Threading a Traverse Track

Cord Draw - Center Draw

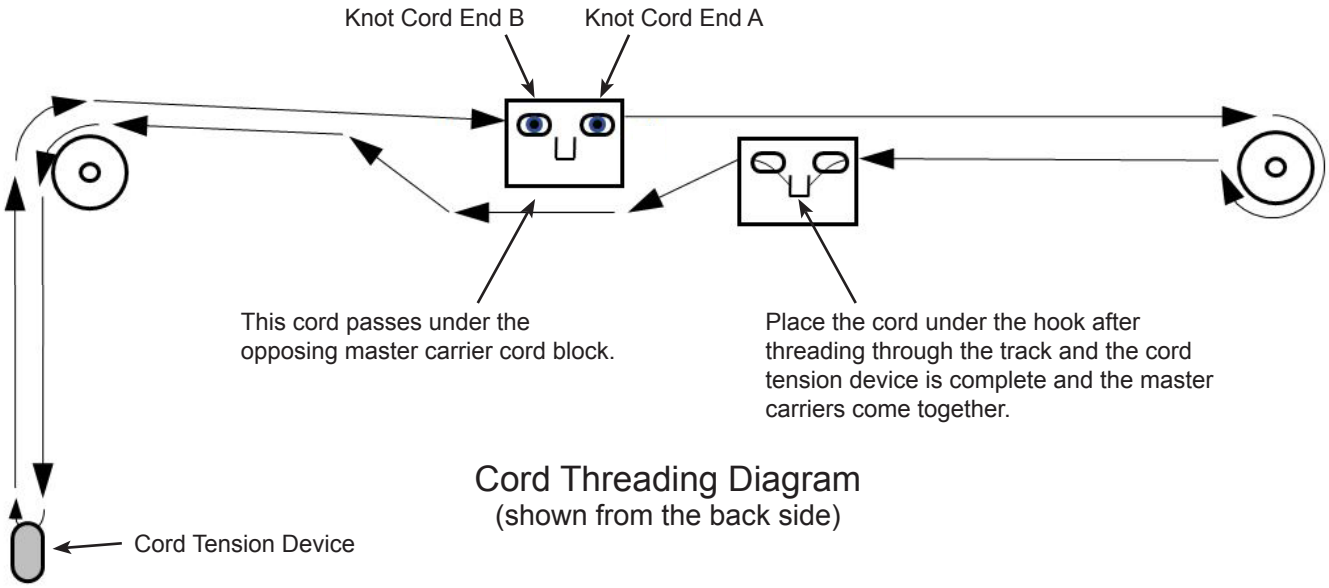

Cord Threading Diagram
(shown from the back side)

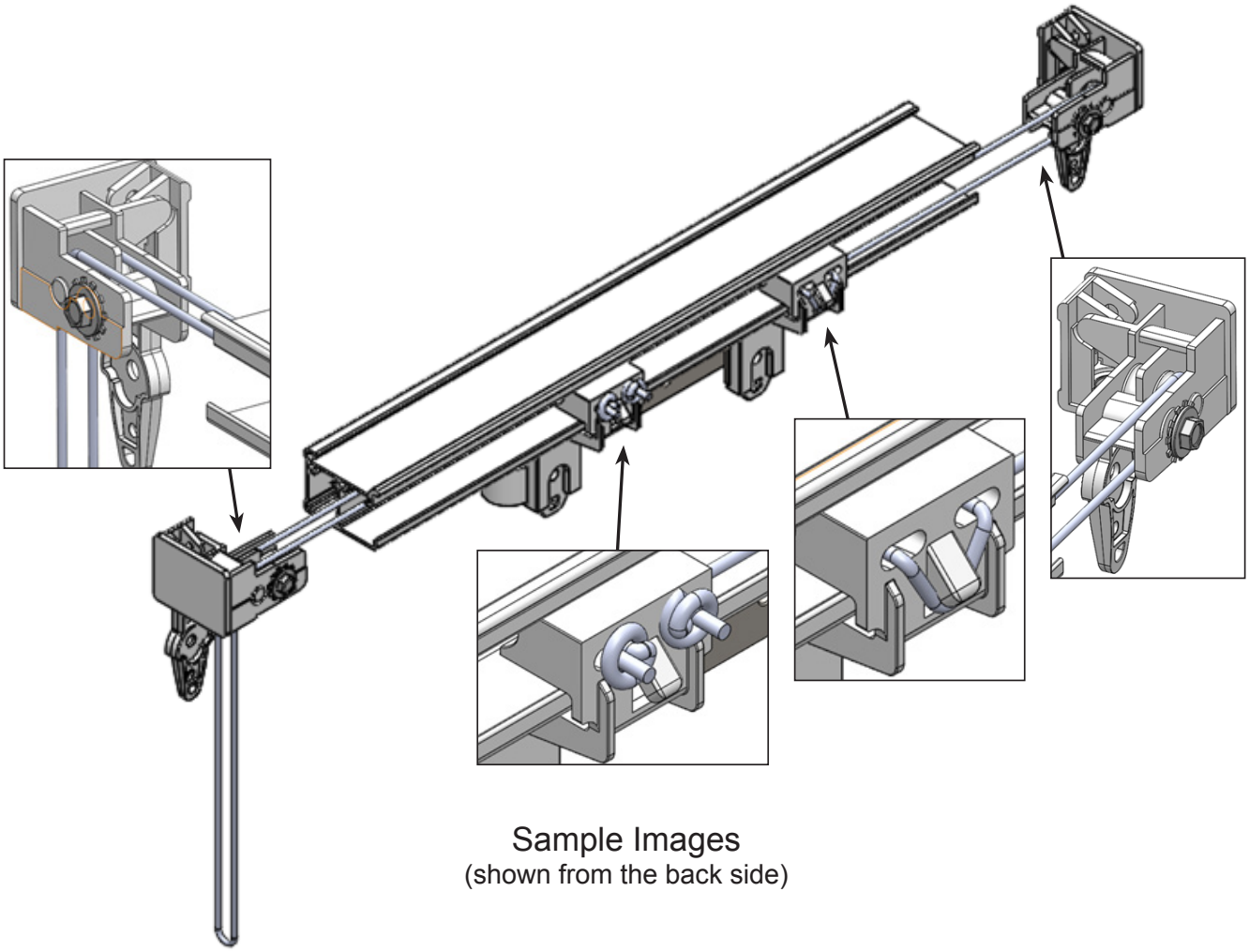

Sample Images
(shown from the back side)

©2017 Rowley Company LLC | All rights reserved.