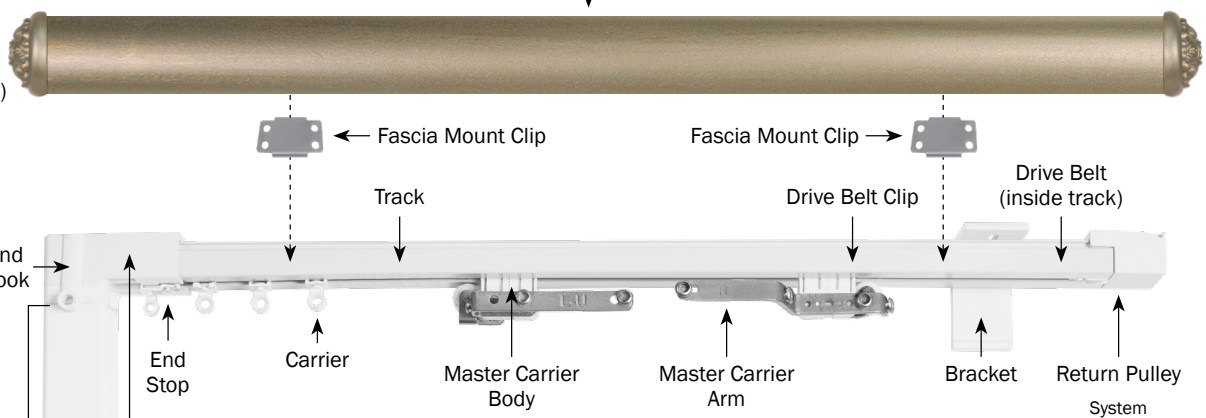

*Tandem alternative option available.

AUTOMATED TRACK FINESTRA® CUSTOM ORDERING INFORMATION

1 SELECT YOUR SYSTEM

Single or double system.

2 SELECT YOUR TRACK COLOR

White or bronze.

3 SELECT YOUR MOTOR POWER

Pick from Li-ion Battery or 110v AC/DC Power Transformer.

4 SELECT YOUR DRAPERY STYLE, DRAW & MASTER CARRIER

Pinch Pleat or Ripplefold. One-Way Draw Right or Left, or Center Draw. Overlap or Butt Master (RF only).

PINCH PLEAT

- Carriers available in White or Bronze.

RIPPLEFOLD

- Carriers available in White or Bronze.
- 60%, 80%, 100% and 120% fullness available; please specify fullness on order.
- Overlap Master Carriers are standard.
- Butt Master Carriers available, allowing some light to filter between draperies on center draw treatments. Must be specified for substitution.

5 SELECT YOUR FINISH, FASCIA STYLE & FINIALS

25 Finishes. Smooth, Reeded or Square Fascia. Finials and End Caps sold separately.

6 SELECT YOUR R-TEC SMART CONTROLS

System includes a Push 5 channel handheld remote with wall mount. Take your drapery control to the next level by upgrading to the R-TEC Hub to integrate your draperies with whole home and voice control systems.