ARIA® 1 3/8" AUTOMATED® H-RAIL TRAVERSE CENTER OR ONE-WAY DRAW SYSTEM INSTALLATION INSTRUCTIONS

Please read all instructions before starting

INTRODUCTION:

The AriA® 1 3/8" Automated H-Rail Traverse Systems are used to electronically control the drapery using a Slim Drapery Motor and Remote Control. By using a Remote Control or the Automate® Pulse 2 App via a smartphone or tablet, the operator can open and close the drapery smoothly and precisely.

The maximum width for this system is 12' continuous (in select finishes) and 24' spliced. The minimum width for this system is 37". The maximum drapery weight is 77 lbs. Single or double system.

BRACKET ASSEMBLY:

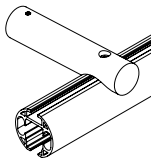

NOTE: The bracket shafts are attached to the track.

The AriA® 1 3/8" Automated H-Rail Traverse Systems can be mounted on the wall or ceiling.

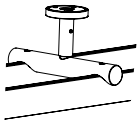

Wall options include single brackets with either a 3 1/2" or 6" projection, or a double bracket with 3" and 7 1/2" projections.

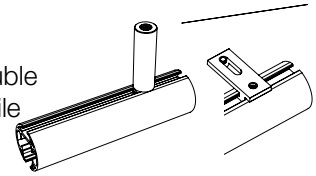

Ceiling options include a single or double bracket with 2 3/8" drop, or a low-profile ceiling bracket with a 5/32" drop.

PARTS LIST:

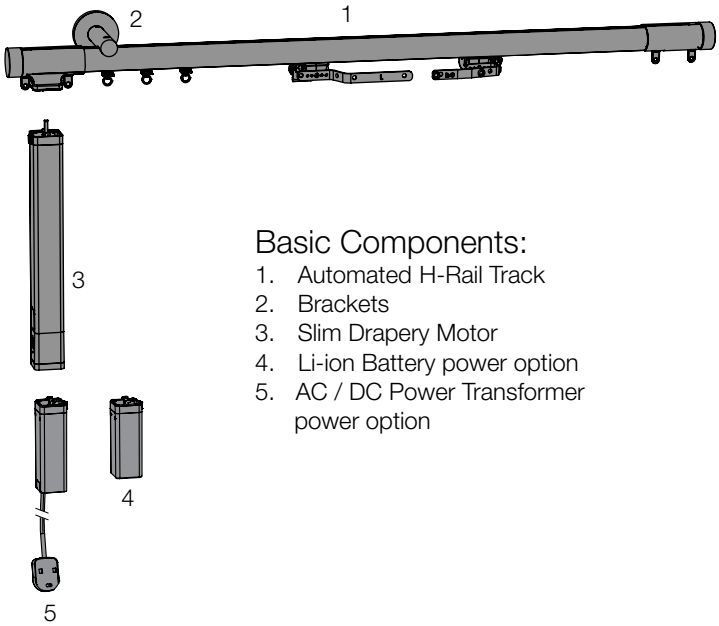

Basic Components:

1. Automated H-Rail Track
2. Brackets
3. Slim Drapery Motor
4. Li-ion Battery power option
5. AC / DC Power Transformer power option

BRACKET PLACEMENT:

It's recommended to use 1 bracket beside each pulley and an adjacent bracket no more than 24" away. On the remaining part of the H-Rail Track, bracket-to-bracket distances should be no more than 48". Also, 1 bracket should be placed on each side of a splice if used.

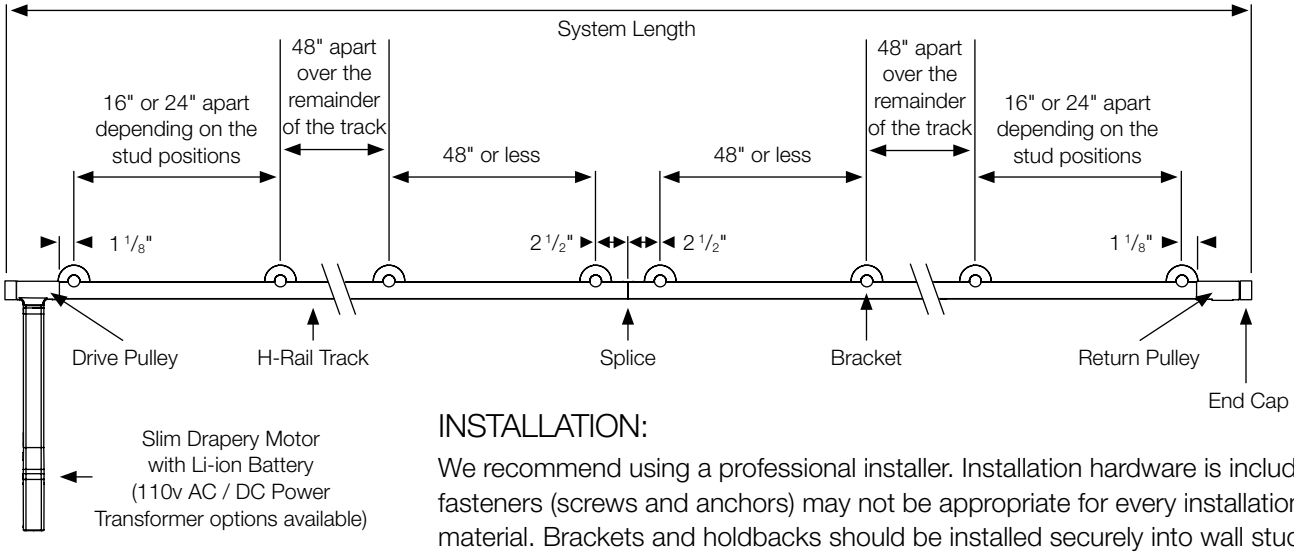

INSTALLATION:

We recommend using a professional installer. Installation hardware is included. The fasteners (screws and anchors) may not be appropriate for every installation or wall material. Brackets and holdbacks should be installed securely into wall studs when possible. AriA® will not assume responsibility for damages incurred by improperly mounted or inadequately supported hardware.

WALL MOUNT TRACK SYSTEM INSTALL:

NOTE: Installer is responsible for determining the correct mounting fastener and wall location per the wall construction type.

Step 1. Locate bracket base plate.

Step 2. Mount wall mount base plate to wall.

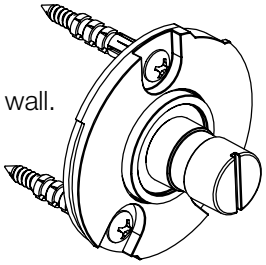

Step 3. Locate bracket base cover. Place cover over wall mount base plate. Turn cover clockwise to lock in place.

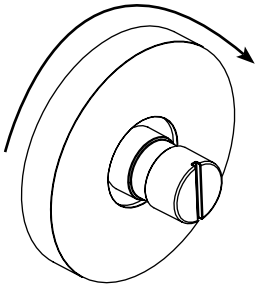

Step 4. Locate track system. Place track system onto the wall mount base plates.

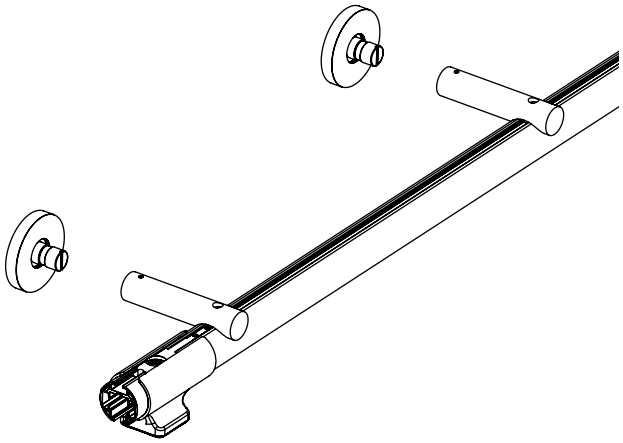

Step 5. Tighten all wall mount stems with set screw located above the wall mount cover.

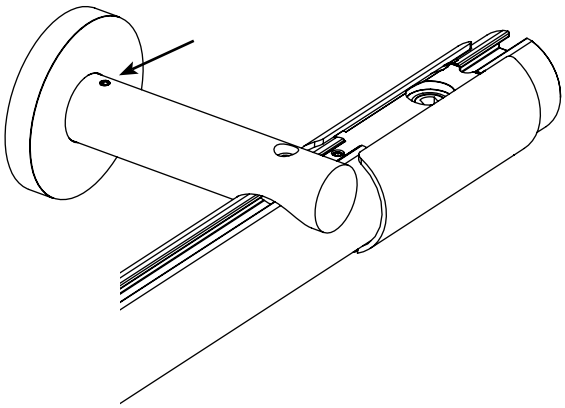

CEILING MOUNT TRACK SYSTEM INSTALL:

NOTE: Installer is responsible for determining the correct mounting fastener and wall location per the wall construction type.

Step 1. Locate ceiling plate.

Step 2. Mount ceiling plate to ceiling.

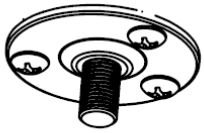

Step 3. Locate ceiling bracket cover. Place cover over the ceiling plate.

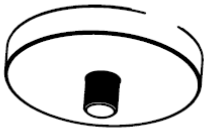

Step 4. Locate the insert. Screw the insert on the ceiling plate.

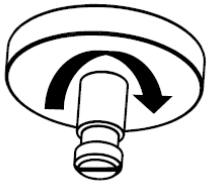

Step 5. Locate track system. Place track system onto the ceiling mount inserts.

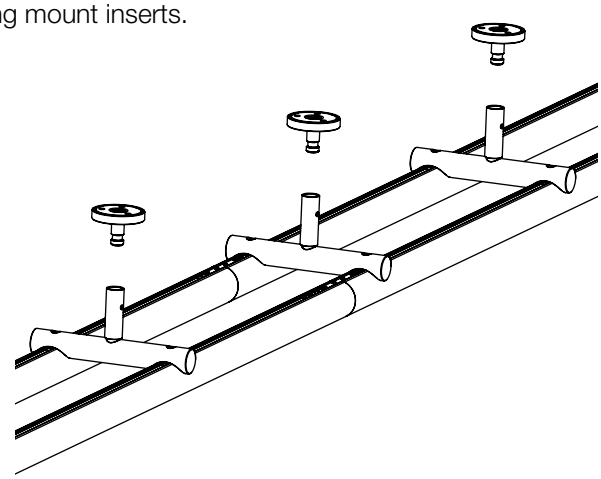

Step 6. Tighten all ceiling mount stems with set screw located close to the ceiling mount cover.

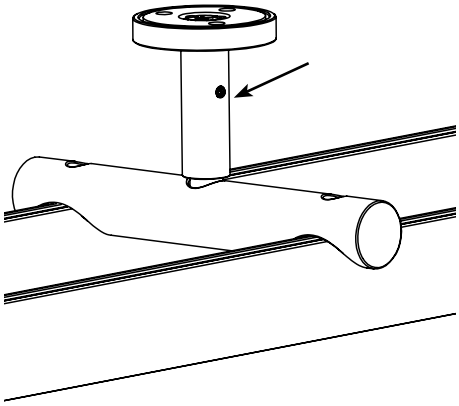

LOW-PROFILE CEILING BRACKET TRACK SYSTEM INSTALL:

NOTE: Installer is responsible for determining the correct mounting fastener and wall location per the wall construction type.

Step 1. Locate track system and mount it to the ceiling.

NOTE: The Low-Profile Ceiling Mount Bracket is already attached to the track.

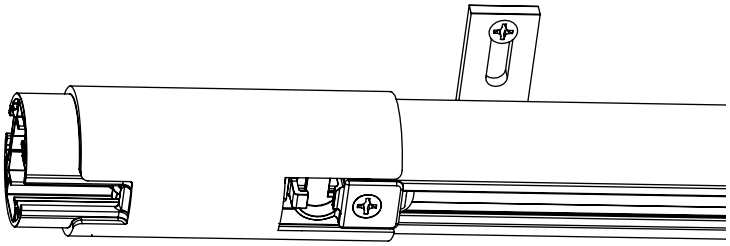

NOTE: Carriers can be added or removed with the Drive Pulley installed by removing the End Stop.

Install the Pendant into the End Stop.

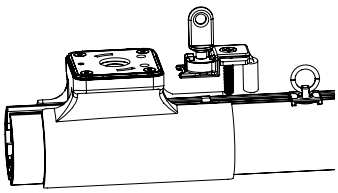

PINCH PLEAT

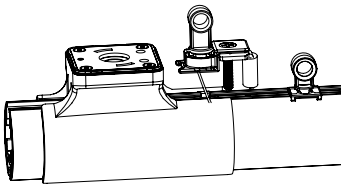

RIPPLEFOLD

Install the End Stop.

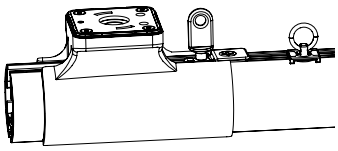

PINCH PLEAT

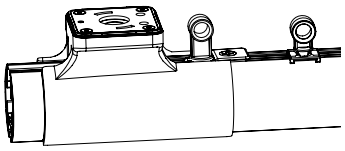

RIPPLEFOLD

How to get started using your AriA® 1 3/8" Automated H-Rail Traverse System:

- Please read all the instructions provided with your Slim Drapery Motor.
- Your motor will be shipped in “sleep mode” and must be woken up before using.
- You will need a remote control or a smartphone to set up and control your Slim Drapery Motor.
- Only use power options for your motor that are available through Rowley Company.