WOOD HARDWARE
Installation Instructions

Threading a Traverse Track | Cord Draw - One Way Draw

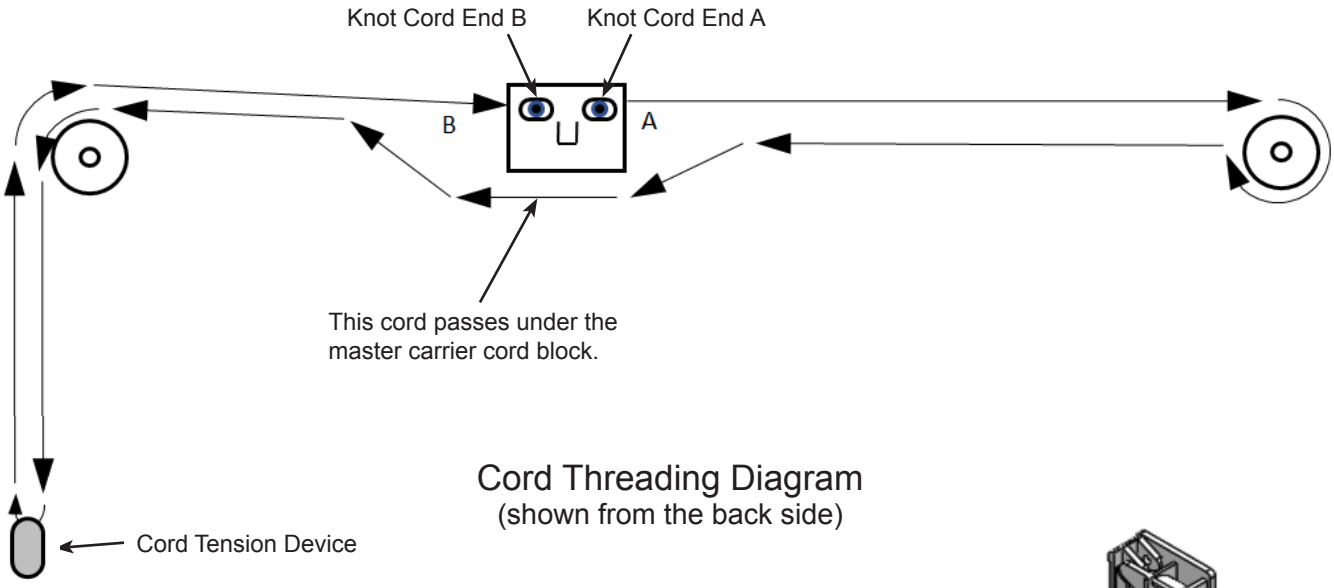

Cord Threading Diagram
(shown from the back side)

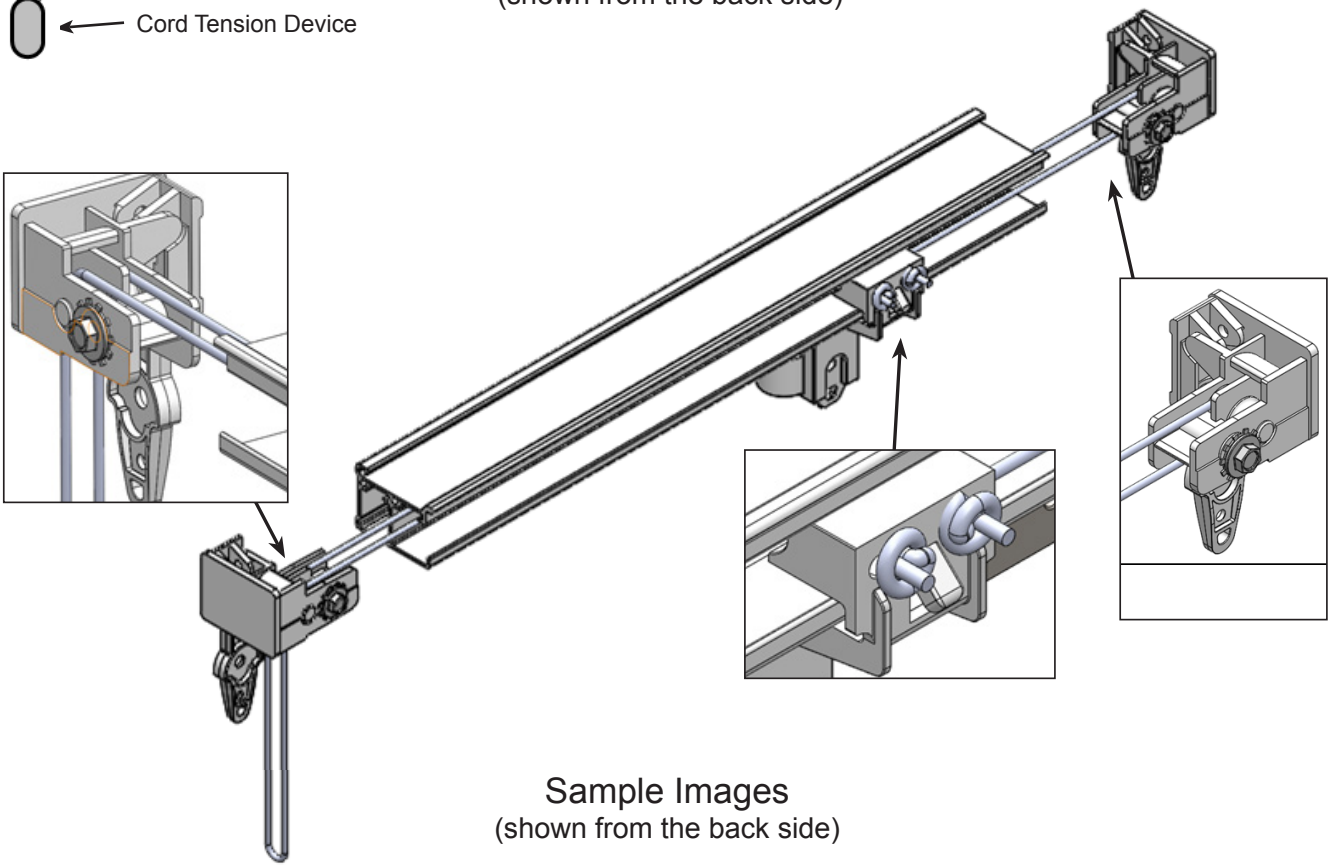

Sample Images
(shown from the back side)

Finestra® is a registered trademark of Rowley® Company, LLC. All products and designs are © 2017, Rowley® Company, LLC.