Café Rod Collection

INSTALLATION INSTRUCTIONS

Thank you for purchasing your new Café Rod Drapery System. With proper installation and care, they will provide you with many years of beauty and trouble-free use. Clean with a soft cloth. Do not use harsh or abrasive cleaning supplies or polishes which may damage the finish.

TOOLS NEEDED

- Tape Measure
- Phillips screwdriver
- Pencil
- Drill with 3/16" drill bit to pre-drill for plastic expansion anchors
- Level (recommended)
- Rod Cutting: Tubing cutter
- Splice: Deburr tool

Decorative Rods – ½"

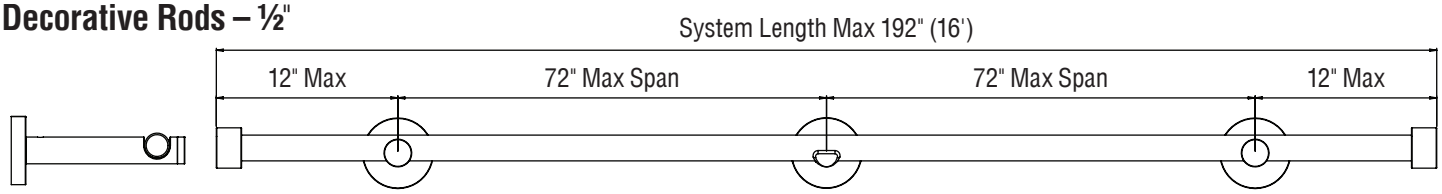

The ½" Cafe Rod requires two brackets at each end. For determining additional brackets between spans use the charts below. Max span Length 72". For spliced systems, an additional bracket is required at the connection joint.

Rod Cutting

The Café Rod can be cut to size on site if needed. It is recommended to use a tubing or pipe cutter with a blade intended for cutting through steel.

For spliced rods, it is required to deburr the inside edge of the cut end of the rod. The splice needs a smooth opening to be properly inserted into the rod.

Bracket Requirements and Maximum Panel Weight for 36" Spans

System Length	# of Brackets	Description	One Way Draw Panel Weight	Center Draw Panel Weight
Up to 36"	2	Two end brackets	1.67lb/ft	1.67lb/ft
36"-72"	3	One center support, two end brackets	1.67lb/ft	1.67lb/ft
72"-108"	4	Two center supports, two end brackets	1.67lb/ft	1.67lb/ft
108"-144"	5	Three center supports, two end brackets	1.67lb/ft	1.67lb/ft
144"-180"	6	Four center supports, two end brackets	1.67lb/ft	1.67lb/ft
180"-192"	7	Five center supports, two end brackets	1.67lb/ft	1.67lb/ft

Bracket Requirements and Maximum Panel Weight for 48" Spans

System Length	# of Brackets	Description	One Way Draw Panel Weight	Center Draw Panel Weight
Up to 48"	2	Two end brackets	0.75lb/ft	0.75lb/ft
48"-96"	3	One center support, two end brackets	0.75lb/ft	0.75lb/ft
96"-144"	4	Two center supports, two end brackets	0.75lb/ft	0.75lb/ft
144"-192"	5	Three center supports, two end brackets	0.75lb/ft	0.75lb/ft

Bracket Requirements and Maximum Panel Weight for 60" Spans

System Length	# of Brackets	Description	One Way Draw Panel Weight	Center Draw Panel Weight
Up to 60"	2	Two end brackets	0.4lb/ft	0.4lb/ft
60"-120"	3	One center support, two end brackets	0.4lb/ft	0.4lb/ft
120"-180"	4	Two center supports, two end brackets	0.4lb/ft	0.4lb/ft
180"-192"	5	Three center supports, two end brackets	0.4lb/ft	0.4lb/ft

Bracket Requirements and Maximum Panel Weight for 72" Spans

System Length	# of Brackets	Description	One Way Draw Panel Weight	Center Draw Panel Weight
Up to 72"	2	Two end brackets	.17lb/ft	.17lb/ft
72"-144"	3	One center support, two end brackets	.17lb/ft	.17lb/ft
144"-192"	4	Two center supports, two end brackets	.17lb/ft	.17lb/ft

AriA®
Metal Hardware

REVISED 10/2026

Wall Mount Installation — End Brackets

STEP 1: PLAN PLACEMENT

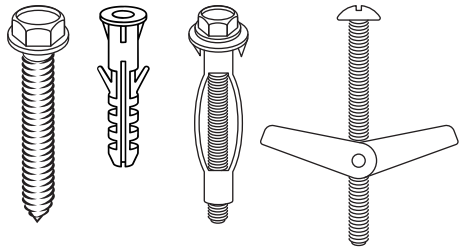

Gather all brackets and select the correct anchors for your wall type. Start with the two end brackets. Set the height and width based on the drapery measurements, allowing room for end caps/finials. For best results, place brackets 2"-4" beyond the window frame.

STEP 2: MARK THE WALL

Loosen the upper set screw to remove the bracket arm. This separates the arm from the decorative cover and mounting base. Hold the mounting base against the wall and use it as a template to mark the screw holes.

ILLUS 1A:

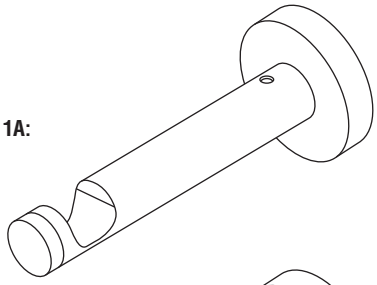

ILLUS 1B:

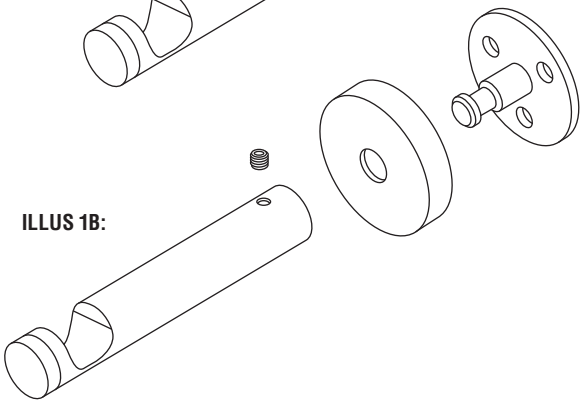

STEP 3: ATTACH THE MOUNTING BASE

Pre-drill the marked holes:

- Plastic expansion anchors: 3/16" bit
- Wood studs or trim: 3/32" bit

Attach the mounting base with the screws provided.

STEP 4: ATTACH THE BRACKET ARM

Slide the decorative cover and bracket arm back onto the mounting base, with the open cradle facing up. Tighten the set screw to secure.

Center Brackets

STEP 5: INSTALL CENTER SUPPORTS

For spans longer than 72", install center brackets the same way as the end brackets. Make sure they are level with the end brackets.

STEP 6: SPACE CENTER SUPPORTS EVENLY

- One center support: Center it between the two end brackets.
- Two or more: Space them evenly between the end brackets.

TIP: For draperies that open and close fully, use bypass support brackets with C-rings. They allow the rings to pass over the center supports.

Rings, Rod, and Finials

STEP 7: ADD RINGS OR DRAPERY

Slide the rings onto the rod or slide the drapery treatment directly onto the rod.

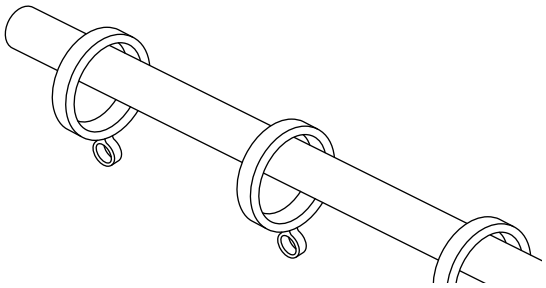

STEP 8 : SET THE ROD IN THE BRACKETS

Unscrew the decorative cap on each bracket and loosen the set screw. Set the rod into the cradles, tighten the set screws, then replace the caps.

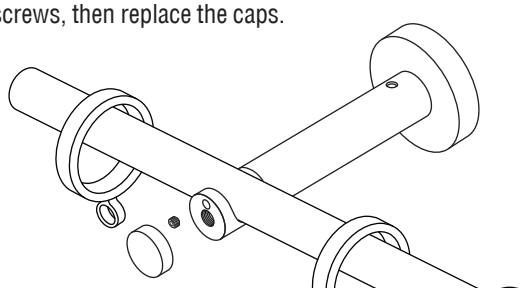

STEP 9: ATTACH END CAPS OR FINIALS

Slide an end cap or finial onto each end of the rod and tighten the set screw.

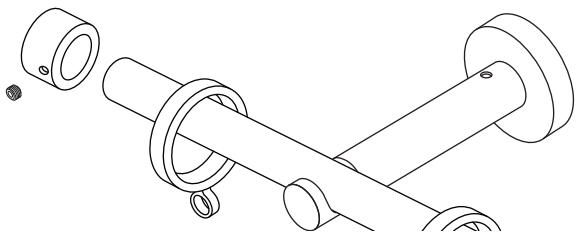

AriA®
Metal Hardware

Inside Mount Installation

STEP 1: PLAN PLACEMENT

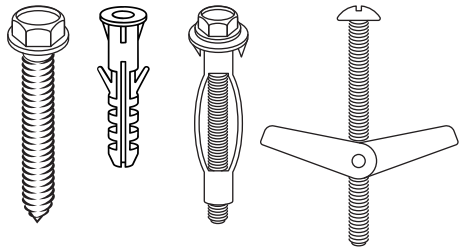

Gather all brackets and select the correct anchors for your wall type. Start with the two end brackets. Set the height and width based on the drapery measurements.

STEP 2: ATTACH THE FIRST BRACKET
Mount the first inside mount bracket at the desired height and projection. If the span is longer than 72" and needs a center support, align all brackets at the same height and projection.



STEP 3: ATTACH THE SECOND BRACKET
Mount the second bracket on the opposite wall, matching the height and projection of the first.

STEP 4: CUT THE ROD TO LENGTH
Measure between the two mounting surfaces and subtract ½". Cut the rod to that length.

Example:
Wall-to-wall distance is 72" (6')
Cut the rod to 71 ½" (5' 11 ½")

STEP 5: LOAD THE ROD
Slide the rings, grommets, or drapery onto the rod first. Then slide an inside mount cover onto each end.

STEP 6: SET THE ROD
Place each end of the rod into an inside mount bracket.

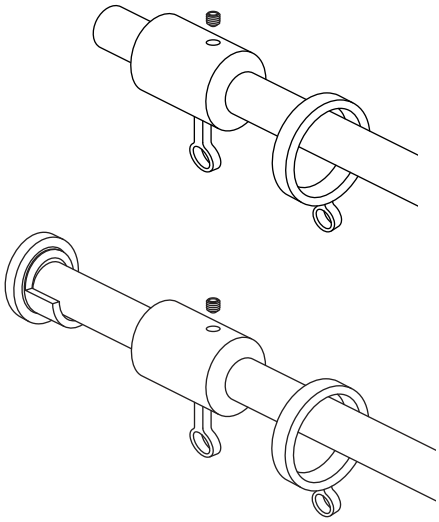

STEP 7: SECURE THE ROD
Slide each cover over its bracket. Tighten the set screw to lock the rod in place.

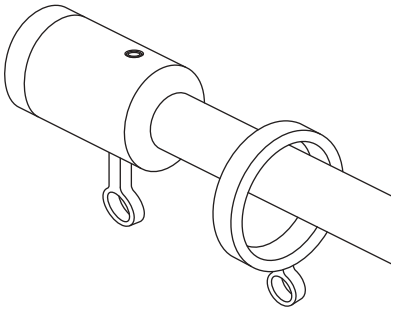

STEP 8: USE THE DRAPERY EYELET (OPTIONAL)
Each inside mount bracket includes a drapery eyelet. Hook the end of the panel to it to keep the panel in place and reduce light gaps at the sides. The eyelet unscrews if you prefer not to use it.

AriA®
Metal Hardware

Ceiling Mount Installation

Important: *Rings and grommets cannot pass over ceiling brackets. If you use one or more center ceiling brackets, the draperies will not open or close fully.*

STEP 1: PLAN PLACEMENT

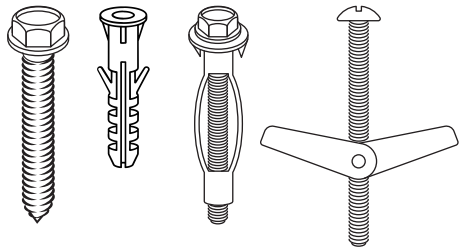

Gather all brackets and select the correct anchors for your ceiling type. Start with the two end brackets. Set the position and projection from the wall based on the drapery measurements, allowing room for finials/endcaps. For best results, place brackets 2"-4" beyond the window frame.

STEP 2: MARK THE CEILING

Loosen the upper set screw to remove the bracket arm. This separates the arm from the decorative cover and mounting base. Hold the mounting base against the ceiling and use it as a template to mark the screw holes.

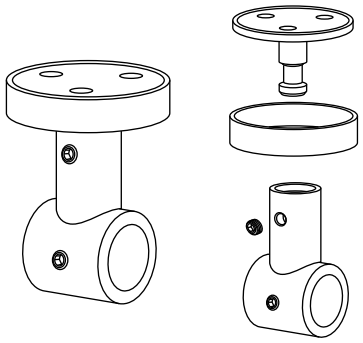

STEP 3: ATTACH THE MOUNTING BASE

Pre-drill the marked holes:

- Plastic expansion anchors: 3/16" bit
- Ceiling joists or wood framing: 3/32" bit

Attach the mounting base with the screws provided.

STEP 4: INSTALL CENTER BRACKETS

For spans longer than 72", install center ceiling brackets the same way as the end brackets. Make sure they line up with the end brackets.

STEP 5: SPACE CENTER BRACKETS EVENLY

- One center support: Center it between the two end brackets.
- Two or more: Space them evenly between the end brackets.

STEP 6: ADD RINGS OR DRAPERY

Slide the rings onto the rod or slide the drapery treatment directly onto the rod.

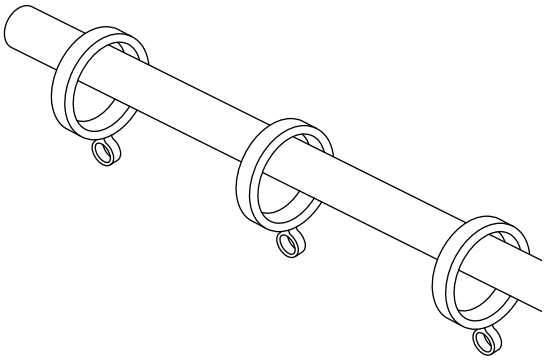

STEP 7: ADD THE BRACKET ARMS

Slide the ceiling bracket arms onto each end of the rod.

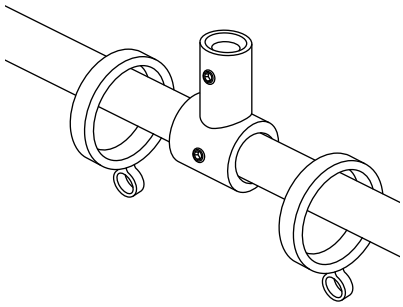

STEP 8: ATTACH END CAPS OR FINIALS

Slide an end cap or finial onto each end of the rod and tighten the set screw.

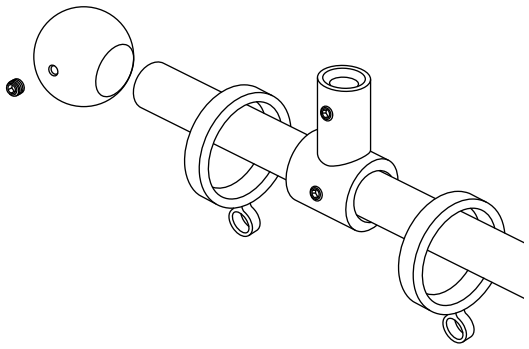

AriA®
Metal Hardware

STEP 9: CONNECT TO THE CEILING MOUNTS

Fit each bracket arm and decorative cover onto its ceiling mounting base. Tighten the upper set screw with the included Allen wrench.

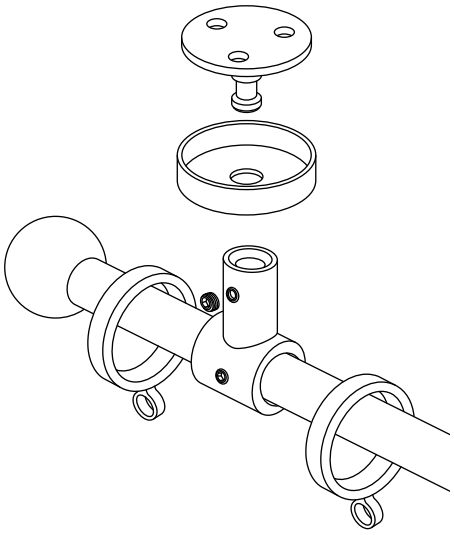

STEP 10: SECURE THE ROD

Tighten the lower set screw on each bracket arm to lock the rod in place.

