KID TRAX®

POLICE TRIKE

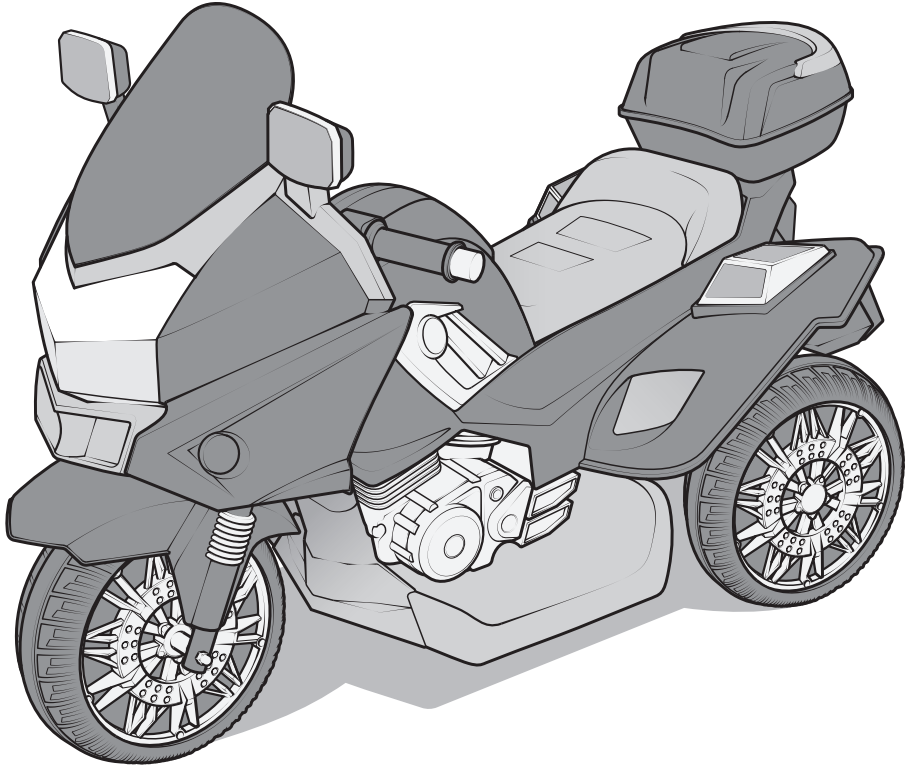

KT1244 AND 04KT1244

OWNER'S MANUAL

Age: 3 - 7 yrs
Weight: Maximum 27 Kgs (60 lbs)
Max Speed: 2.5 MPH
Battery: 6V7AH

Always use with adult supervision.
Keep instructions for future reference.

1 Safety

PARENTAL AND ADULT RESPONSIBILITIES

⚠ WARNING!

- Use of this product without parental and/or adult supervision could result in serious injury or death. Parents and/or adults supervising a child's use of this product must read and understand the warnings and instructions included in this manual before allowing a child to use the product.
- Use of this product by a child that does not have the physical (i.e., strength, coordination) or intellectual maturity (i.e., judgment, understanding) to use the product could result in serious injury or death. Parents and/or adults supervising a child's use of this product must determine if a child has both the physical and intellectual maturity to use this product before a child uses the product. Do not allow the use of this product by a child who does not have the physical or intellectual maturity to use the product.
- Use of this product by children unfamiliar with the safety hazards, operation, and handling of the product could result in serious injury or death. Parents and/or adults supervising a child's use of the product must insure the child does not allow the use of the product by another child who is unfamiliar with the safety hazards, operation, and handling of the product.

USER REQUIREMENTS AND WARNINGS

Age	3 - 7 yrs
Max Weight	27 kgs (60 lbs)

Before using the vehicle the child should understand the vehicle controls and safety issues. They must also demonstrate the capability to handle the vehicle and operate its controls. It is the responsibility of the adult to educate the child and supervise the vehicles use. Read the following safety warnings to any child using the vehicle before riding.

⚠ WARNING!

- Never leave child unattended. Always supervise the child.
- Always sit in the seat when using the vehicle.
- Keep your hands, hair and clothes away from moving parts.
- Always wear shoes when using the vehicle.
- Only one rider is allowed on the vehicle at a time
- Children under 3 years of age cannot use the vehicle.
- Only drive on level ground.
- Do not go near swimming pools or other bodies of water, drop-offs or up and down steep inclines.
- Do not drive the vehicle into loose dirt, mud, sand or fine gravel.
- Do not drive the vehicle on streets or near cars.

⚠ WARNING!

The owner's manual contains assembly, use and maintenance instructions. The vehicle must be assembled by an adult who has read and understands the instructions in this manual. Keep the packaging away from children and dispose of all packaging before use.

Note: For best performance use on flat, hard surfaces.

The following safety hazards may result in serious injury or death to the user of the vehicle:

- This product contains small parts that are for adult assembly only. Keep small children away when assembling. Remove and dispose of all protective material and poly bags before assembly. Be sure to remove all packaging materials and parts from underneath the vehicle body.
- Body parts such as hands, legs, hair and clothing can get caught in moving parts. Never place a body part near a moving part or wear loose clothing while using the vehicle. Always wear shoes when using the vehicle.
- Using the vehicle near streets, motor vehicles, drop-offs such as: steps, water (swimming pools) or other bodies of water, sloped surfaces, hills, wet areas, flammable vapors, in alleys, at night or in the dark could result in an unexpected accident. Always use the vehicle in a safe, secure environment with continuous adult supervision.
- Using the vehicle in unsafe conditions such as snow, rain, loose dirt, mud, sand or fine gravel may result in unexpected action such as tip over and skidding, and damage to the electrical system and battery.
- Using the vehicle in an unsafe manner. Examples include but are not limited to:
  - **a.** Pulling the vehicle with another vehicle or similar device
  - **b.** Allowing more than one rider
  - **c.** Pushing the user from the back
  - **d.** Traveling at an unsafe speed

Always use common sense and safe practices when using the vehicle

BATTERY WARNINGS

⚠ WARNING!

The following safety hazards may result in serious injury or death to the user of the vehicle:

- Use of a battery or charger other than the supplied 6V rechargeable battery and charger may cause a fire or explosion. Only use the supplied 6V rechargeable battery and charger with the vehicle.
- Using the 6V rechargeable battery and charger for any other product may result in overheating, fire or explosion. Never use the 6V rechargeable battery and charger with another product.
- Explosive gases are created during charging. Charge the battery in a well ventilated area. Do not charge the battery near heat or flammable materials.
- Contact between the positive and negative terminals may result in fire or explosion. Avoid direct contact between the terminals. Picking up the battery by the wires or charger can cause damage to the battery and may result in a fire. Always pick up the battery by it's case or handles.

- Liquids on the battery may cause fire or electric shock. Always keep all liquids away from the battery and keep the battery dry.

- Contact or exposure to battery leakage (lead acid) may cause serious injury. If contact or exposure occurs immediately call your physician. If the chemical is on the skin or in the eyes, flush with cool water for 15 minutes. If the chemical was swallowed, immediately give the person water or milk. Do not give water or milk if the patient is vomiting or has a decreased level of alertness. Do not induce vomiting.

- Tampering or modifying the electric circuit system may cause a shock, fire or explosion and permanently damage the system. Exposed wiring, circuitry in the charger may cause electric shock. Always keep the charger housing closed.
- Plug wall charger directly into a wall outlet. Do not use an extension cord when charging.

RE-CHARGE INTERVAL AND TIME

Important!

- Damage to the battery may occur if it is allowed to drain completely. Do not allow the battery to drain completely.
- Check the battery and charger (supply cord, connector) for wear and damage before charging. Do not charge the battery if damage has occurred.
- Only an adult who has read and understands the safety warnings should handle, charge and recharge the battery.
- On average you will need to charge the battery between 10 and 12 hours. Do not charge the battery for more than 24 hours. Failure to charge the battery as directed could cause permanent damage to the battery and void the warranty.

PRODUCT CARE

Notice

- Park the vehicle indoors or cover it with a tarp to protect it from wet weather.
- Do not leave the vehicle in the sun for long periods of time or fading may occur. Store in shade or cover with tarp.
- Do not wash the vehicle with a hose.
- Do not wash the vehicle with soap and water.

❷ Parts

HARDWARE

x1

x4

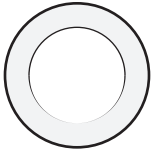
x8

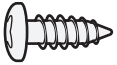
x2

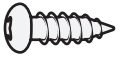
x10

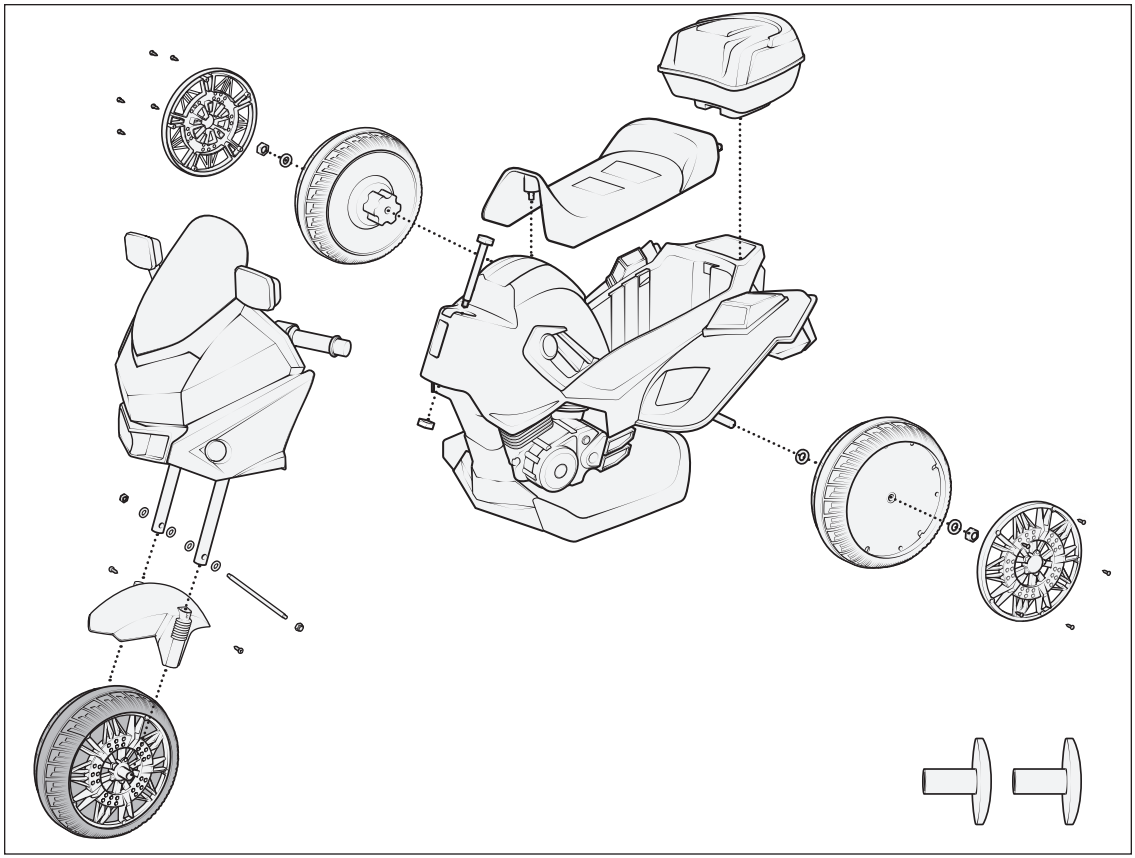

❸ Assembly

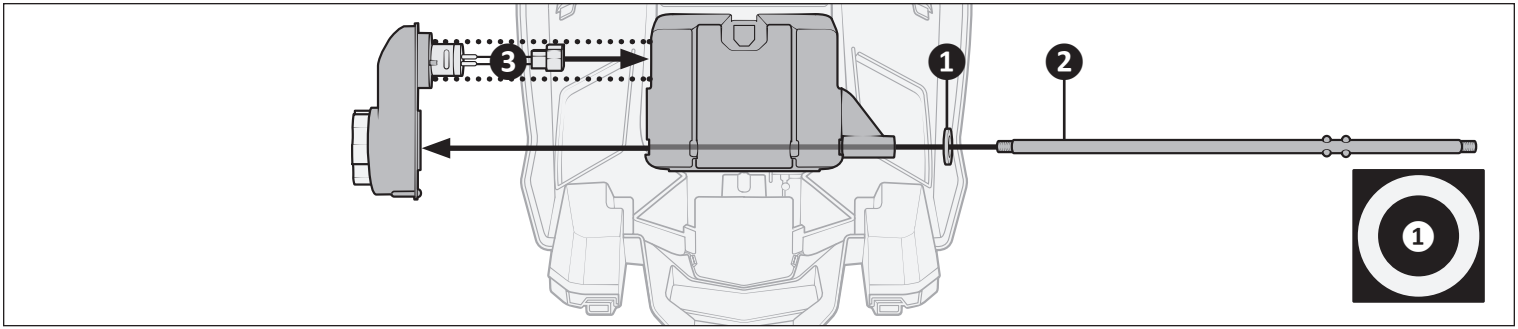

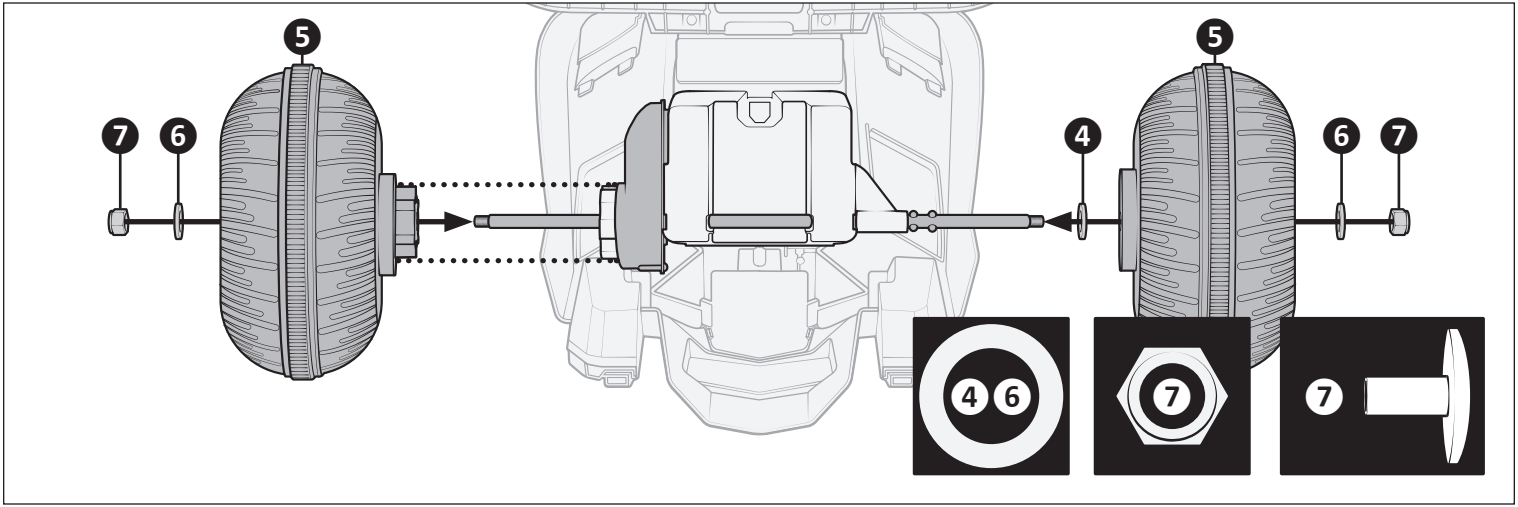

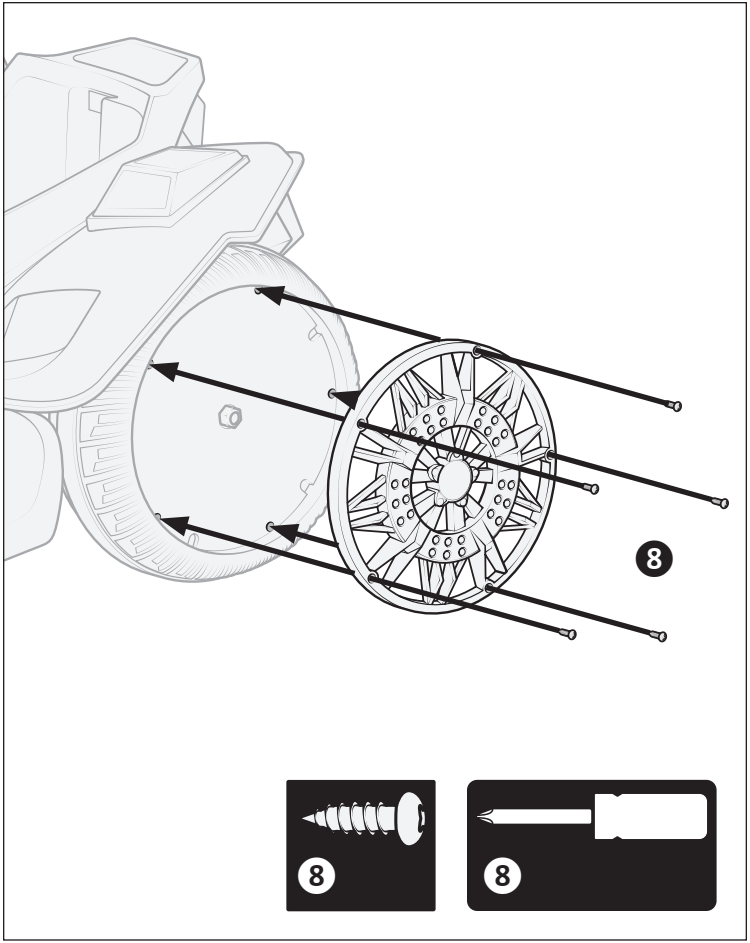
8
8
8

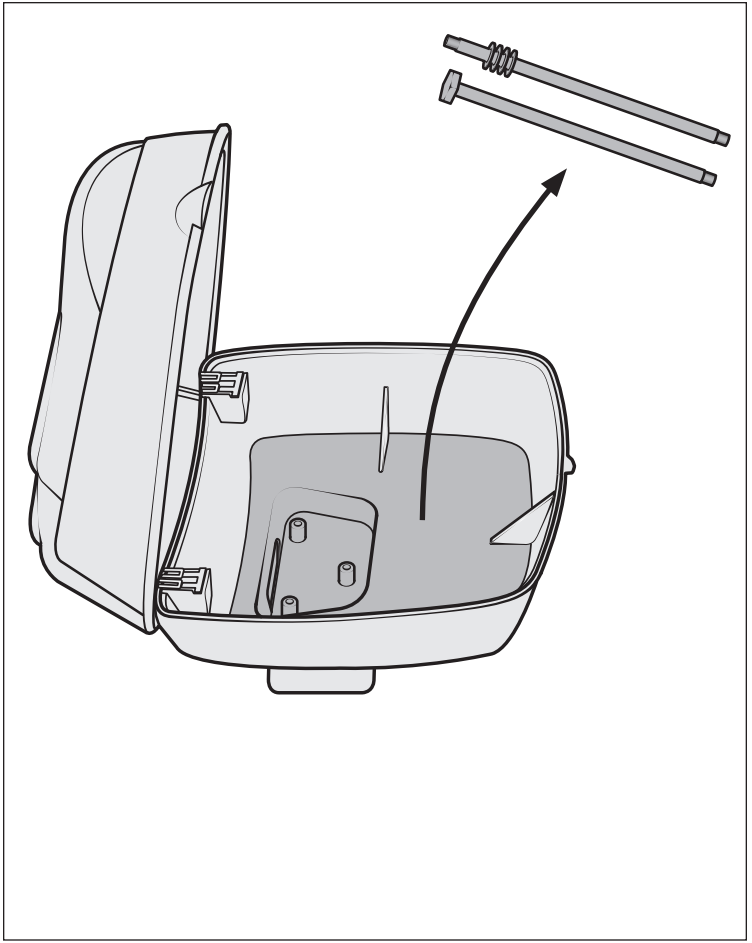

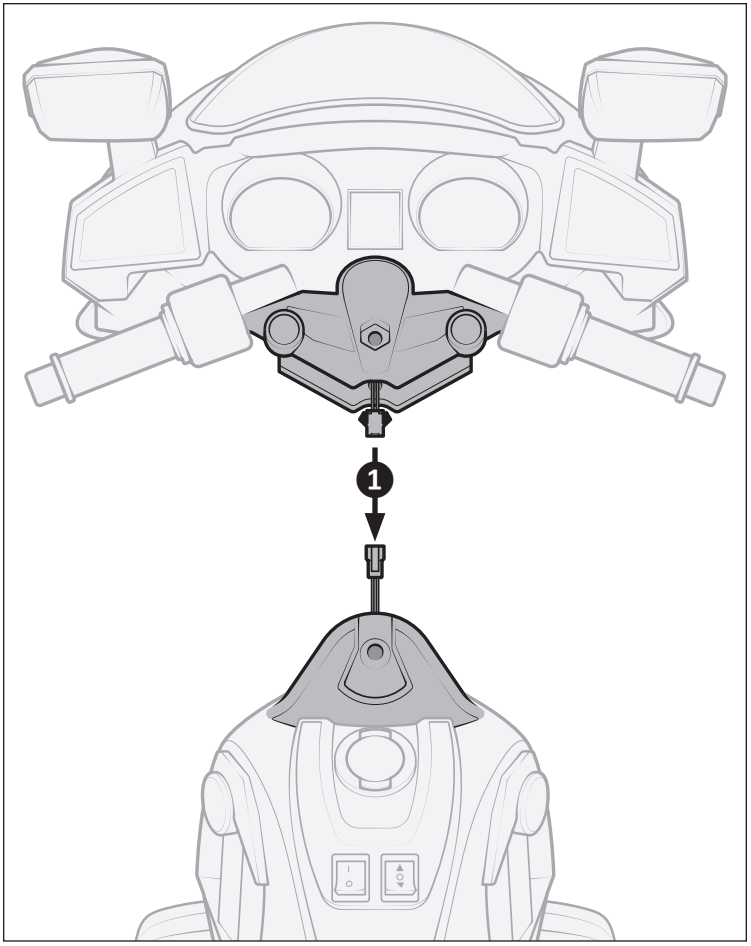
1

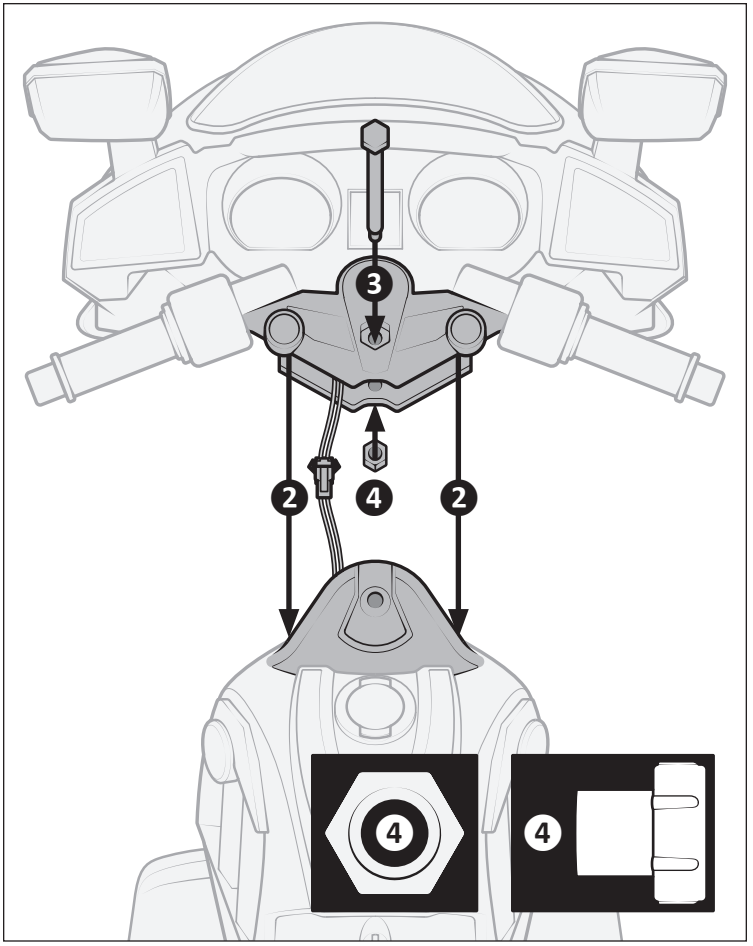
3
2
4
2
4
4

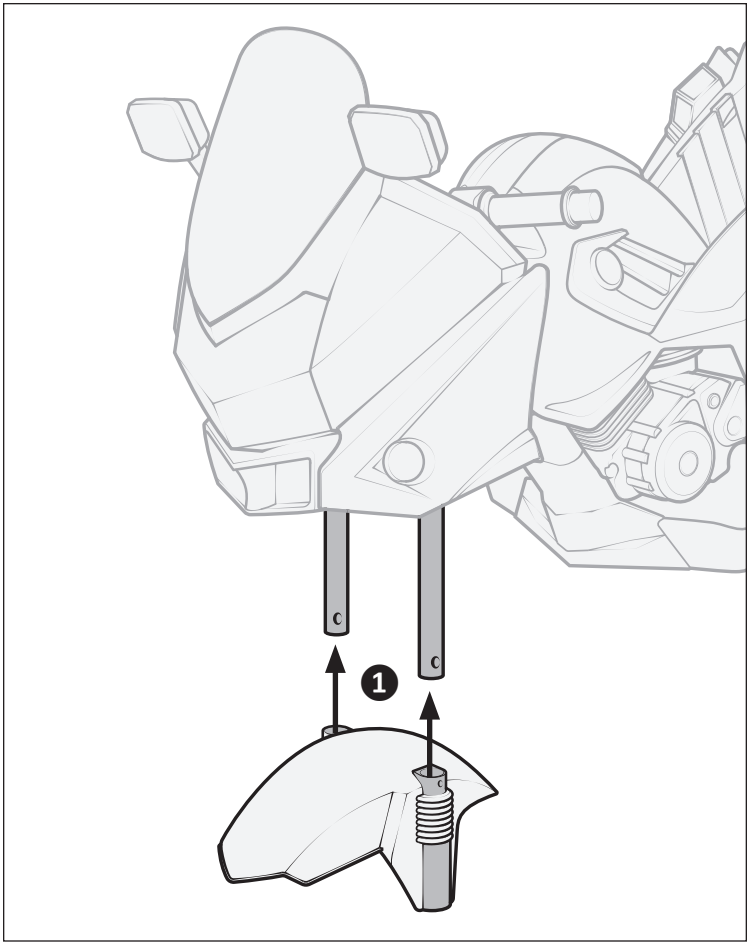
1

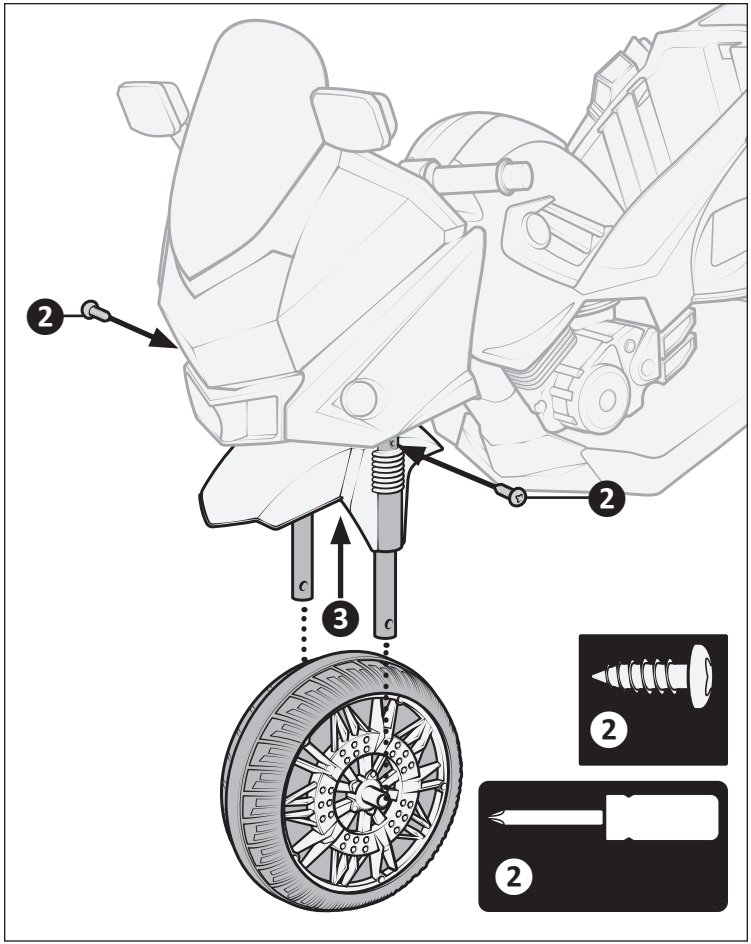
2
2
3
2
2

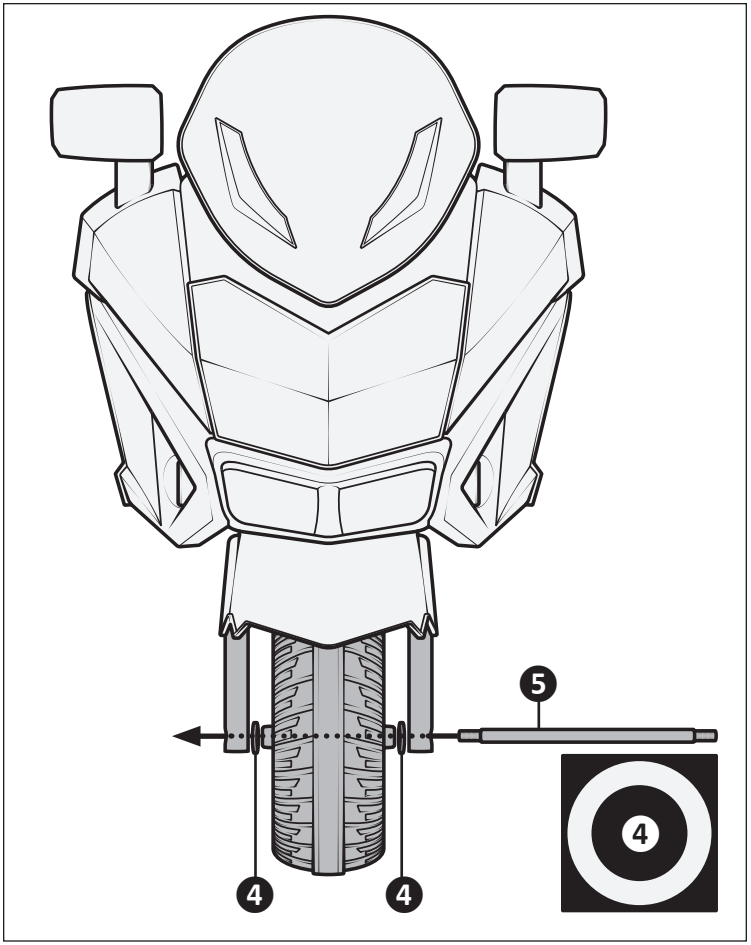
5
4
4
4

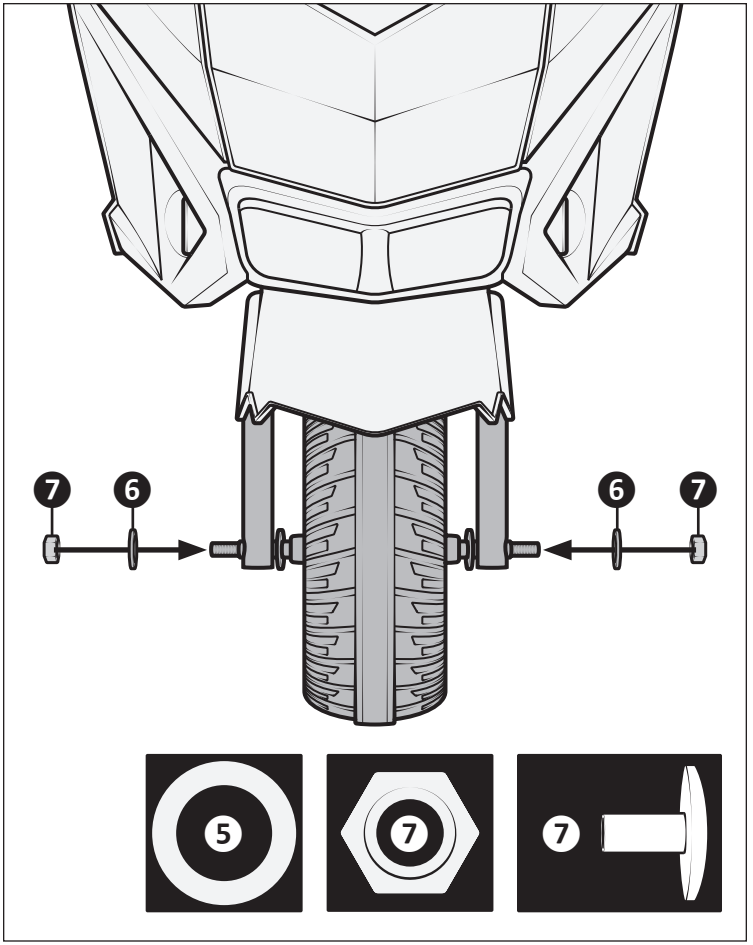
7
6
6
7
5
7
7

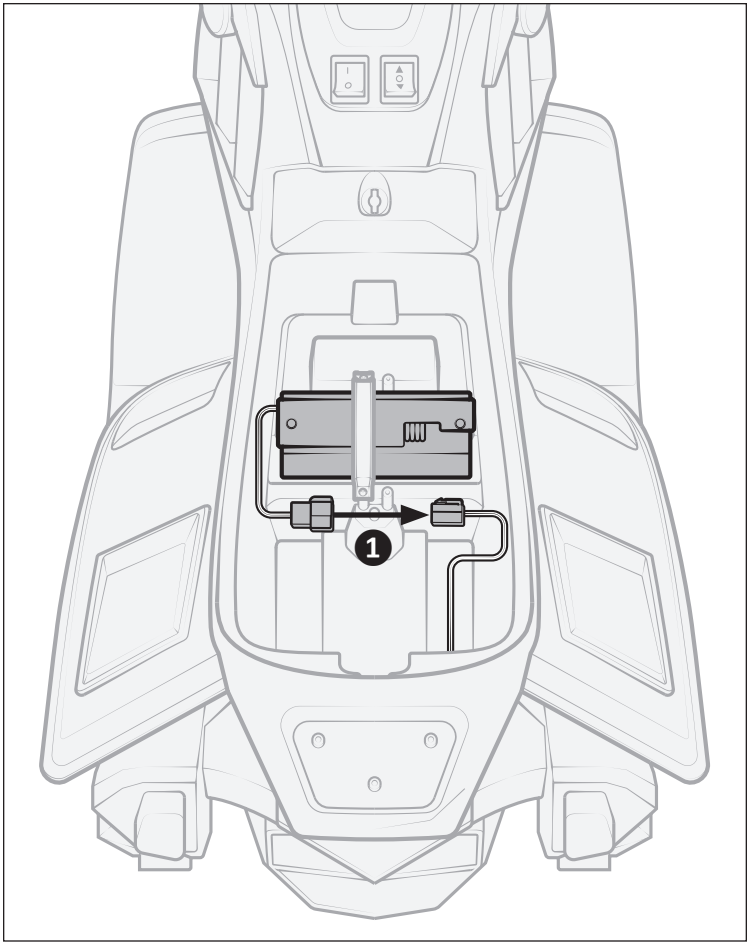
1

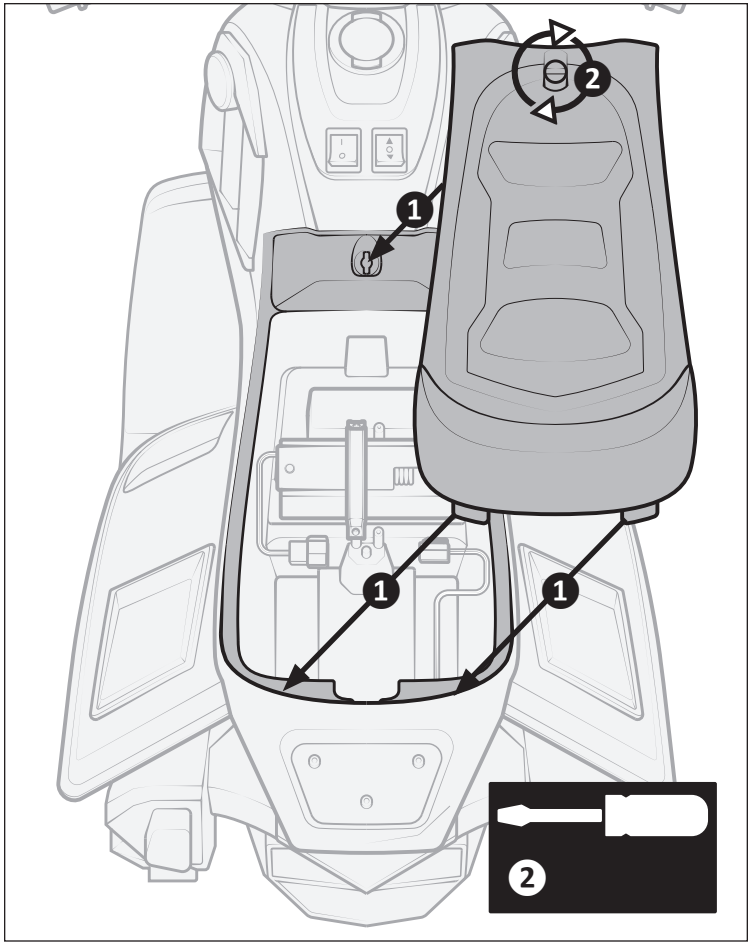
2
1
1
1
2

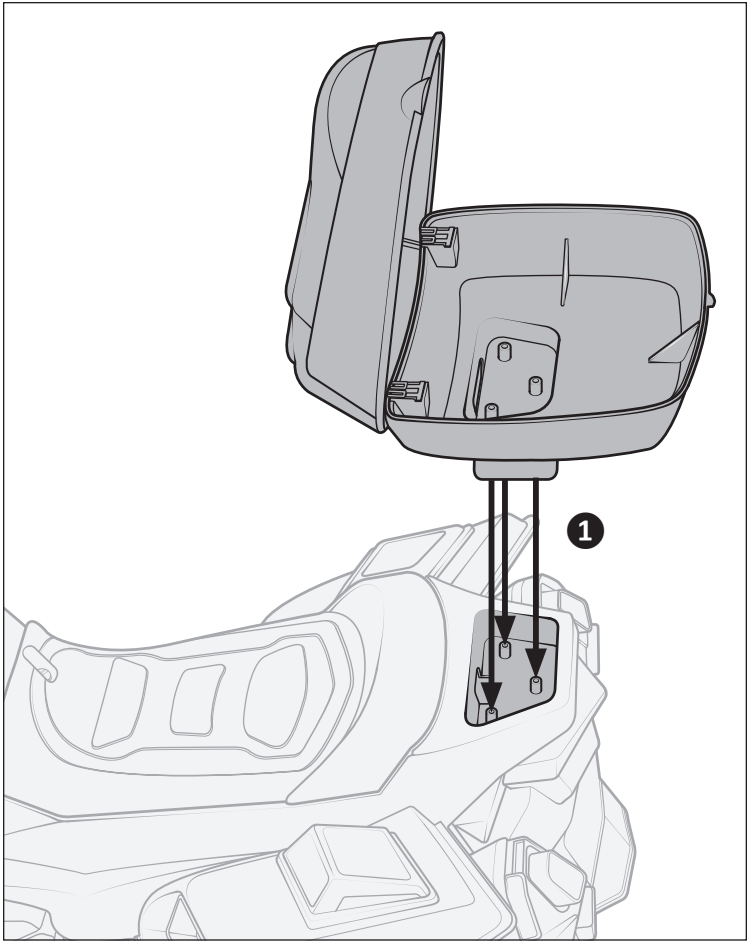
1

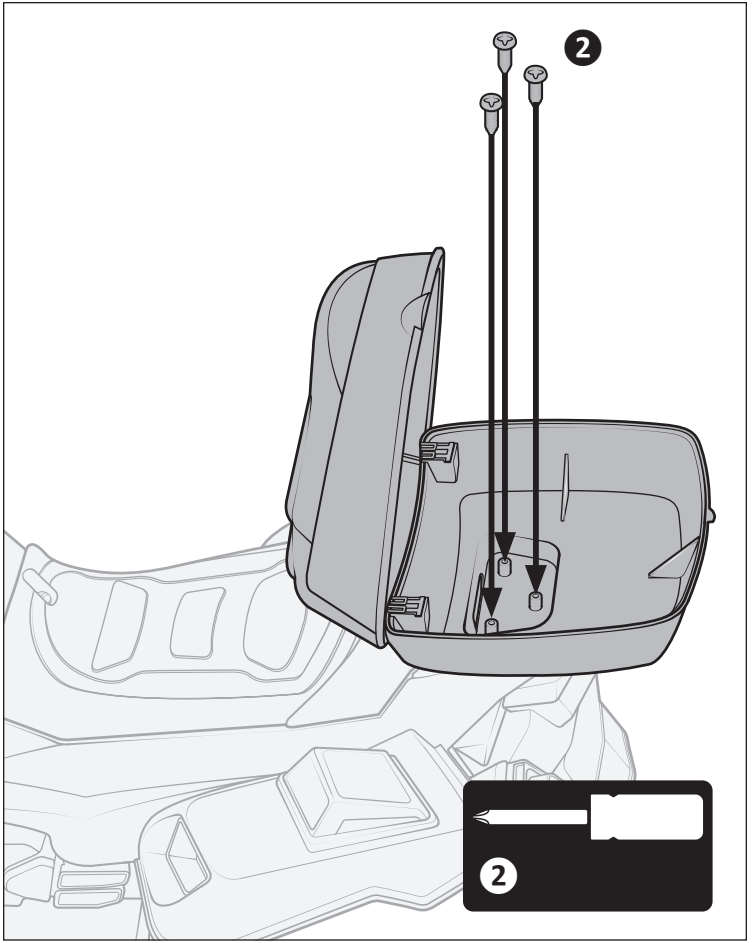
2
2

❹ Charging

⚠ WARNING!

- A battery contains hazardous material that may cause serious injury or death if handled, connected, or charged improperly. Only an adult who has read and understands the warnings and instructions in this manual should handle, connect, or charge the battery. Always contact Pacific Cycle at 1-877-741-6154 if you have any questions or concerns regarding handling, connecting, or charging the battery.
- Charging the battery more than 12 hours could cause the battery to explode or ignite resulting in serious injury, death or property damage. Do not charge the battery more than 12 hours. Always disconnect the product from the charger after the battery is completely charged. Immediately disconnect the charger from the wall after the charger indicator light turns green.
- A damaged supply cord, connector, or charger could cause burns to the skin, an electrical fire or serious injury, death, and property damage. Always inspect the supply cord, connector, and charger for damage (e.g., frayed or kinked wires, exposed inner wires, missing insulation) before use. If damaged, do not use the supply cord, connector, or charger for any purpose and properly dispose.
- Connecting the battery and battery charger to an extension cord(s) could result in overheating, explosion, fire, serious injury, death, or property damage. Never charge the battery using an extension cord. Always plug the charger directly into a wall outlet.

Notice

- The battery may become damaged if allowed to drain completely. Always keep the battery charged.
- The average time to charge the battery is between 10 and 12 hours. Failure to follow the instructions regarding charging the battery may result in permanent damage to the battery and void the warranty.

See also Page 3

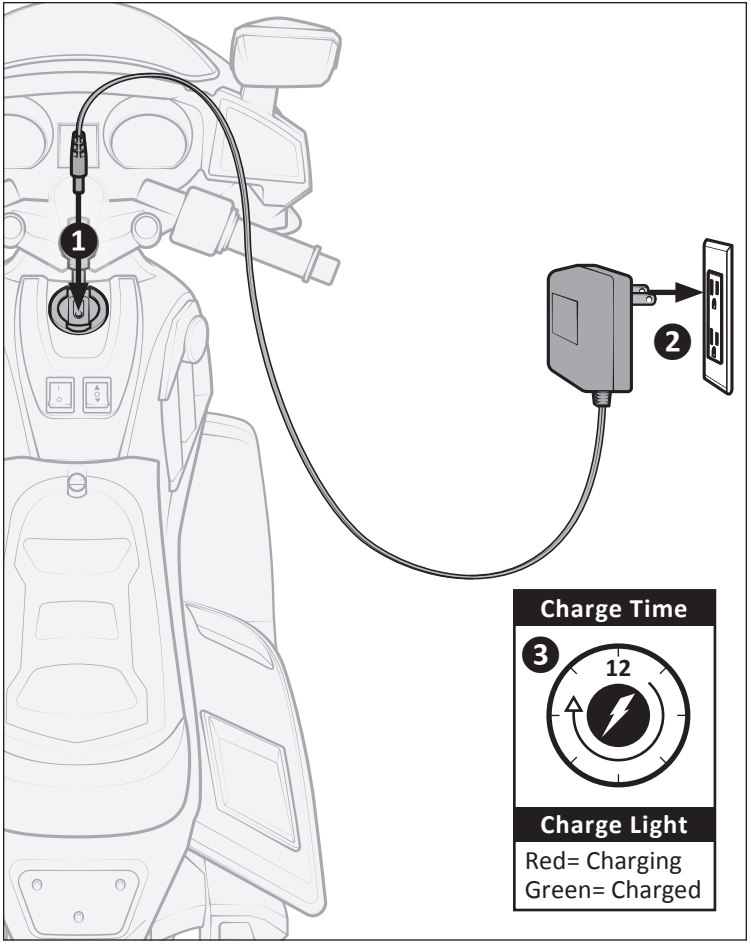
1
2
Charge Time
3
12
Charge Light
Red= Charging
Green= Charged

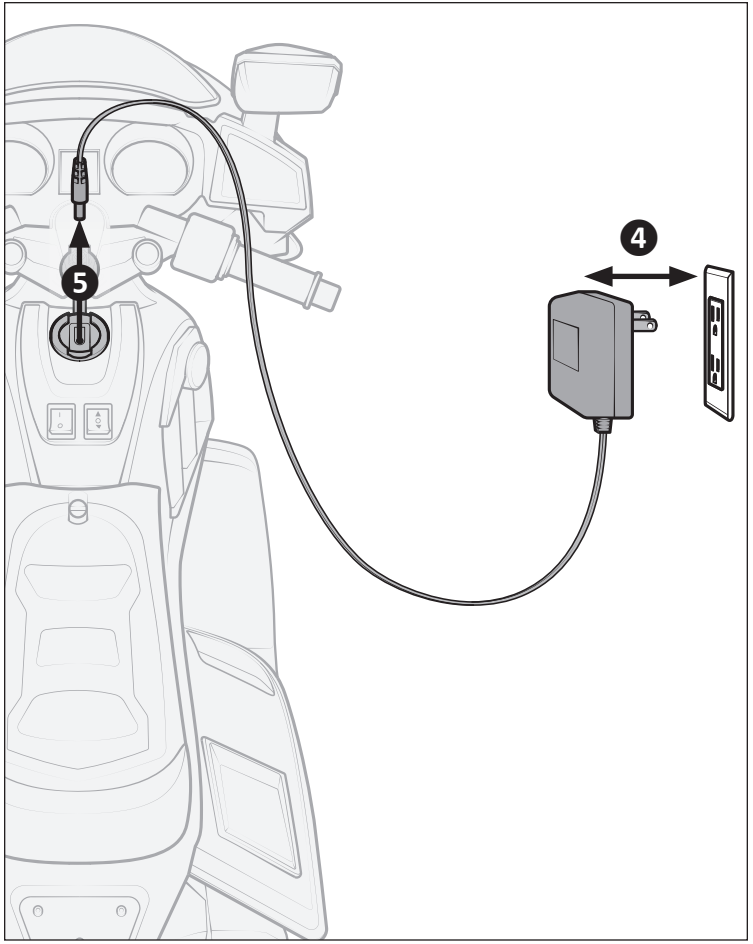
4
5

⑤ Use

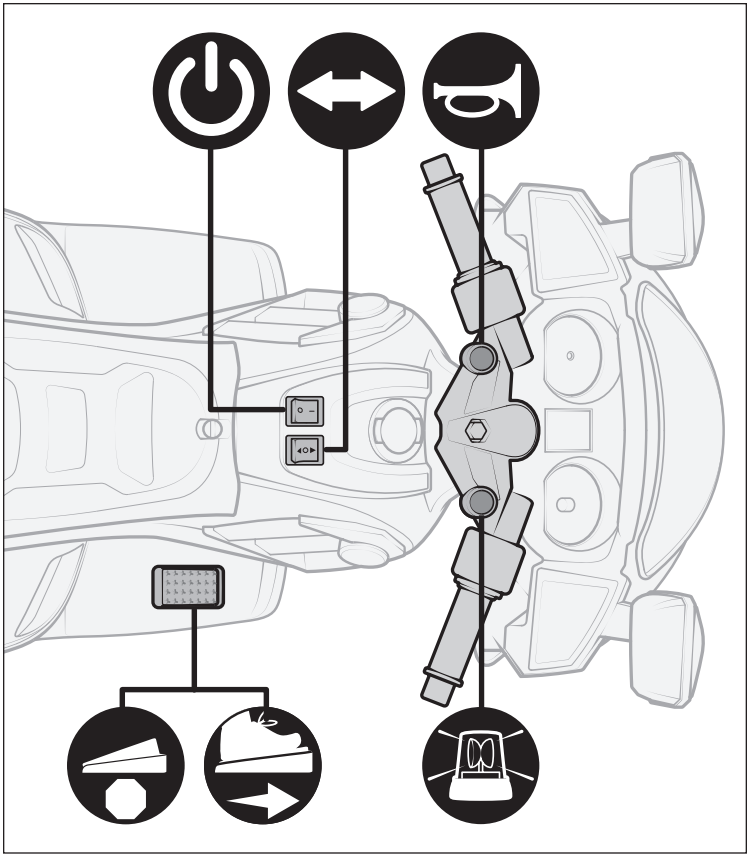

This is the ON/OFF switch. Turn the vehicle ON to activate the vehicle. Turn the vehicle OFF to deactivate the vehicle. Always leave switch in the OFF position when the vehicle is not being ridden.

This is the direction switch. Press it to change the direction of travel.

This is the horn button. Press this button to make a horn sound.

This is the foot switch. Press the foot switch down to move the vehicle. Release the foot switch by lifting the foot up to stop the trike. The electric motor will cause the trike to stop.

This is the siren button. Press the button down to activate the siren lights.

❻ Maintenance

The vehicle should be checked for damage, missing or badly worn parts before use.

- Check the tightness of the fasteners before each use.
- Check the tightness of the wheels.
- Ensure the battery is securely in place before use
- Occasionally use lightweight oil to lubricate moving parts such as wheels and steering linkage. Do not use oil on plastic or nylon parts. No lubrication is required.
- Store the vehicle indoors or cover it with a tarp to protect it from the wet weather. Keep it away from sources of heat, such as stoves and heaters.
- Clean the vehicle with a soft, dry cloth. To restore shine to plastic parts, use a non-wax furniture polish. Do not use car wax, abrasive cleaners or wash the vehicle with soap and water. Water will damage the motor, electrical system and battery.
- Pacific-Cycle recommends that you take the vehicle to an authorized service center for periodic maintenance and service. Call Pacific-Cycle Consumer Relations at 877-741-6154 for an authorized service center.
- For a complete list of replacement parts, please contact Pacific-Cycle Consumer Relations. To order parts, please have the model and serial number available, which can be found underneath the seat on the battery cover.

BATTERY REPLACEMENT AND DISPOSAL

The battery will eventually lose the ability to hold a charge. Depending on the amount of use, and varying conditions, the battery should operate for one to three years. Follow these steps to replace and dispose the battery.

Important! Recycle the dead battery responsibly. The battery contains lead acid (electrolyte) and must be disposed of properly and legally. It is illegal in most areas to incinerate lead acid batteries or dispose of them in landfills. Take it to a federal or state-approved lead acid battery recycler, such as an authorized service center or your local automotive battery retailer. Do not throw the battery away with your regular household trash!

BATTERY REPLACEMENT

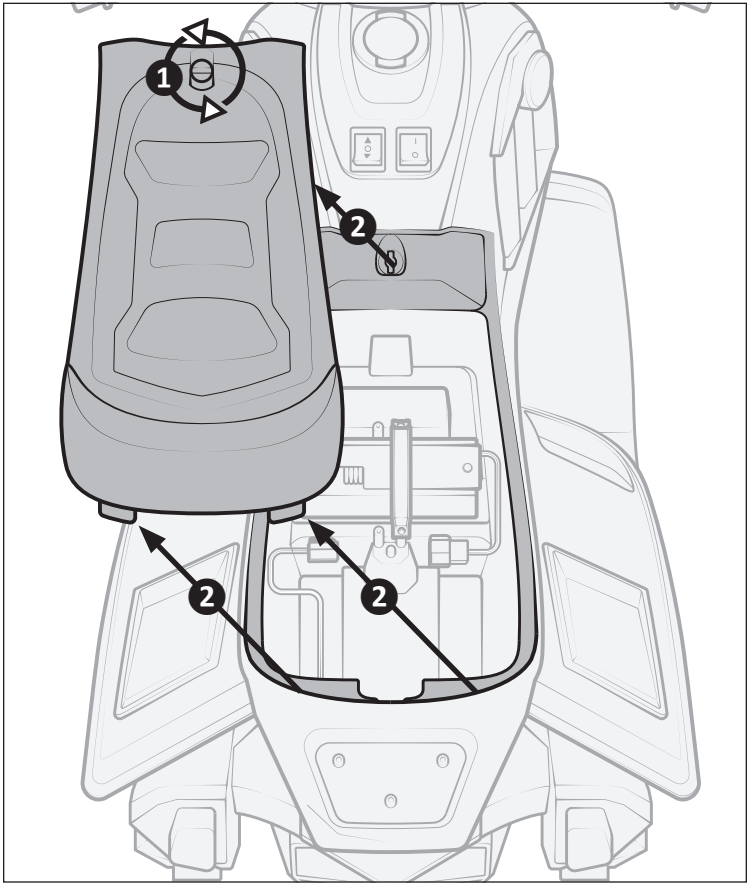

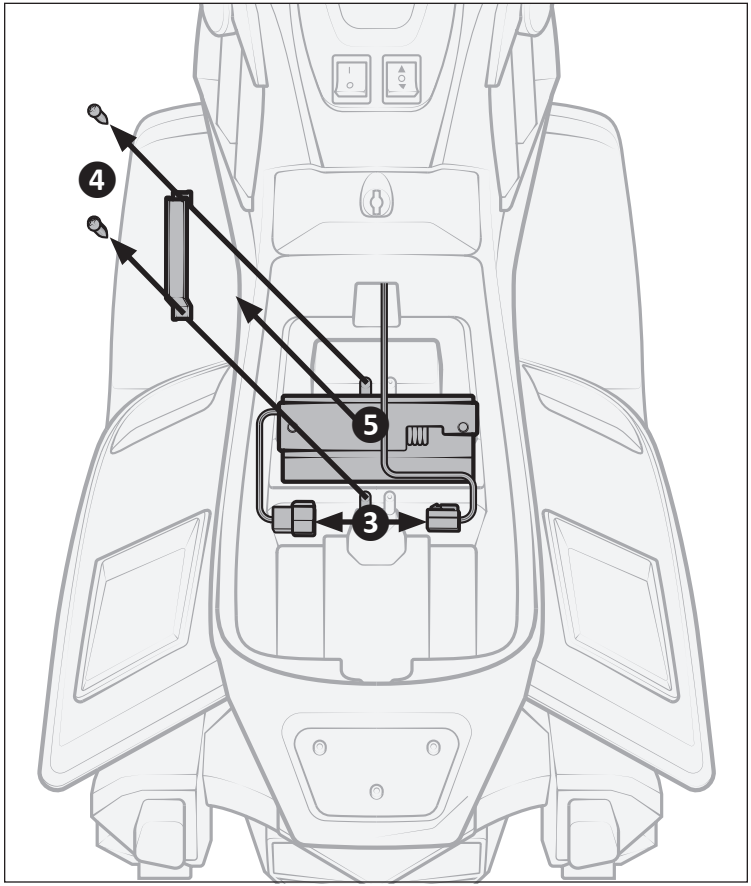

7 Service

Do not return this product to the place of purchase. If your vehicle needs service, repairs or replacement parts, call:
Pacific-Cycle Consumer Relations
Hours: 8:00 am – 5:00 pm (CST) Monday - Friday
Phone: 877-741-6154
Email: customerservice@pacific-cycle.com

For a complete list of replacement parts, please contact Pacific-Cycle Consumer Relations. To order parts, please have the model and serial number available, which can be found underneath the seat on the battery cover.

8 Troubleshooting

The following are examples of potential problems. Completely read through this manual and the troubleshooting guide table before calling Kid Trax Toys Consumer Relations. If you still need help resolving the problem please call **877-741-6154**. Kid Trax Toys recommends that you take the vehicle to an authorized service center for periodic maintenance and service. Call the number listed above for the closest center to you.

Problem	Possible Cause	Remedy
Vehicle does not run	Battery low on power	Recharge battery (see Battery: Recharge Interval and Time)
	Thermal fuse has tripped	Let the vehicle rest for 5 to 10 minutes before continuing normal operation. (see Maintenance)
	Battery connector or wires are loose	Check that the battery connectors are firmly plugged into each other. If wires are loose around the motor call Consumer Relations at **877-741-6154** for an authorized service center
	Battery is dead	Replace battery (see Battery: Replacement and Disposal)
	Electrical system is damaged	Call Consumer Relations at **877-741-6154** for an authorized service center
	Motor is damaged	Call Consumer Relations at **877-741-6154** for an authorized service center
Vehicle does not run very long	Battery is under charged	Check that the battery connectors are firmly plugged into each other when recharging (see Battery: Recharge Interval and Time)
Loud grinding or clicking noises coming from motor or gear box	Motor or gears are damaged	Call customer Relations at 877-741-6154 for an authorized service center.

Problem	Possible Cause	Remedy
Vehicle runs sluggishly or beeping occurs	Battery low on power	Recharge battery (see Battery: Recharge Interval and Time)
	Battery is old	Replace battery (see Battery: Replacement and Disposal
	Vehicle is overloaded	Reduce weight on vehicle (see User Requirements and Safety Warnings)
	Vehicle is being used in harsh conditions	Operate the vehicle level ground and firm surfaces (see User Requirements and Safety Warnings)
Vehicle needs a push to go forward	Poor contact of wires or connectors	Check that battery connectors are firmly plugged into each other. If wires are loose around the motor call Consumer Relations at **877-741-6154.**
	"Dead Spot" on motor	A ***dead spot*** means the electric power is not being delivered to the terminal connection and the vehicle needs repair. Call Consumer Relations at **877-741-6154**.
6V Battery will not recharge	Battery connector or adapter connector is loose	Check that battery connectors are firmly plugged into each other
	Charger is not working (lights not glowing)	Check that battery charger is plugged into a working wall outlet
	Charger not plugged in	Check that battery charger is plugged into a working wall outlet
Battery bubbles or gurgles when charging	This is normal and not a cause for concern	
Charger feels warm when recharging	This is normal and not a cause for concern	

❾ Warranty

One-Year Limited Warranty
Six-Month Limited Warranty on Battery

Pacific Cycle, Inc. (PC) warrants this product to the original retail purchaser as follows: The vehicle (except for the 6-volt battery) is warranted against defective materials or workmanship for one year from the date of original purchase. The 6-volt battery is warranted against defective materials or workmanship for six months from the date of original purchase. An original receipt is required to validate your warranty. PC will, at its option, provide replacement parts or replace this product. PC reserves the right to substitute if the part or model has been discontinued. To make a claim under this warranty you may contact us at www.kidtraxtoys.com; fax us at 1-800-858-2800, 24 hours a day; write to KidTrax Consumer Relations Department, KidTrax Toys, P.O. Box 344 Olney, IL 62450 or call 1-877-741-6154 from 8 a.m. to 5 p.m., Monday through Friday, CST. Proof of purchase is required, and shipping charges are the responsibility of the consumer.

Warranty Limitations
This warranty does not include damages which arise from accident, misuse, abuse, neglect or other causes not arising out of defects in materials or workmanship, nor does it cover damages arising out of service by other than an authorized PC service center. For personal use only. Not for commercial use. The original owner shall pay all labor charges connected with the repair or replacement of all parts. Under no circumstances does this limited warranty include the cost of shipment or transportation to or from an authorized Kid Trax repair center or Kid Trax retailer.

Limitation of Damages:
The warranty and remedies as set forth are exclusive and in lieu of all others, oral or written, expressed or implied. In no event will PC or the dealer selling this product be liable to you for any damages, including incidental or consequential damages, arising out of the use or inability to use this product. Some states do not allow limitations as the exclusion or limitation of incidental or consequential damages, so the above limitation may not apply to you.

Limitation of Warranties and Warranty Terms
Any implied warranties, including implied warranties of the merchantability and fitness for a particular purpose, shall be limited to the duration and terms of the express written warranty. Some states do not allow limitations as the exclusion or limitation of incidental or consequential damages, so the above limitation may not apply to you. This warranty gives you specific legal rights, and you may have other rights, which vary from state to state. Neither PC nor the dealer selling this product authorized any person to create for it any other warranty, obligation or liability in connection with this product.

A DIVISION OF DOREL INDUSTRIES

PACIFICCYCLE

© 2016 Pacific-Cycle Inc.
4902 Hammersly Rd.
Madison, WI 53711

Distributed by/Distribué par :
Dorel Industries, Inc.
dba Pacific Cycle Canada
1255 Greene Avenue
Montreal, Quebec Canada
H3Z 2A4
1-877-741-6154

Styles and colors may vary.
Made in China