[USA]

PLEASE - BEFORE RETURNING TO STORE:
Contact Huffy Customer Service.
We are glad to assist you
with any parts or assembly problems you might have!

For Fast Customer Service and email:
www.huffybikes.com/contact
OR TEL: 1 800 872 2453 (**US**)

To Order Parts:
www.huffybikes.com/parts

[CANADA]

PLEASE - BEFORE RETURNING TO STORE:
Contact Huffy Customer Service.
We are glad to assist you with any parts or assembly problems you might have!
AVANT DE RETOURNER AU MAGASIN :
Communiquez avec le service à la clientèle de Huffy. Nous vous aiderons volontiers avec tout problème concernant les pièces ou le montage!

For fast customer service in Canada / Pour un service à la clientèle rapide au Canada :
Call / Appelez : 1-800-872-2453
Or Email / Ou Courriel : huffycanada@huffy.com
Or visit / Ou visitez : : www.huffybikes.com/global-contacts

[MÉXICO]

ANTES DE DEVOLVER EL PRODUCTO A LA TIENDA:
Comuníquese Con Servicio Al Cliente De Huffy. Nos Complace Ayudarlo Con Cualquier Parte O Problema De Ensamblado Que Pudiera Tener.

Para obtener Servicio al cliente rápido, visite:
www.huffybikes.com.mx
Contáctanos por WhatsApp al 222 422 4955
Visita nuestra página de Facebook HuffyMexico

O LLAME AL TEL:
800 1 HUFFY 1 (800 1 48339 1)
(**Mexico only**)
Para comunicarse por correo electrónico:
servicio.mexico@huffy.com

Ford Official Licensed Product

Ford Motor Company Trademarks and Trade Dress used under license.

For ASSEMBLY Help:
Aide à l'ASSEMBLAGE :
Ayuda de la ASAMBLEA:

Please REGISTER your Product:
Veuillez ENREGISTRER l'article :
Por favor, REGISTRE su producto:

www.huffybikes.com/home/globalcontacts/
for current contact information / pour les informations de contact actuelles / para obtener la información de contacto actual

H-ERO-Ranger EN 09-01-21 **m0759**

EN

HUFFY

© Copyright Huffy Corporation 2021

Date Code Label Here

Owner's Manual
for
Battery Ride On

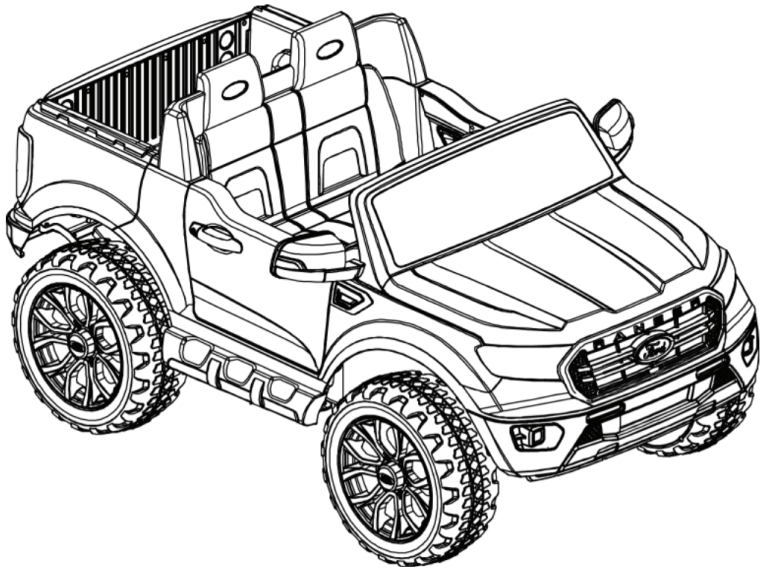

This manual contains important safety, assembly, operation and maintenance information.
Please read and fully understand this manual before operation.
Save this manual for future reference.

Always wear approved helmet and safety equipment when using this product.

See back page for Customer Service Information

Owner's Manual Index

Safety and Warnings 2-6

Assembly and Parts 7-15

Operation and Charging Battery 16-17

Maintenance Repair and Service 18-19
- General Info, Battery Storage, Replacement and Disposal

Troubleshooting 20-21

Warranty 23

Back Cover:
- Return and Service Contact information
- Registration QR Code Link
- Assembly QR Code Link

⚠ WARNINGS:

- The user must be **3 – 12 years**
- Max allowed weight **125 lb (57 kg)**
- Front and rear compartment max weight **5 lb (2.3 kg)**
- Never allow more than 2 riders

This product meets ASTM F963 and CPSIA requirements for electric vehicles.

IMPORTANT! Before using the unit for the first time the battery needs to be charged for at least **8** to **12** hours - no more than **20** hours. Only an adult who has read and understands the safety warnings should handle, charge or recharge of the battery (see **Operation** section).

Limited Warranty - US

General:
Part or model specifications are subject to change without notice.

This Limited Warranty is the only warranty for the product. ALL WARRANTIES OTHER THAN STATED HEREIN ARE DISCLAIMED INCLUDING IMPLIED WARRANTIES OF MERCHANTABILITY AND FITNESS FOR A PARTICULAR PURPOSE, TO THE EXTENT ALLOWABLE BY APPLICABLE LAW. ALL LIABILITY FOR INCIDENTAL, PUNITIVE, SPECIAL, OR CONSEQUENTIAL DAMAGES ARE EXPRESSLY DISCLAIMED, TO THE EXTENT ALLOWABLE BY APPLICABLE LAW.

The only uses for this product are described in this manual.

Warranty registration is not required.

The Limited Warranty extends only to the original consumer and is not transferable to anyone else.

What does this Limited Warranty cover?
This Limited Warranty covers defects in workmanship and materials for all parts of the product except those indicated below as not warranted.

What must you do to keep the Limited Warranty in effect?
This Limited Warranty is effective only if:
- Product is completely and correctly assembled.
- Product is used under normal conditions for its intended purpose (see the following section for excluded activities).
- Product receives all necessary maintenance and adjustments.
- Product is used for general transportation and recreational use only.

What is not covered by this Limited Warranty?
This product is designed for recreational use only. This Limited Warranty does not cover normal wear and tear, normal maintenance items, or any damage, failure, or loss that is caused by improper assembly, maintenance, adjustment, storage, or use of the product. This Limited Warranty does not extend to future performance.

This Limited Warranty will be void if the product is ever:
- Used in any competitive sport
- Used for stunt riding, jumping, aerobatics or similar activity
- Modified in any way
- Modified with the addition of a motor
- Ridden by more than one person at a time
- Rented, sold, or given away
- Used in a manner contrary to the instructions and warnings in this Owner's Manual

What will The Manufacturer do?
Manufacturer's sole and exclusive obligation under this Limited Warranty is to repair and/or replace, at its sole option, any covered defect in workmanship or materials.

How do you get service?
Contact the Customer Service Department.
- See included list for Customer Contact information.

What rights do you have?
This Limited Warranty gives you specific legal rights. You may also have other rights which vary from State to State.

For how long does this Limited Warranty last?
- When used in this Limited Warranty, the phrase "for life" means for as long as the original consumer owns the product.
- Drive Battery - 90 days
- Electronics - 90 days
- All other Components - 6 months

WARNING - TO AVOID SERIOUS INJURY:

Here are basic, common sense safe riding practices you should read aloud to your child and anyone who may use the vehicle.

It is the responsibility of the adult to educate the child, determine if they are fit to operate the vehicle, and supervise use.

To avoid serious injury or death follow these safety rules and guidelines:

- **Adult assembly required.** Choking hazard to children under the age of 3 years - contains small parts. Keep small children away when assembling. Keep poly bags away from child.
- After complete assembly, remove and dispose of all protective material and poly bags. Be sure to remove all packaging materials and parts from underneath the vehicle body.
- To reduce the risk of injury, **continuous adult supervision is required** while using the vehicle.
- It is the responsibility of the adult to educate the child and determine if they are capable of operating the vehicle safely.
- Ensure child uses common sense and safe practices when using the vehicle.
- Before using the vehicle the child must understand the controls and safety issues. They must also demonstrate the capability and skill to handle the vehicle and operate its controls to avoid falls or collisions.
- **Protective Equipment must be worn:** Always wear safety equipment such as a helmet that meets CPSC (or equivalent standard for your country) with chinstrap securely fastened, knee pads, elbow pads, wrist guards, gloves and shoes.
- If equipped, child should always use properly and securely attached Seat Belt.
- **SEATED MODELS:** Always sit in the seat when using the vehicle. Do not stand on side boards. Do not stand on or in vehicle while moving.
- **FOOT/FENDER BRAKE MODELS:** Fender can become hot after use. Do Not touch with hand.
- **MODELS WITH NO BRAKES:** Motor friction will gradually stop the unit.
- Self-locking nuts and other self-locking fixings may lose their effectiveness when reused.
- Body parts such as hands, legs, hair and clothing can get caught in moving parts. Never place a body part near a moving part or wear loose clothing while using the vehicle.
- **Do not use the vehicle in an unsafe manner or at an unsafe speed. Examples include but are not limited to:**
  - Always use vehicle in a safe, secure environment on flat, smooth paved surfaces only.
  - Never use in roadways, near motor vehicles, on or near steep inclines or steps, swimming pools or other bodies of water.
  - Do not pull or push the vehicle with another vehicle or similar device.
  - Do not tow anything behind the vehicle.
  - Do not drive into fixed objects, which may cause the wheels to spin, causing the motor to overheat.
  - Never use near streets, water, swimming pools, hills, steps, drop-offs, sloped surfaces or driveways, wet areas, flammable vapors, in alleys, at night or in the dark.
  - Do not use the vehicle in unsafe conditions such as snow, rain, loose dirt, mud sand or fine gravel. This may result in unexpected action such as tip over and skidding. Using the

WARNING - TO AVOID SERIOUS INJURY:

vehicle in loose dirt, mud, sand, or fine gravel may damage the electronics and gear box inside the vehicle.
- Do not overload the vehicle. Do not drive in very hot weather, components may overheat. Do not allow water or other liquids to come in contact with the battery or other electric components.
- Obey all local traffic and scooter riding laws and regulations.

- Do not tamper with the electrical system. Doing so may create a short, causing the fuse to trip or other damage including fire.
- **RISK OF FIRE.** Do not bypass fuse. Replace only with original size and type.
- There are additional hazards of using the vehicle in areas other than private grounds.
- Only use authorised replacement parts.
- Before each ride, check that the steering system is correctly adjusted and that all connection components are firmly secured and not broken
- Refer to the Assembly Manual for the correct techniques for use and for braking
- While using the product, keep hands and fingers away from wheels and other moving parts to avoid danger of pinching or entrapment.
- If wheels or bearings are worn and do not spin freely, replace with original equipment.
- Non-rechargeable batteries are not to be recharged
- Batteries are to be inserted with the correct polarity
- The supply terminals are not to be short-circuited
- Rechargeable battery is only to be charged by adults
- The battery chargers used with the toy are to be regularly examined for damage to the cord, plug, enclosure and other parts, and in the event of such damage, they must not be used until the damage has been repaired.

ALWAYS WEAR YOUR HELMET WHEN RIDING THIS PRODUCT!

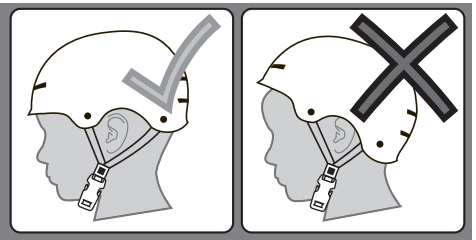

Always read the user manual that comes with your helmet to make sure it is fitted and attached properly to the wearer's head according to the fitting instructions described in the user manual.

Troubleshooting Guide - continued

BEFORE YOU CALL SUPPORT:

1. What is the model and date code?
2. When was the product purchased?
3. Has the product ever worked for a time or has never worked at all since purchase?
   - Yes, When did the product last operate correctly?
   - No, were the battery wires connected?
4. How long was the battery charged?
5. Is the charger plugged into the unit when you try to operate the product?
   - (The unit will not operate with charger plugged in)
6. Do any lights or sounds come on when you power the product on?
   - Yes, Does the lights and sounds go away when you press the drive switch?
7. When you press the drive switch, does an electric motor start?
   - Yes, Did you check that the correct drive wheel was installed?
   - Yes, Does the insert in the gearbox rotate?

Troubleshooting Guide

The following are examples of potential problems. Completely read through this manual and the troubleshooting guide table before calling. If you still need help resolving the problem please contact Customer Service.

NOTE: Vehicle should be turned off and fully charged before doing troubleshooting.

Problem	Possible Cause	Solution
Vehicle does not run when switch is activated	Battery wires not connected or are loose	Connect battery wires according to assembly instructions, Check that the battery connectors are firmly plugged into each other. If wires are loose around the motor call Customer Service.
	Battery low on power	Recharge battery (see Battery: Recharge interval and time)
	Battery Charger still plugged in	Unplug Battery Charger from unit and wall
	Thermal fuse has tripped	Let Fuse reset
	Battery is dead	Replace battery (see Battery: Replacement and Disposal)
	Electrical system or motor is damaged	Call Customer Service.
Vehicle does not run very long or runs slug-gishly	Battery is undercharged.	Check that the battery connectors are firmly plugged into each other when recharging (see Battery: Recharge interval and Time)
	Battery is old and cannot be fully charged	Replace battery (see Battery: Replacement and Disposal)
	Vehicle is overloaded	Reduce weight on vehicle (see user require-ments and Safety Warnings)
	Vehicle is being used in harsh conditions	Avoid using vehicle in harsh conditions (see User Requirements and Safety Warnings)
Vehicle makes loud noise when in use	Chain is dry (on chain drive models)	Lubricate chain with light oil.
Loud grinding or clicking noises coming from motor or gear box	Motor or gears are damaged	Call Customer Service.
	Drive Wheel is partially engaged	Check drive wheel - to motor engagement.
Battery will not recharge	Battery connector or adapter connector is loose	Check that the battery connectors are firmly plugged into each other.
	Charger is not working	Check that the battery charger is plugged into a working wall outlet.
	Battery is dead	Replace battery.
Charger feels warm when recharging	This is normal and not a cause for concern	If excessively hot, unplug and replace.

⚠ BATTERY & CHARGER WARNINGS:

The following safety hazards may result in serious injury or death to the user of the vehicle:

- Battery Charger is NOT to be used by Children.
- Rechargeable battery is only to be charged by adults.
- Battery Charger for Indoor use only.
- Use of a battery or charger other than the supplied rechargeable battery and charger may cause a fire or explosion. Only use the supplied rechargeable battery (or lead-acid or lithium suitable replacement) and charger with the vehicle.
- Using the rechargeable battery and charger for any other product may result in over-heating, fire or explosion. Never use the rechargeable battery and charger with another product.
- Explosive gases are created during charging. Charge the battery in a well ventilated area. Do not charge the battery near heat or flammable materials.
- Contact between the positive and negative terminals may result in fire or explosion. Avoid direct contact between the terminals. Picking up the battery by the wires or charger can cause damage to the battery and may result in a fire. Always pick up the battery by its case or handles.
- Battery must be handled by adults only. Liquids on the battery may cause fire or electric shock. Always keep all liquids away from the battery and keep the battery dry.
  - Contact or exposure to battery leakage (lead acid) may cause serious injury. If contact or exposure occurs immediately call your physician. If the chemical is on the skin or in the eyes, flush with cool water for 15 minutes. If the chemical was swallowed, immediately give the person water or milk. Do not give water or milk if the patient is vomiting or has a decreased level of alertness. Do not induce vomiting.
- Battery Posts, terminals and related accessories contain lead and lead compounds (acid), chemicals known to cause cancer, reproductive harm and are toxic and corrosive. Never open the battery.
- Tampering or modifying the electric circuit system may case a shock, fire or explosion and permanently damage the system. Exposed wiring and circuitry in the charger may cause electric shock. Always keep the charger housing closed.
- Non-rechargeable batteries are not to be recharged
- Batteries are to be inserted with the correct polarity
- The supply terminals are not to be short-circuited
- The battery chargers used with the toy are to be regularly examined for damage to the cord, plug, enclosure and other parts, and in the event of such damage, they must not be used until the damage has been repaired.
- Do not mix old and new batteries.
- Do not mix alkaline, standard (Carbon-Zinc) or rechargeable batteries.
- Non-Drive rechargeable batteries are to be removed from the unit before being charged.

Radio Frequency Information (if applicable)

CAUTION: Changes or modifications to this unit not expressly approved by the party responsible for compliance could void the user's authority to operate the equipment.
This device complies with Part 15 of the FCC Rules. Operation is subject to the following two conditions: **(1)** this device may not cause harmful interference, **(2)** this device must accept any interference received, including interference that may cause undesired operation.
NOTE: This equipment has been tested and found to comply with the limits for a Class B digital device, pursuant to Part 15 of the FCC Rules. These limits are designed to provide reasonable protection against harmful interference in a residential installation. This equipment generates, uses and can radiate radio frequency energy and, if not installed and used in accordance with the instructions, may cause harmful interference to radio communications.
However, there is no guarantee that interference will not occur in a particular installation. If this equipment does cause harmful interference to radio or television reception, which can be determined by turning the equipment off and on, the user is encouraged to try to correct the interference by one or more of the following measures:

- Reorient or relocate the receiving antenna.
- Increase the separation between the equipment and receiver.
- Connect the equipment into an outlet on a circuit different from that to which the receiver is connected.
- Consult the dealer or an experienced radio/TV technician for help.

Drive Motor Battery

Only an adult who has read and understands the safety warnings should handle, charge or recharge the battery. Failure to comply with all safety warnings may result in serious injury or death.

Battery Fuse

The drive motor circuit features a thermal fuse that will automatically trip and cut all power to the vehicle if the motor, electric system or battery is overloaded. The fuse will reset and power will be restored after a short time. If the thermal fuse trips repeatedly during normal use, the vehicle may need repair.

WARNING: DO NOT BYPASS THE FUSE - RISK OF FIRE. This may overload and damage the electrical system.

Battery Re-charge Interval and Time

IMPORTANT!

Check the drive battery and charger (supply cord, connector) for wear and damage before charging. Do not charge the battery if damage has occurred. Only replace with the same type and voltage rechargeable battery and charger supplied by the manufacturer.

- Only use the rechargeable battery (or equivalent replacement) and charger supplied with your vehicle.
- Before first use, charge battery **8 to 12 hours - never longer than 20 hours**.
- Once battery is depleted, recharge for **8 to 12 hours - never longer than 20 hours**.
- Do not short circuit the battery: Do NOT connect red and black wires together or connect positive and negative terminals on the battery together.
- When battery is fully charged, un-plug charger from the wall outlet and disconnect from charger port.

The drive battery should be charged when depleted, or if not used regularly, once a month. Failure to charge the battery as directed will cause permanent damage to the battery and will void the warranty.

Drive Battery Replacement

FOLLOW THESE STEPS IF THE BATTERY NEEDS TO BE REPLACED:

NOTE: Batteries are installed, mounted and wired differently depending on model. Make a simple drawing on paper (or take pictures) how your battery is installed and how Red and Black wires are connected.
NOTE: Remove seat screws and seat (varies depending on model).

1. Remove any clamps and Battery Covers.
2. Disconnect wires.
3. Carefully lift out the Battery.
   - Depending on the condition of the battery (i.e.: leakage) you may want to wear protective rubber gloves before removal.
   - Do not lift the battery by its connectors or cables.
4. Place the dead batteries in a plastic bag.
5. Install replacement battery(s) in same position and orientation as originals.
6. Re-connect all wires **in original positions.**
7. Re-install Battery Covers and hold-down clamps and screws.

⚠ WARNING:
Ensure no wires are pinched or bound up.

8. Re-Install seat and screws.

Introduction to Assembly

This Owner's Manual may be made for several different style products.
- Some illustrations may vary slightly from the actual product.
- Follow instructions completely.
- If the product has any parts that are not described in this manual, look for separate "Special Instructions" that are supplied with the unit.
- All features, components and accessories are not included on all models.
- Use the Index page to locate specific sections of this manual.
- Please read through this entire manual before beginning assembly or maintenance.
- If you are not confident with assembling this unit, contact customer service.

⚠ WARNING: Keep small parts away from children during assembly.

NOTE: All of the directions (right, left, front, rear, etc.) in this manual are as seen by the rider while seated.

Do not dispose of the carton and packaging until you complete the assembly of the product. This can prevent accidentally discarding parts of the unit.

Parts Assembly

NOTE: Some Parts Shown are assembled on both sides of vehicle

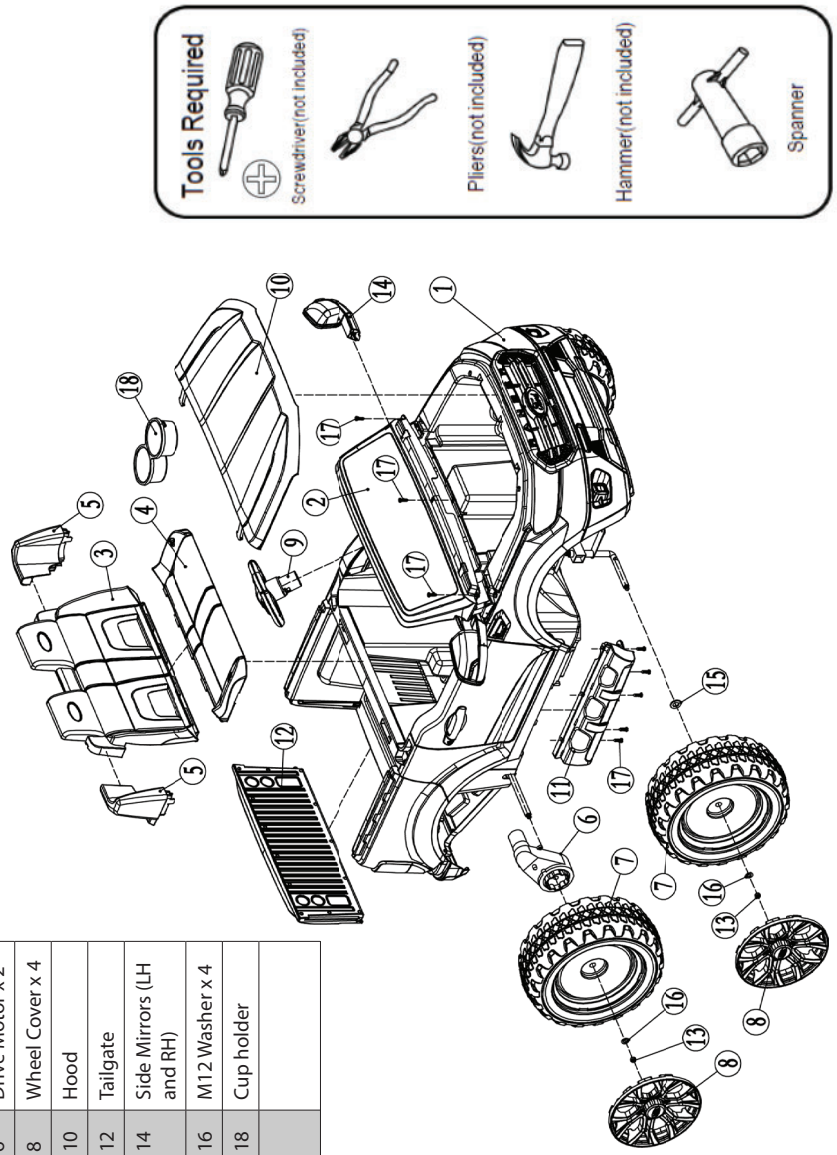

1	Vehicle Body	2	Windshield															
3	Seat Back	4	Seat Bottom															
5	Seat Pillars x 2	6	Drive Motor x 2															
7	Wheels x 4	8	Wheel Cover x 4															
9	Steering Wheel	10	Hood															
11	Support Frame	12	Tailgate															
13	M12 Nut x 4	14	Side Mirrors (LH and RH)															
15	M16 Washer x 2	16	M12 Washer x 4															
17	Screw x 13	18	Cup holder															
19	Charger (not shown)																	

Maintenance Repair and Service

GENERAL: The vehicle should be checked for damage, missing or badly worn parts before each use. If any part of the product does not operate properly – discontinue use.

- Check the tightness of the fasteners before each use. Replace any fasteners that are damaged.
- Inspect the product frequently. Failure to inspect the product and to make repairs or adjustments, as necessary, can result in injury to the rider or to others. Make sure all parts are correctly assembled and adjusted as written in this manual and any "Special Instructions".
- Immediately replace any damaged, missing, or badly worn parts.
- Make sure all fasteners are correctly tightened as written in this manual and any "Special Instructions". Parts that are not tight enough can be lost or operate poorly. Over tightened parts can be damaged. Make sure any replacement fasteners are the correct size and type.
- Check the tightness of the wheels:

NOTE: If the drive wheel is not tight, it will not engage the gears and the vehicle will not run.

- Ensure the battery bracket is securely in place before use.
- Store the vehicle indoors. Keep it away from sources of heat, such as stoves and heaters.
- Keep the product clean and free of dirt, dust and water. This will prolong the useful life of the product.
- Clean the vehicle with a soft, dry cloth. To restore shine to plastic parts, use a non-wax furniture polish. Do not use automotive wax, abrasive cleaners or wash the vehicle with soap and water.

NOTE: If the instructions in this manual or any "Special Instructions" are not sufficient for you, please contact customer service.

CAUTION: Self-locking nuts and other self-locking devices may lose their effectiveness when re-used.

Battery Storage and Disposal

The drive battery should be charged when depleted, or if not used regularly, once a month. Failure to charge the battery as directed will cause permanent damage to the battery and will void the warranty.

Follow these guidelines if the battery is removed:

- Do not store battery in extreme hot or cold temperatures.
- Wipe the battery clean with a dry cloth prior to storage. Wash cloth separate from other clothes.

BATTERY DISPOSAL:

- The sealed lead-acid battery must be recycled or disposed of in an environmentally sound manner.
- Do not dispose of battery in a fire. The battery may explode or leak acid.
- Do not dispose of the battery in household trash. The incineration, land filling or mixing of sealed lead-acid batteries with household trash is prohibited by law.
- Return an exhausted battery to a federal or state approved lead-acid battery recycler, such as a local seller of automotive batteries (check local battery disposal regulations).

Charging the Drive Battery:

IMPORTANT! Before using the unit for the first time the battery needs to be charged for at least **8** to **12** hours - no more than **20** hours. Once battery is depleted, recharge for **8** to **12** hours - no more than **20** hours.

IMPORTANT!

Check the drive battery and charger (supply cord, connector) for wear and damage before charging. Do not charge the battery if damage has occurred. Only replace with the same type and voltage rechargeable battery and charger supplied by the manufacturer.

- Only use the rechargeable battery (or equivalent replacement) and charger supplied with your vehicle.
- Always turn power off and charge battery after riding.
- The drive battery should be charged when depleted, or if not used regularly, once a month. Failure to charge the battery as directed will cause permanent damage to the battery and will void the warranty.

STEPS:

1. Locate Charging Port Ⓐ.
2. Plug Charger plug into unit Charging Port.
3. Plug Charger into Wall outlet Ⓑ.
4. When battery is fully charged, unplug charger from the wall outlet and disconnect from charger port.

NOTE: The charger may feel warm during the charging. If excessively hot, unplug and replace.

NOTE: This product has charging protection: When charging, all functions are turned OFF.

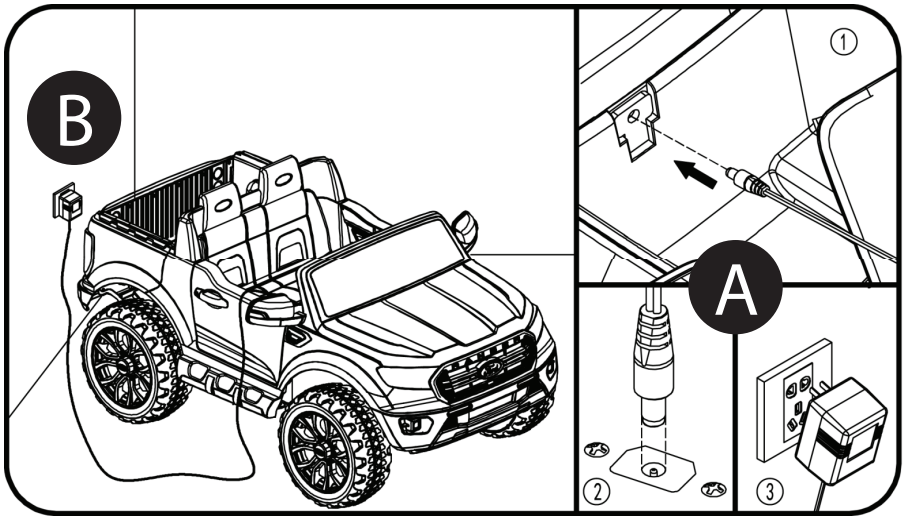

1. Install Rear Wheels:

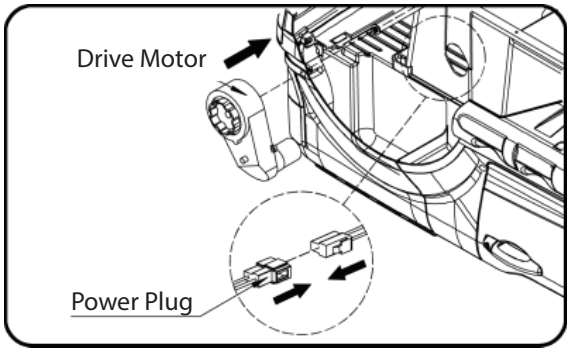

- With Car upside down, remove Locknut on Rear Axle.
- Install Drive Motor onto Rear Axle as shown.
- Firmly connect Power Plug and insert wires into body hole.

NOTE: There is a LEFT and RIGHT motor.

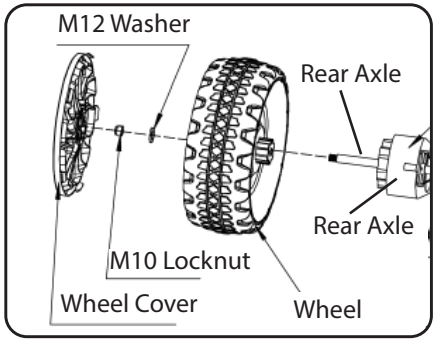

INSTALL WHEELS:

- Install Wheels so that Wheel Gear fits inside Drive Motor Gear.
- Install Washer and Locknut.
- Tighten Locknut fully and securely.
- Make sure Wheel spins freely.
- Line up tabs on Wheel Cover and snap evenly into place.
- Repeat for opposite side.

2. Install Front Wheels:

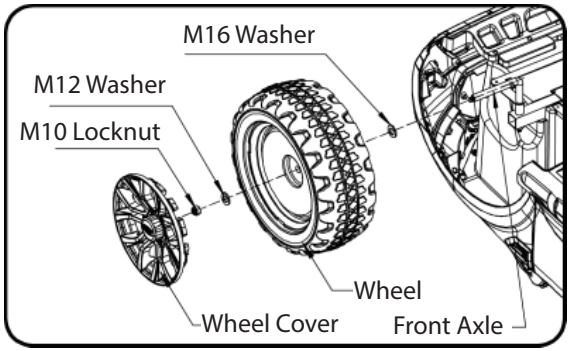

- With Car upside down, remove Locknut on Front Axle.
- With one Washer in place, install Wheel onto Axle as shown.
- Install remaining Washer and Locknut onto Axle.
- Tighten Locknut fully and securely.
- Make sure Wheel spins freely.
- Line up tabs on Wheel Cover and snap evenly into place.
- Repeat for opposite side.

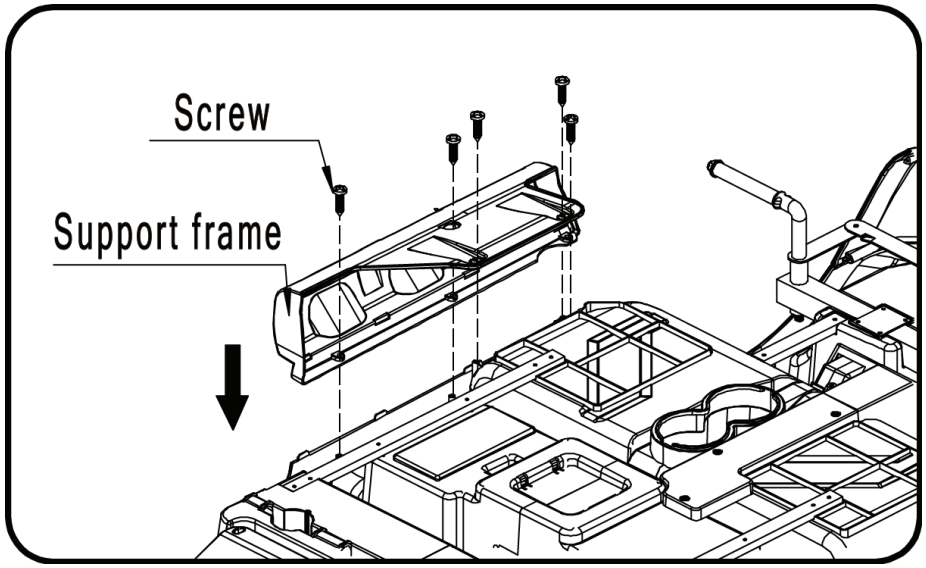

INSTALL SUPPORT FRAME:

NOTE: There is a LEFT and RIGHT support frame.

- Position support frame so that mounting holes line up.
- Install screws fully and securely. Do not over-tighten.
- Repeat for opposite side.

10. Install Side Mirrors:

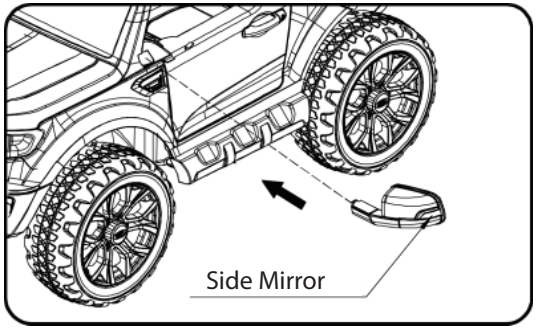

- Position Side Mirrors as shown and snap into position.
- **Note** there are Left and Right Mirrors.
- Gently pull on Mirrors to make sure they are not loose.

Operation:

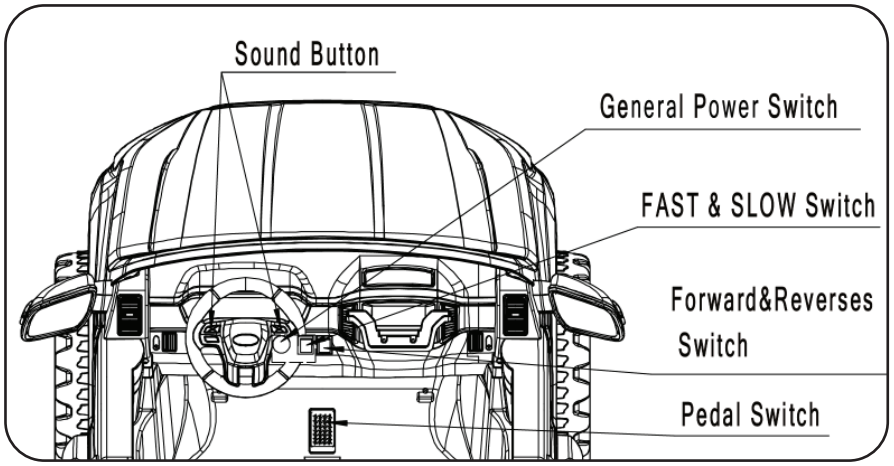

1. Turn on Power Switch . Various sounds also play.
2. Select Speed (Fast or Slow).
3. To move **FORWARD**, put Direction Switch to FORWARD position.
   - Press Foot Switch - Vehicle moves forward.
   - To **STOP**, remove foot from Foot Switch - Vehicle gradually stops with motor friction.
4. To move in **REVERSE**, put Direction Switch to REVERSE position.
   - Press Foot Switch - Vehicle moves in reverse.
   - To **STOP,** remove foot from Foot Switch - Vehicle gradually stops with motor friction.

NOTE: Push sound buttons for various sounds.

8. Install the Windshield:

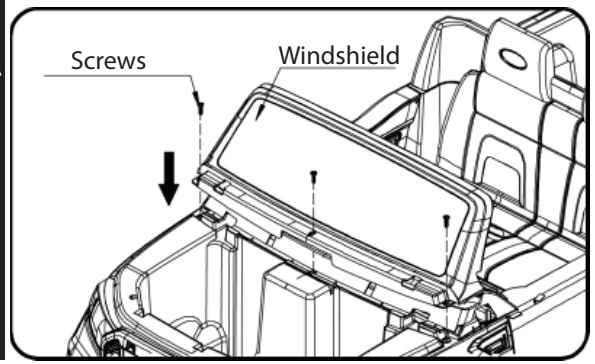

- Position Windshield so that mounting holes line up with holes in Body.
- Install 3 Screws evenly and securely - do no over-tighten.
- Gently pull up on Windshield to make sure it is not loose.

9. Install Front Hood:

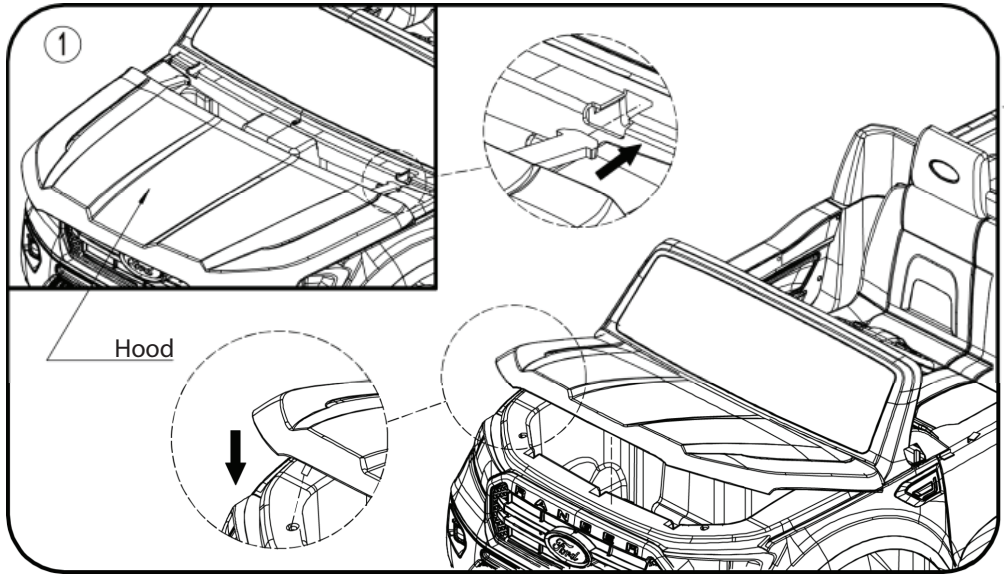

- Position Hood so that Rear Tabs fit inside body as shown - Push back into place.
- Close Hood.

NOTE: Storage under Hood. Max Weight: 5 lbs)

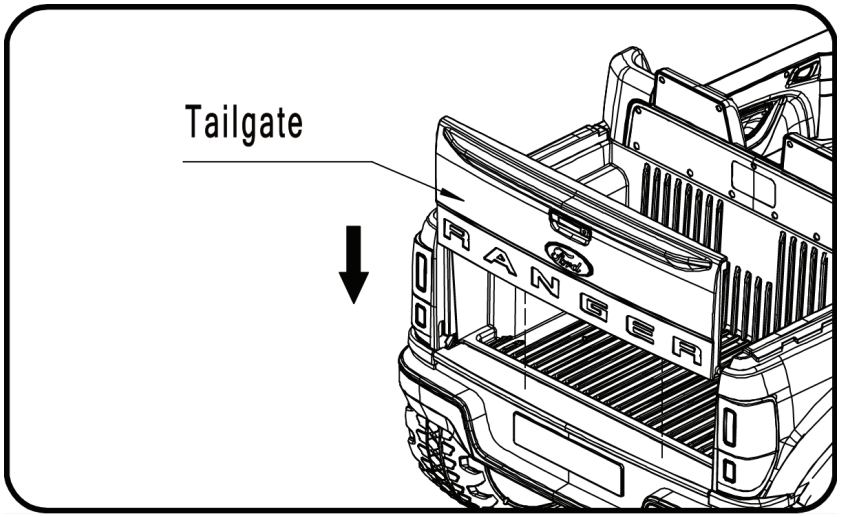

INSTALL TAILGATE:

- Position tailgate so sides line up with body slots and slide full down into position.

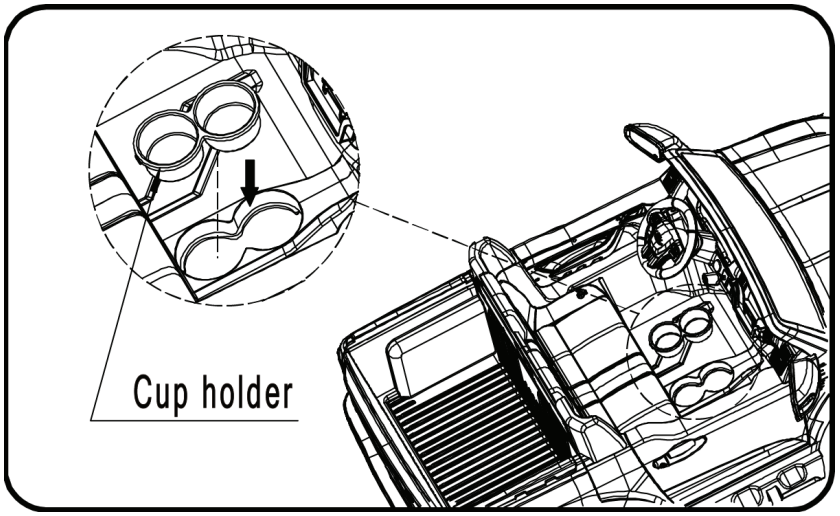

INSTALL CUPHOLDER:

- Position cupholder as shown and snap fully into position.

3. Installing Steering Wheel:

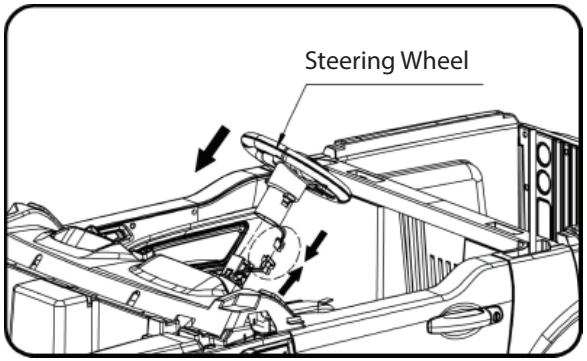

- Position Steering Wheel as shown.
- Firmly connect Connectors -Put extra wire inside the Steering Wheel.
- Press Steering Wheel onto shaft until it SNAPS into position.
- Pull up gently to make sure it does not come lose.

4. Connect the Power Supply:

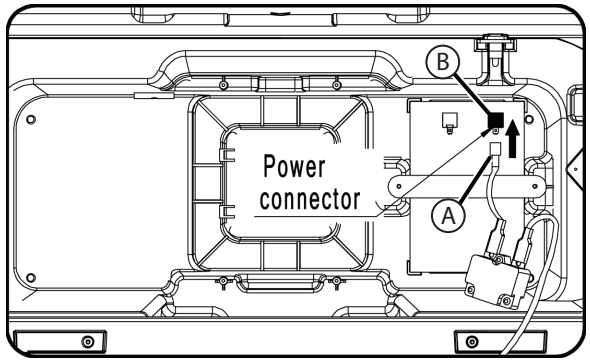

WITH SEAT REMOVED:

- Firmly battery connect connectors **A** and **B**.

5. Install Seat Back:

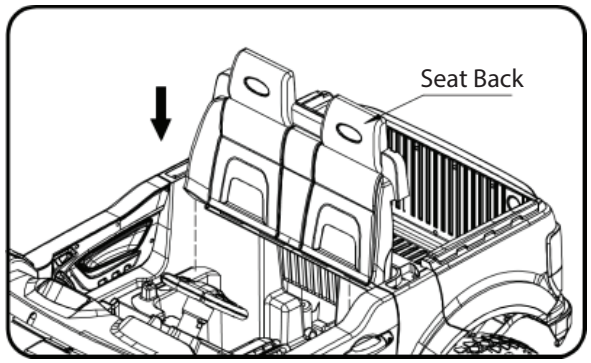

- Position Seat Back as shown and slide down into position.
- Continue to next step >>

6. Install the Seat Pillars:

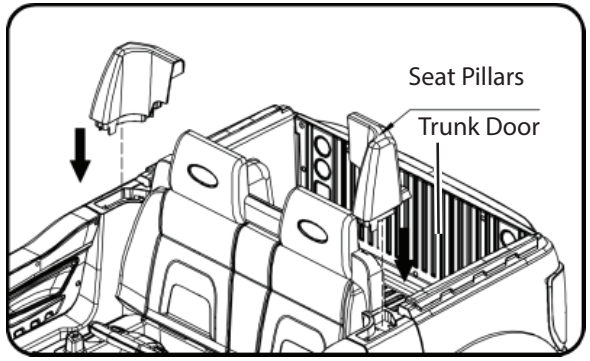

- Position Left and Right Seat Pillar as shown and SNAP into position.
- Pull up gently to make sure they are not lose.

NOTE: Rear Truck Door opens by lifting UP and pulling back. Close by lifting Door up while closing and then pushing down. Test by pulling back gently to make sure it is does not come open.

7. Install the Seat Bottom and Lock Seat:

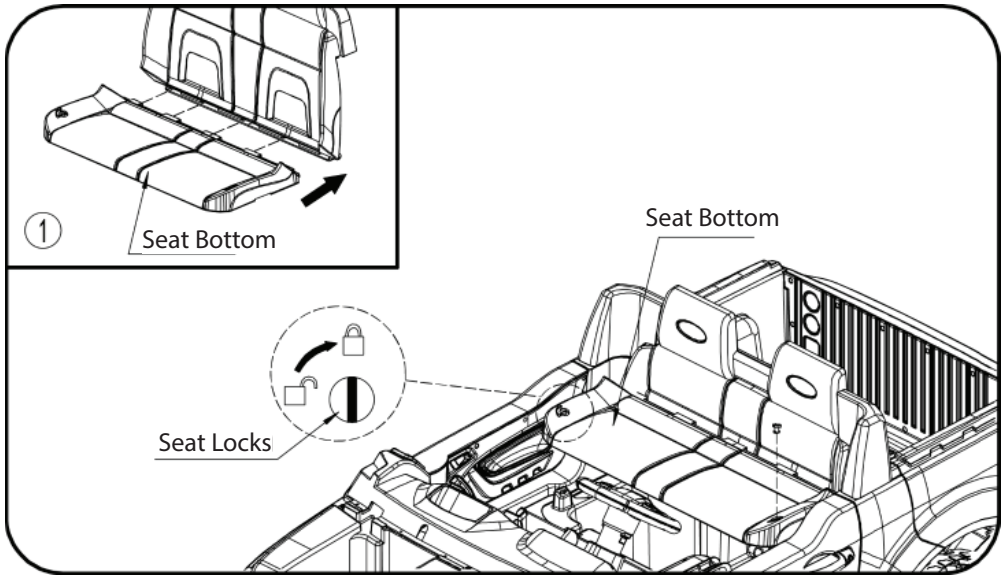

- Position Seat Bottom as shown and fit into place so that Locking Holes line up.
- Turn both Seat Locks to 'Locked' position as shown.
- Do NOT over-tighten - Seat Locks can break.