Goalsetter®
Best in Basketball™

INSTALLATION AND OWNER'S INSTRUCTIONS

Wall Mount Series

Adjustable and Fixed Height Goal Systems

- GS72
- GS60
- GS54

TABLE OF CONTENTS

Safety Instructions 2
Goal Specifications 3
Frame Attachment 4
Frame Assembly *(adjustable height)* 5
Frame Assembly *(fixed height)* 6
Backboard Attachment 7
Rim Attachment 8
Raise and Adjust Backboard 9
Height Indicator Attachment 10
Ready to Play 11
Warranties ..... back cover

800.362.4625
www.goalsetter.com

PROUDLY MADE IN THE USA

Safety Instructions

Owner must ensure that all installers and players know and comply with these rules for safe assembly, installation, operation and use of the system. Proper and complete assembly, use and supervision is essential for proper operation of the product and to reduce the risk of accident or injury. **DO NOT ATTEMPT TO ASSEMBLE AND INSTALL THIS PRODUCT WITHOUT FOLLOWING THE INSTRUCTIONS CAREFULLY.**

⚠ WARNING

1. Failure to follow these instructions may result in death, serious injury and/or property damage and will void the warranty. Do not install or use this product unless the instructions within this manual have been carefully read and understood.
2. Locate your goal away from potential dangers, including trip hazards, high-traffic areas or where a vehicle might come into contact with backboard or rim.
3. To avoid severe injury or death, do not locate goal under power lines that may come into contact with the goal as it is raised. Power lines should not be within 20 ft. radius of goal.
4. Two or three people in good physical condition and capable of lifting at least 90-100 lbs. (40-45 kg) each are recommended for safe installation and assembly.
5. Walls can contain electrical wires and other unseen hazards and obstacles. It is the installer's responsibility to locate and avoid these hazards during installation.

- If using a ladder during assembly, use extreme caution. Follow all warnings and cautions on the ladder carefully.
- Installation and assembly of this product will require lifting and bending that may result in injury to anyone not accustomed to this type of activity.
- Ensure there are no overhead power lines within a 20 ft. (7 m) radius of the goal location.
- Climate, corrosion or misuse could result in system failure.
- Only use parts provided with your Goalsetter® basketball goal system or replacement parts provided by Goalsetter Systems, Inc. Use of other parts (a) may cause the goal system to fail, (b) could result in death, serious injury or property damage, and (c) will void the warranty.
- With rim set at 6'-0" playing height, the minimum operational height is 5'-4" (1.625 m) to the bottom of the backboard.
- **DO NOT CLIMB OR HANG on the rim or any part of the goal system.** This includes the backboard, support braces and net. The product is not designed for such use and property damage or personal injuries such as cuts, broken bones, nerve, spinal cord or brain injury or death could occur.
- Use caution when performing dunking activities with this product.
- During play keep players' faces away from the backboard, rim and net or serious injury could result.
- Players must wear a mouth guard to avoid dental injuries.
- Do not wear jewelry (rings, watches, necklaces, etc.) or other loose objects that could become tangled in the net or injure another player.
- Before each use, check the goal system for loose hardware, excessive wear and signs of corrosion. Repair the system before use.
- **NEVER** play on damaged equipment.
- When adjusting the system height, keep hands and fingers away from moving parts. DO NOT allow children to adjust the system height.
- Check the goal system frequently for signs of corrosion. Remove surface rust and loose paint completely, and repaint with exterior enamel paint. If rust or corrosion has penetrated or pitted any components of the goal, DO NOT allow play and repair or replace parts immediately.
- DO NOT use the goal system to lift or hoist anything.
- Use caution when using this goal system. Most injuries are caused by misuse and/or not following these instructions.

IMPORTANT

Enclosed underneath the protective sheeting on your backboard is a warranty registration card. YOU MUST FILL OUT AND MAIL IN THIS CARD IN ORDER TO HAVE A VALID WARRANTY. You may also fill out a warranty registration online at www.goalsetter.com.

Retain this manual for future reference of operation, maintenance and parts information.

The information in this manual is based on the latest information available at the time of publication. Your goal may have product improvements and options not yet contained in this manual. Goalsetter Systems, Inc. reserves the right to make changes at any time without notice or obligation.

Contact the manufacturer if technical assistance is required.

Additional copies of these instructions are available from:

Goalsetter Systems, Inc.
1-800-362-GOAL (4625)
www.goalsetter.com

Goal Specifications

	GS72	GS60	GS54
Backboard Size:	42”x72”	38”x60”	36”x54”
Weight w/Acrylic:	225 lbs.	210 lbs.	185 lbs.
Weight w/Glass:	285 lbs.	260 lbs.	225 lbs.
(A) Height Range:	6’-10’	6’-10’	6’-10’
(B) Extension Distance: at 10’	33”	33”	33”
at 8’	44”	44”	44”
at 6’	39”	39”	39”
(C) Maximum Overhang:	69”	69”	69”
(D) Distance Rim to Backboard:	25”	25”	25”
(E) Distance Rim to Top of Goal:	33 3/4”	29 3/4”	27 3/4”
(F) Crank Distance:*	5”- 8”	5”- 8”	5”- 8”
(G) Crank Height:*	82”	82”	82”
(H) Height to Bottom of Frame:	88”	88”	88”
(I) Frame Size:	28”	28”	28”
(J) Top of Frame Height:	116”	116”	116”

* Dimensions (F) and (G) do not apply to fixed height goals.

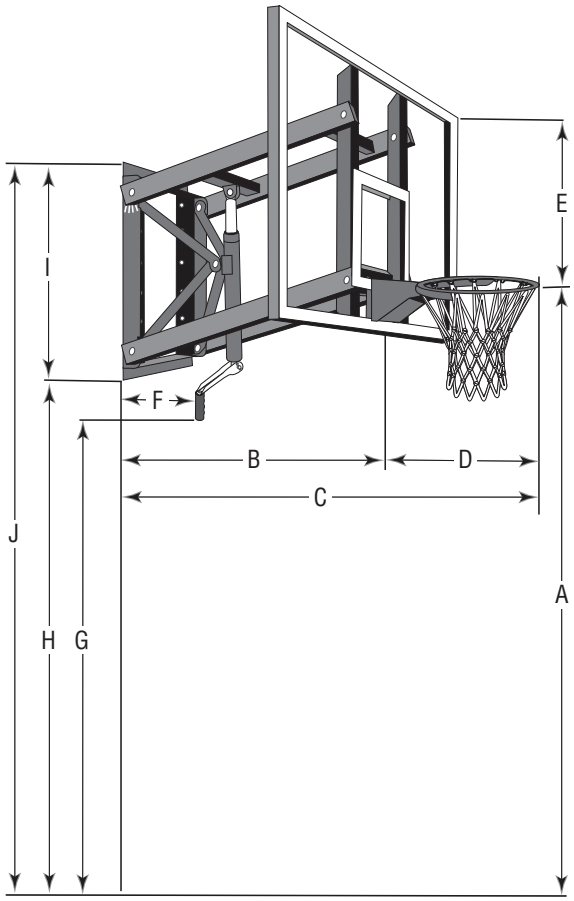

Playing Surface

IMPORTANT

Goalsetter Systems, Inc. cannot assume liability for the installation of any Wall Mounted structure. Goalsetter® Systems recommends consulting a professional architect or contractor to determine a safe wall anchoring system to match the wall construction being used in your application.

Determine Installation Location

Consider the following to determine where to install your Goalsetter Basketball Goal:

- The type and strength of structure to which the goal will be attached.
- When extended, will backboard overhang obstruct driveway or other important space? Maximum overhang: 69” (1.75 m) from the mounting surface to the front of the rim.
- Is there room so vehicles backing out of driveway do not strike backboard or rim?
- Will court markings be used?
- How much playing surface is needed?
- How much playing surface will be under the backboard? (Having the edge of the playing surface directly underneath the backboard can result in trip hazards and unpredictable ball action following a shot. Try to have as much playing surface as possible behind the backboard.)
- Other functions of playing surface (driveway, playground, etc.)
- Will the goal be at least 20 ft. (7 m) from any overhead power lines? (No overhead power lines should be within a 20 ft. (7 m) radius of the goal.)

Required Tools and Materials:

- Level
- Rubber Mallet
- 12’ Tape Measure
- Ratchet
- Stepladder
- Phillips Screwdriver
- 9/16”, 3/4” and 15/16” Sockets and Wrenches
- Wall Fasteners (not included, provided by customer or installer)
- Drill and Drill Bits (masonry if necessary)
- 1 1/8” Wrench

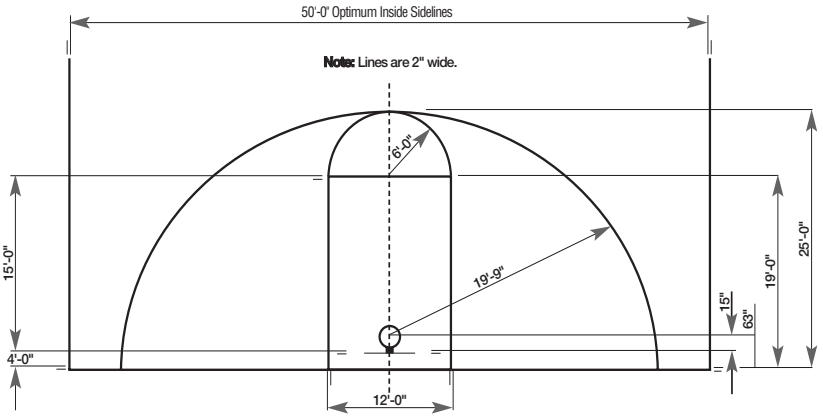

Court Markings
(Reference Only):

Regulation Court Lengths
High School: 84’
College & Professional: 94’

Frame Attachment

IMPORTANT

- Bottom of frame should be 88” up from playing surface. This is needed to achieve full range of goal height adjustability.
- Wall hanging location is the responsibility of the customer and/or installer.
- It is the responsibility of the customer and/or installer to determine how many of the frame’s 12 mounting holes must be used to safely secure the wall mount goal for play.
- Walls can contain electrical wires and other unseen hazards and obstacles. It is the installer’s responsibility to locate and avoid these hazards during installation. To avoid severe injury or death, do not locate goal under power lines.

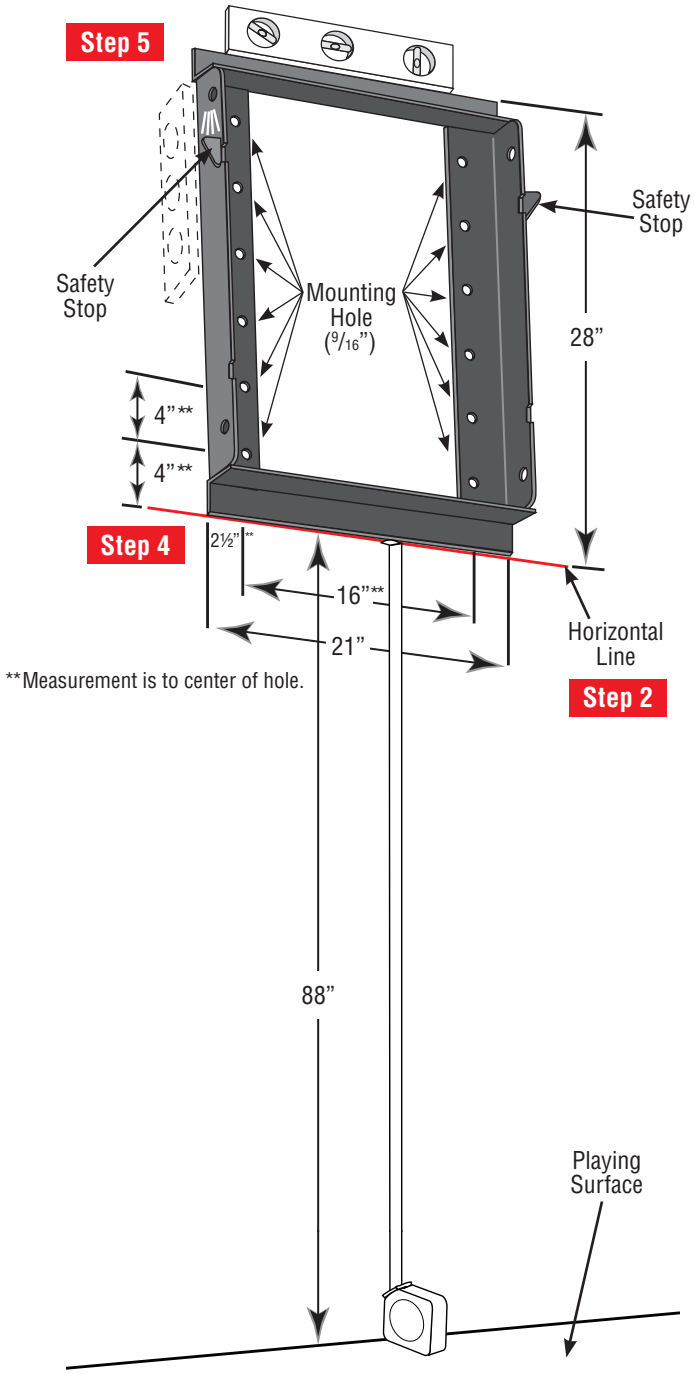

**Measurement is to center of hole.

WARNING

Two or three people in good physical condition and capable of lifting at least 90-100 lbs. (40-45 kg) each are recommended for safe installation and assembly.

Step 1: Determine where to place frame on mounting surface. The frame is 28” high x 21” wide. The frame holes are 16” on center.

TIME OUT TIP: Use a level to make drawing the horizontal line easier.

Step 2: Draw a horizontal line at least 21” (533 mm) on the mounting surface that is 88” (2.235 m) up from the playing surface.

Step 3: Unpack the frame. Lay aside extension arms, jack mounting brackets and jack.

Step 4: Position and center frame bottom on the horizontal line with the frame’s safety stops at the top.

Step 5: Level frame horizontally and vertically using a level. Mark the mounting holes needed for attachment of frame.

Step 6: Set frame down.

Step 7: Drill appropriate size holes as needed in mounting surface based upon type of wall fastener being used by customer or installer.

Step 8: Loosely attach frame to mounting surface using correct fasteners.

IMPORTANT

Fasteners to be determined and provided by the customer and/or installer.

Step 9: Level frame horizontally and vertically using a level and appropriately tighten fasteners.

TOOLS:

12’ Tape Measure, Level,
Drills and Wrenches (determined by customer and/or installer)

HARDWARE:

Wall Fasteners (determined and provided by customer and/or installer)

Frame Assembly

Adjustable Height Goals Only

⚠ WARNING

Two or three people in good physical condition and capable of lifting at least 90-100 lbs. (40-45 kg) each are recommended for safe installation and assembly.

TIME OUT TIP: The lower extension arm says "Best in Basketball™" and the upper extension arm says "Goalsetter.com". The jack mounting brackets are different lengths. Upper bracket is 20 ½" (52.07 cm). Lower bracket is 14" (35.56 cm).

Step 1: Unpack extension arms and jack mounting brackets.

TIME OUT TIP: Cross-brace of lower extension arm must face toward backboard.

Step 2: Making sure decal is right side up, align lower extension arm holes to outside holes of the frame flange. Then align holes in lower jack mounting bracket (14" – 35.56 cm) to inside holes of the frame flange. Connect using the following: two 5/8" x 2 ½" extension arm bolts, four flat washers and two locknuts. ***NOTE:*** **DO NOT** over-tighten. Snug tighten only.

Step 3: Making sure decal is right side up, attach the upper extension arms and upper jack mounting brackets (20 ½" – 52.07 cm) **to the frame flange** following the same procedure and hardware as in Step 2.

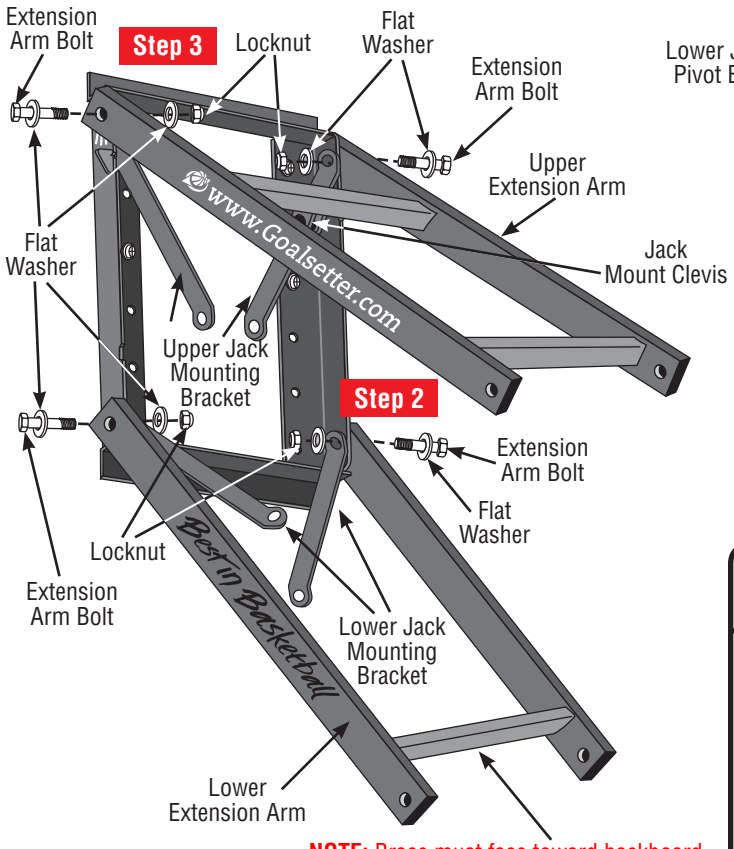

NOTE: Brace must face toward backboard.

Step 4: Attach upper mount of jack assembly to jack mount clevis on upper extension arm using the following: one upper jack pivot bolt, two flat washers, and locknut.
NOTE: **DO NOT** over-tighten. Snug tighten only.

Step 5: Attach lower mount of jack assembly to the upper and lower jack mounting brackets using the following: one lower jack pivot bolt, two flat washers, and locknut. ***NOTE:*** **DO NOT** over-tighten. Snug tighten only.

Step 6: Tighten all extension arm bolts to extension arms and mounting brackets. Tighten jack pivot bolts, but make sure free movement is maintained at the pivot points.

Step 7: Remove protective material from extension arms.

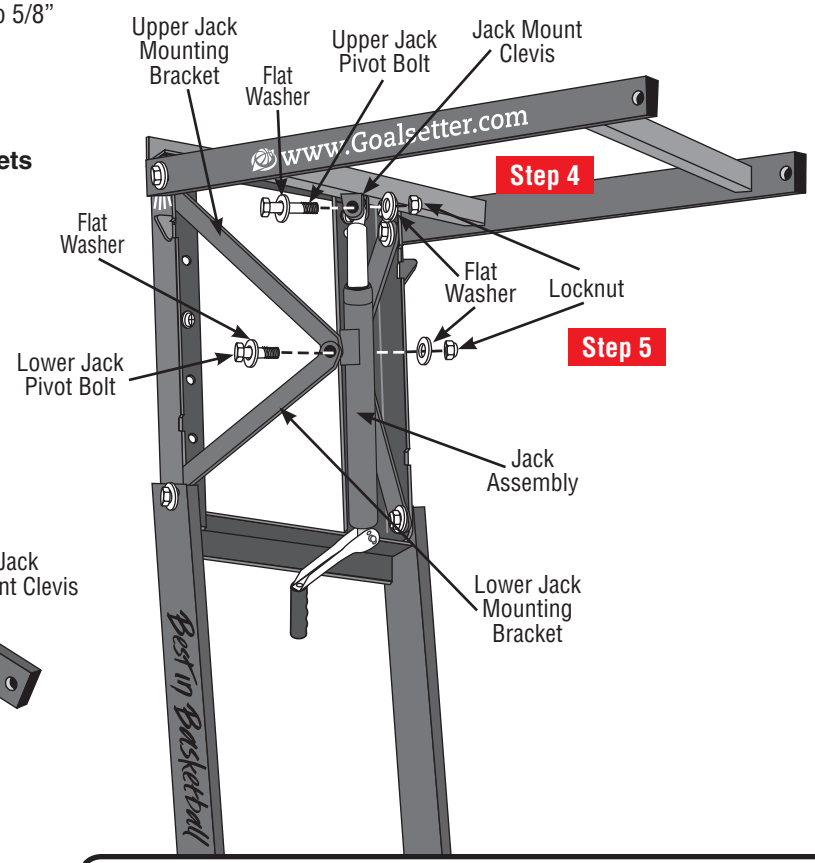

TOOLS:

Rubber Mallet, 15/16" Socket, 15/16" Wrench

HARDWARE:

5/8 x 2 1/2" Upper Jack Pivot Bolt (1)

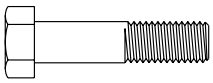

5/8" Locknut (6)

5/8" Flat Washer (12)

5/8 x 4 1/2" Lower Jack Pivot Bolt (1)

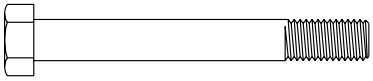

5/8 x 2 1/2" Extension Arm Bolt (4)

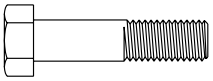

Frame Assembly

Fixed Height Goals Only

⚠ WARNING

Two or three people in good physical condition and capable of lifting at least 90-100 lbs. (40-45 kg) each are recommended for safe installation and assembly.

TIME OUT TIP: The lower extension arm says "Best in Basketball™" and the upper extension arm says "Goalsetter.com". The jack mounting brackets are different lengths. Upper bracket is 20 ½" (52.07 cm). Lower bracket is 14" (35.56 cm).

Step 1: Unpack extension arms and jack mounting brackets.

TIME OUT TIP: Cross-brace of lower extension arm must face toward backboard.

Step 2: Making sure decal is right side up, align lower extension arm holes to outside holes of the frame flange. Then align holes in lower jack mounting bracket (14" – 35.56 cm) to inside holes of the frame flange. Connect using the following: two 5/8" x 2 ½" extension arm bolts, four flat washers and two locknuts. ***NOTE:*** **DO NOT** over-tighten. Snug tighten only.

Step 3: Making sure decal is right side up, attach the upper extension arms (20 ½" – 52.07 cm) **and upper jack mounting brackets to the frame flange** following the same procedure and hardware as in Step 2.

Step 4: Set stabilizer bar length to 21 7/8" (32.70 cm) by turning the bar to lengthen or shorten. ***NOTE:*** After the goal is raised, further adjustment may be necessary to achieve a 10' or desired height.

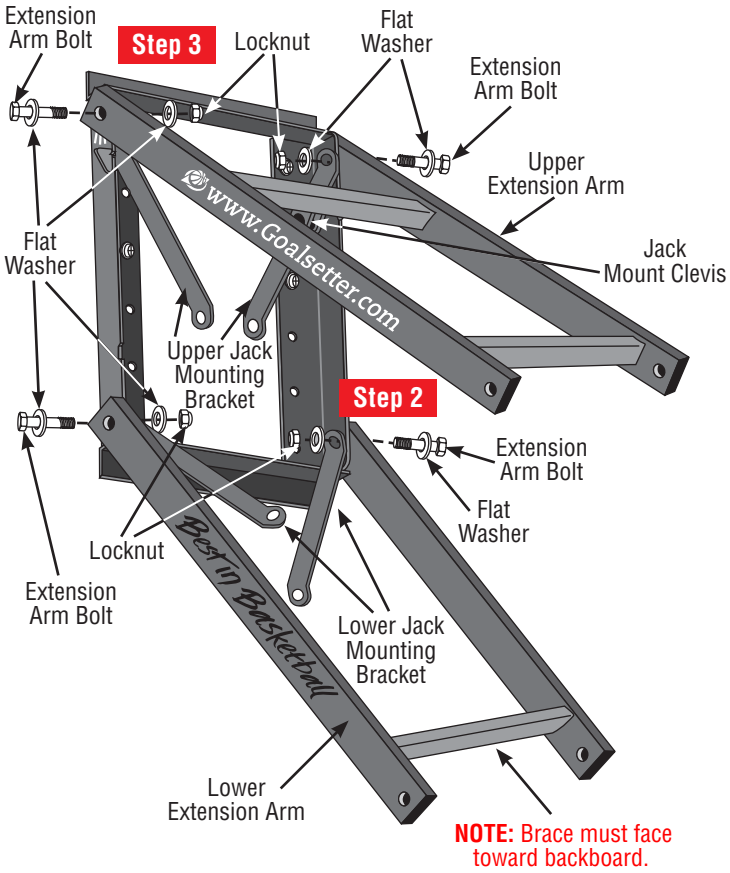

Step 5: Attach upper mount of stabilizer bar to jack mount clevis on upper extension arm using the following: one upper jack pivot bolt, two flat washers, and locknut. ***NOTE:*** **DO NOT** over-tighten. Snug tighten only.

Step 6: Attach the stabilizer bar to the lower jack mounting bracket using the following: one lower jack pivot bolt, two flat washers, and locknut. ***NOTE:*** **DO NOT** over-tighten. Snug tighten only.

Step 7: Tighten all extension arm bolts to extension arms and mounting brackets. Tighten upper and lower jack pivot bolts, but make sure free movement is maintained at the pivot points.

Step 8: Remove protective material from extension arms.

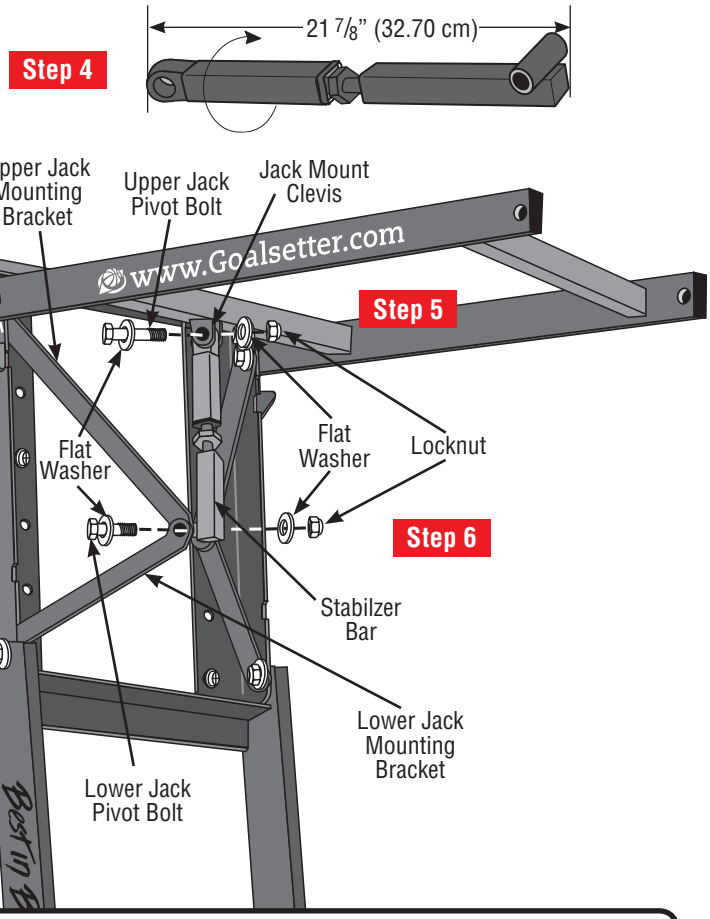

TOOLS:

Rubber Mallet, 15/16" Socket, 15/16" Wrench

HARDWARE:

5/8 x 2 1/2" Extension Arm Bolt (4) **5/8" Flat Washer (12)** **5/8" Locknut (6)**

5/8 x 2 1/2" Upper Jack Pivot Bolt (1) **5/8 x 4 1/2" Lower Jack Pivot Bolt (1)**

Backboard Attachment

WARNING

Backboards can weigh between 168 lbs. to 266 lbs. Two or three people in good physical condition and capable of lifting at least 90-100 lbs. (40-45 kg) each are recommended for safe installation and assembly.

IMPORTANT

Extension arms **MUST** be in the lowered position.

TIME OUT TIP: Lay the unopened box with Goalsetter® logo upside down AND let the lid open up and fold away from the goal mounting surface.

Step 1: Open lid of box containing the backboard and slide the backboard face down, with rim mounting plate facing towards the goal mounting surface.

Step 2: Carefully lift the backboard from the box and align upper backboard holes with upper extension arm holes using the following software: two ½" x 2 ½" backboard bolts, four flat washers, and two locknuts. ***NOTE:*** This is a pivot point! **DO NOT** over-tighten. Snug tighten, so that bushings in arms meet bushings in backboard.

TIME OUT TIP: Extension arms attach to the *outside* of backboard's H-frame.

Step 3: Align lower backboard holes with the lower extension arm holes using the same procedure and hardware as in Step 2.

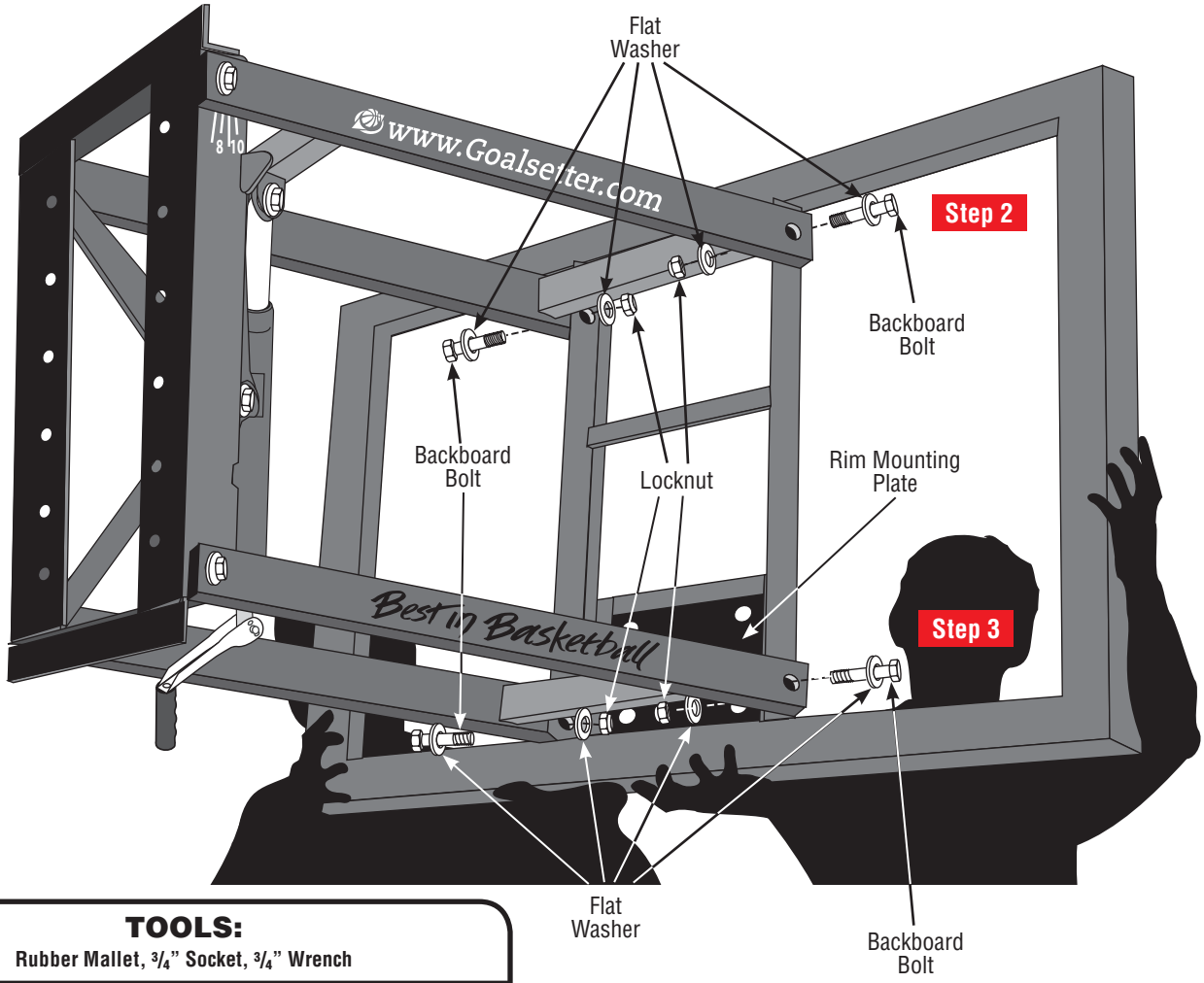

TOOLS:

Rubber Mallet, ¾" Socket, ¾" Wrench

HARDWARE:

½ x 2 ½" Backboard Bolt (4)

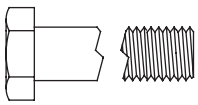

½" Flat Washer (8)

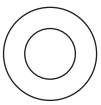

½" Locknut (4)

Rim Attachment

NOTE: Use all steps of the following instructions to install a reflex rim. To install a static rim, follow all steps *except* Steps 2 and 6.

TIME OUT TIP: Your warranty card is located behind protective sheeting. You **MUST** fill out and return this card to activate your warranty.

Step 1: Unpack rim. Remove any remaining cardboard edge protectors and protective sheeting from backboard.

IMPORTANT

- Four bushings are factory installed on the backboard. If loose, make sure to have them seated properly when tightening rim bolts. If missing, contact Goalsetter or dealer.
  DO NOT install rim without bushings. If the bushings are not in place, glass backboards can shatter and acrylic backboards can crack!
- Correct sequence of hardware installation **MUST** be followed during assembly.

Step 2: If not already removed, remove cover plate screws and cover plate from rim assembly.

Step 3: Starting with the top two mounting holes, loosely attach rim to backboard following the hardware sequence as shown in the illustration below. Snug tighten hardware.

Step 4: Repeat hardware sequence outlined in Step 3 for lower rim mounting holes.

Step 5: Level rim side to side and then fully tighten hardware.

Step 6: Position cover plate and attach with cover plate screws.

Step 7: Attach net to rim.

TIME OUT TIP: Level rim side to side before tightening backboard bolts.

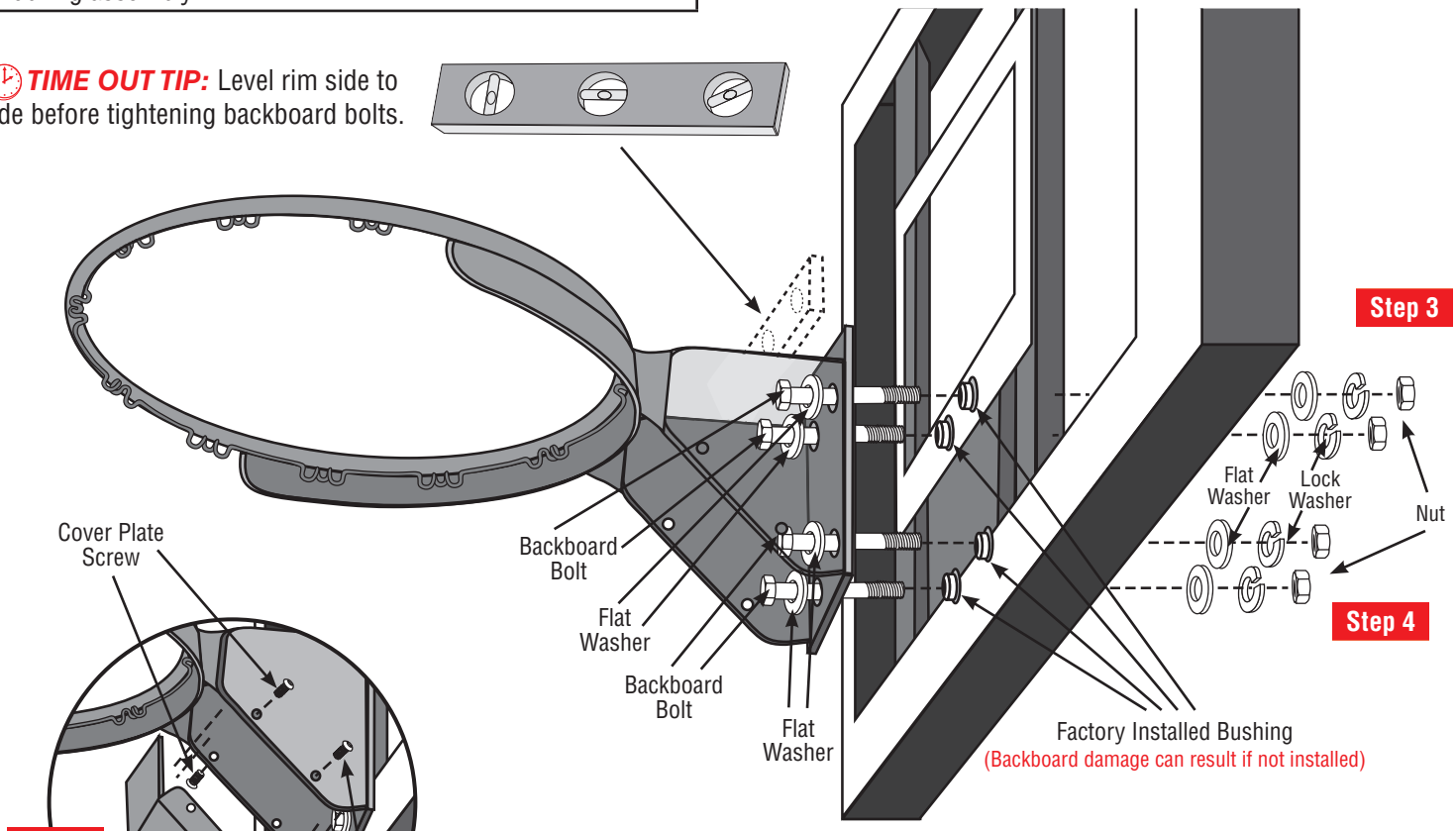

TOOLS:
Level, 9/16" Wrench, 9/16" Socket, Phillips Screwdriver

HARDWARE:

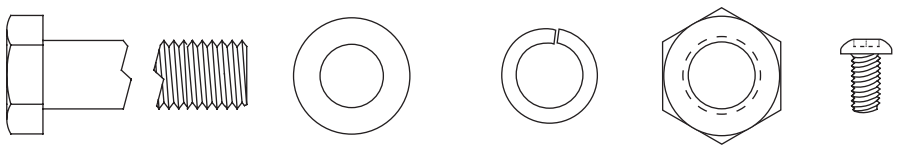

Raise and Adjust Backboard

Fixed Height Goals Only

⚠ WARNING!

To prevent serious injury or death, if using a stepladder, make sure it is in good condition, setting on a level and stable surface and do not exceed its weight rating.

Use two or three people to raise backboard assembly and hold it at the 10' position. They should be in good physical condition and capable of lifting at least 90-100 lbs (40-45 kg) each.

Step 1: Measure the distance from the playing surface to top of rim with a tape measure.

Step 2: Subtract the measured distance from 10' – this is the amount the goal will need to be adjusted.

Step 3: While one or two people hold up backboard, remove the upper jack pivot bolt, washers and locknut from the jack mount clevis on upper extension arm.

IMPORTANT

DO NOT over-extend threaded rod in stabilizer bar. If total length needed is over 22 ½" (57.15 cm), **DO NOT USE**. Call Goalsetter or your local dealer for a custom-length stabilizer bar.

Step 4: Lengthen or shorten the stabilizer bar by turning it ½ turn for every ¼" of adjustment needed (or 1 full turn for every ½" adjustment needed).

Step 5: Re-attach stabilizer bar to the jack mount clevis on upper extension arm using the hardware removed in Step 3.

Step 6: Repeat steps 1-5 until a rim height of 10' is achieved.

IMPORTANT

After all height adjustments have been completed, make sure all hardware is properly tightened, including stabilizer bar locking nut. Nut should be tightened toward the top of threaded rod, against top stabilizer bar section using a 1⅛" wrench.

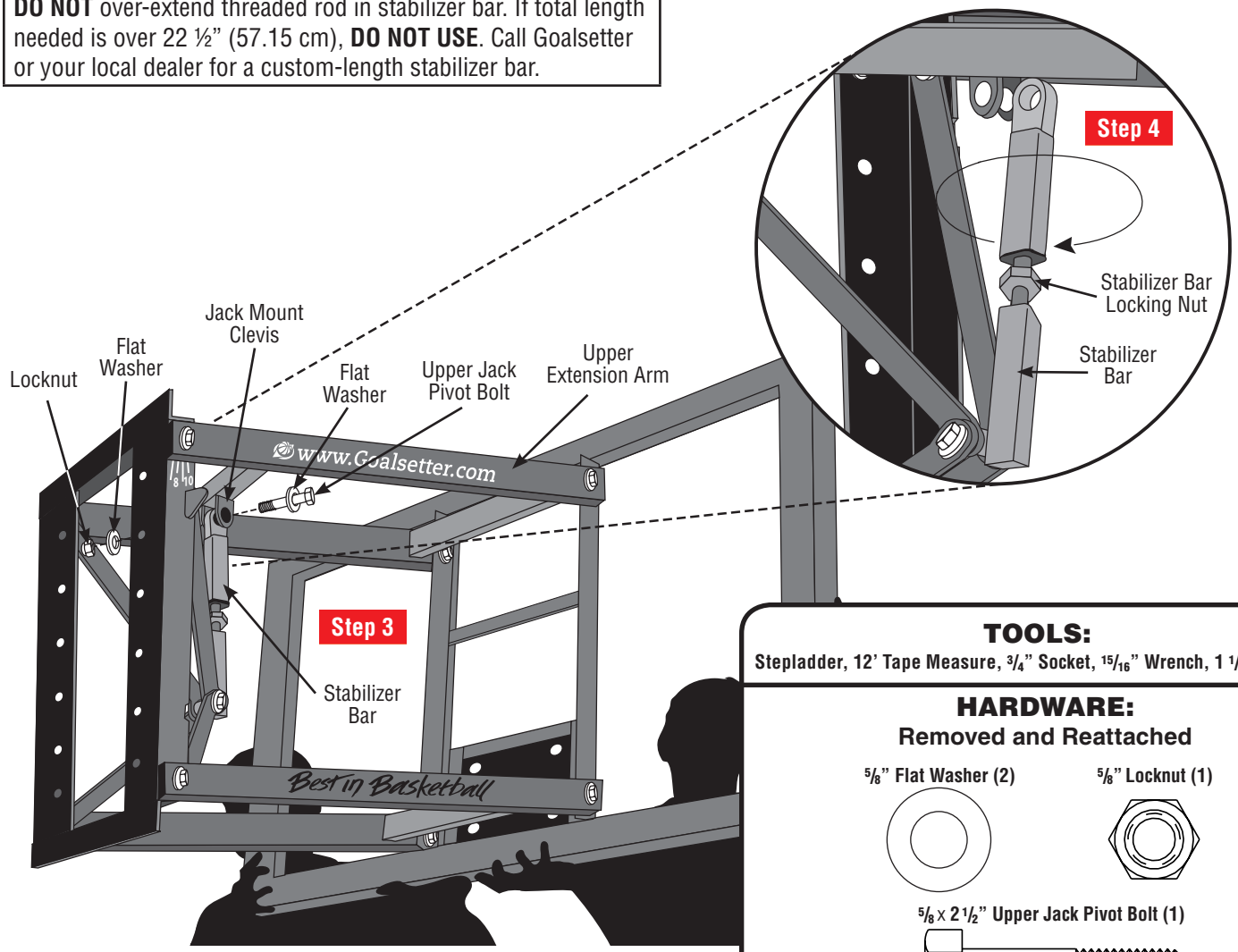

TOOLS:

Stepladder, 12' Tape Measure, ¾" Socket, 15/16" Wrench, 1 1/8" Wrench

HARDWARE:

Removed and Reattached

⅝" Flat Washer (2)

⅝" Locknut (1)

⅝ x 2½" Upper Jack Pivot Bolt (1)

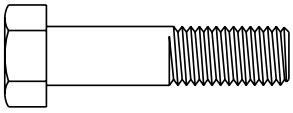

Height Indicator Attachment

Adjustable Height Goals Only

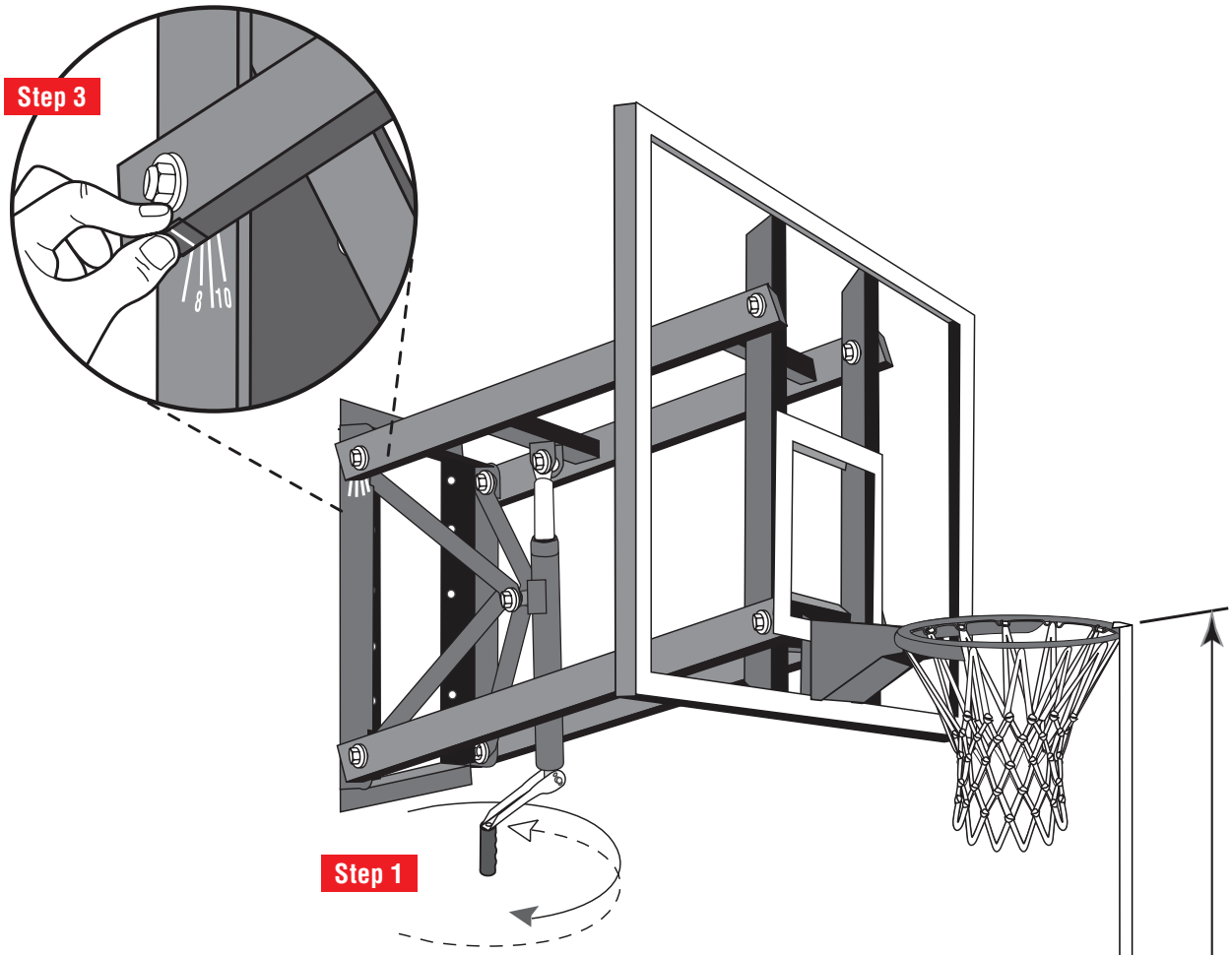

Step 1: Position top of rim 10’ above playing surface by turning crank handle.

Step 2: Measure distance with a tape measure for accuracy.

Step 3: Align height indicator bar decal with 10’ mark on frame and attach to bottom of upper extension arm.

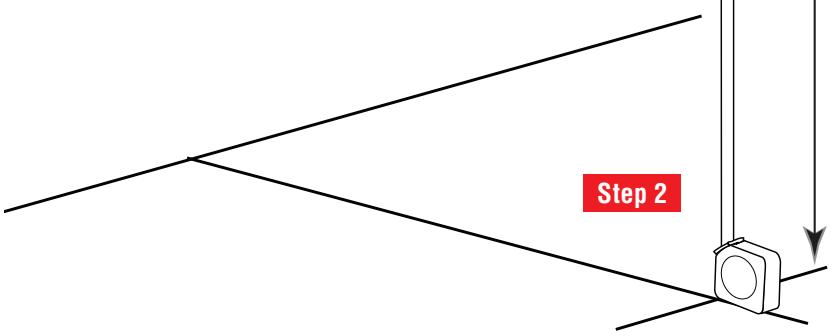

TOOLS:
12’ Tape Measure

DECAL:

Ready to Play

Operation

Crank handle turns clockwise for goal to go up, crank handle turns counter clockwise for goal to go down.

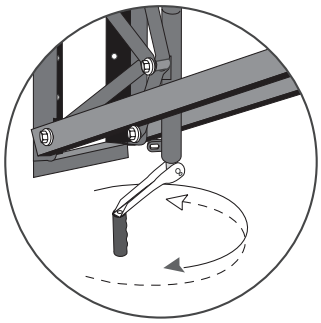

Height indicator indicates goal height from 6’ to 10’.

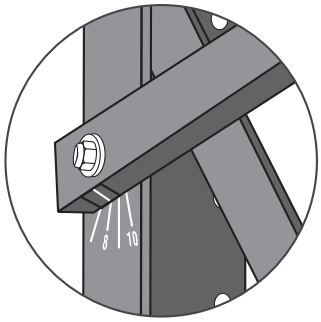

Maintenance

The life of your basketball goal system depends on many variables. The climate, exposure to corrosives such as salt, organic materials, pesticides, or herbicides, and excessive use or misuse can all contribute to failure of the goal system, which may cause property damage or personal injury. Before each use, check the goal system for loose hardware, excessive wear, abuse, or vandalism or signs of rust or corrosion.

For safety reasons, and to prolong the life of your basketball system, you must take the following preventative measures:

- Check all nuts and bolts. Inspect the threads and replace if necessary. If any are loose, tighten them.
- Check all parts for excessive wear and tear. If necessary, replace any parts that have been worn or damaged through usage.
- Check all sections of the goal system for visible rust or chipped or cracked paint, and if present, repair appropriately. See Paint Touch-Up on this page.

IF RUST OR CORROSION HAS PENETRATED ANY COMPONENT, DO NOT ALLOW PLAY ON THE GOAL AND REPLACE PARTS IMMEDIATELY.

- Contact Goalsetter Systems, Inc. for replacement parts. Only use parts provided by Goalsetter Systems, Inc. Use of other parts (a) may cause the goal system to fail, (b) could result in death, serious injury or property damage, and (c) will void the warranty.
- Inspect the Warning Sticker on the pole. If it is ripped, faded or illegible, contact Goalsetter Systems, Inc. to request a replacement Warning Sticker.

Cleaning

The exterior finish of your Goalsetter® goal is designed for outdoor environments and should only require periodic cleaning and inspection for imperfections that could develop over time.

When cleaning is necessary, Goalsetter recommends using water and a mild dish detergent applied with a soft, non-abrasive cloth.

IMPORTANT

DO NOT use abrasive cleaners to clean the goal. Damage to the finish may result.

Paint Touch-Up

Goalsetter Systems, Inc. uses a two-part acrylic-enamel paint on the goals. With periodic inspection and service when needed, the high-gloss finish is designed to last for many years. A small bottle of black paint with brush is provided in the hardware kit for touch up of imperfections as they develop. If more touch up is required, please contact Goalsetter Systems, Inc. or your local Goalsetter Dealer.

Lubrication

The jack is pre-lubricated. As with any mechanical component, periodic inspection and service is required. Goalsetter Systems, Inc. recommends applying lubrication each spring and fall to keep a smooth operation of the height actuator. Failure to do so could result in jack failure and not be covered under warranty.

Lubricate jack. Add a liberal amount of lubricating oil to the oil hole located at end of jack extension arm.

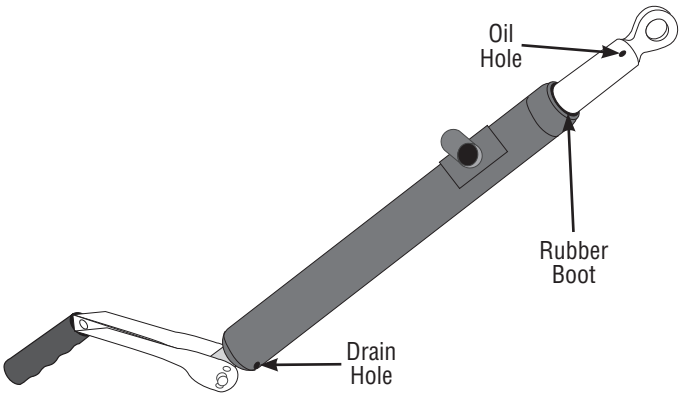

IMPORTANT

A general-purpose lubricating oil like “3-in-1” or lightweight motor oil is recommended. **DO NOT** use a penetrating oil (i.e. WD40.) Contact Goalsetter Systems, Inc. or your local Goalsetter Dealer for questions.

Warranties

IMPORTANT

Enclosed underneath the protective sheeting on your backboard is a warranty registration card. **YOU MUST FILL OUT AND MAIL IN THIS CARD IN ORDER TO HAVE A VALID WARRANTY.** You may also fill out a warranty registration online at www.goalsetter.com.

LIMITED WARRANTY

LIMITED LIFETIME WARRANTY: Subject to proper installation and normal, intended use, and subject to the limitations set forth below, Goalsetter Systems, Inc. warrants to the original retail purchaser that all structural components of Goalsetter Systems™ Signature Series*, Extreme Series** and GS Wall Mount Series*** basketball systems are free of defects in material and workmanship for the duration of ownership by such original retail purchaser or five (5) years after discontinuation of the product by Goalsetter Systems, Inc..

*Signature Series – MVP, Captain, All-American, All-Star, Contender, Champion;
**Extreme Series – X672, X660, X560, X554, X454, X448;
***GS Wall Mount Series – GS72 Wall Mount, GS60 Wall Mount, GS54 Wall Mount, GS48 Wall Mount

LIMITED WARRANTY: Subject to proper installation and normal, intended use, and subject to the limitations set forth below, Goalsetter Systems, Inc. warrants to the original retail purchaser that all structural components of (a) Goalsetter Systems™ Tournament Series Elite Plus and GS Baseline Wall Mount Series* basketball systems are free of defects in material and workmanship for a time period of five (5) years from date of purchase (b) Goalsetter Systems™ Junior MVP and GS Junior Wall Mount basketball systems are covered for a time period of two (2) years from date of purchase.

*GS Baseline Wall Mount Series – GS72 Baseline, GS60 Baseline, GS54 Baseline

Any warranty on a basketball system excludes the rim. Rim warranties are as follows: Rims shall be free from defects in materials and workmanship from the date of purchase as follows: R10126 Single Ring Static Rim: one (1) year limited warranty; R10226 Double Ring Static Rim: unconditional lifetime warranty; R10326 HD Breakaway Rim: two (2) year limited warranty; R10554 GS Collegiate Breakaway Rim: one (1) year limited warranty.

Padding Warranty: Padding shall be free from defects in materials and workmanship from the date of purchase as follows: Multi-Purpose Backboard Edge Padding: one-year limited warranty; Custom Fitted Pole Padding: one-year limited warranty; Wrap Around Pole Padding: one-year limited warranty.

The Limited Lifetime Warranty and the Limited Warranty shall cover damage or failure that occurs during the course of **NORMAL** or **INTENDED USE** of the product. Normal or intended use shall be described as activity that is necessary for the participation in the sport for which the equipment is designed. **NOT COVERED** is damage caused by deliberate hanging, multiple player hanging, vandalism, non-basketball activities or any other activity that could be regarded as abusive. Goalsetter Systems™ Junior MVP and GS Junior Wall Mount warranty voided if damage caused by the act of dunking.

A limited lifetime warranty is effective for the duration of ownership by the original retail purchaser or 5 years after discontinuation of the product by Goalsetter Systems, Inc.

Goalsetter Systems, Inc. shall have the right to require the purchaser to deliver at its expense the allegedly defective product to Goalsetter for testing, repair or replacement. Goalsetter shall not be responsible for any expenses associated with the replacement or removal of the product from its application for such delivery.

THE WARRANTY IS VOID IF THE PRODUCT HAS BEEN DAMAGED BY ACCIDENT, USE FOR PURPOSES FOR WHICH IT IS NOT INTENDED, AS THE RESULT OF IMPROPER INSTALLATION, FAILURE TO FOLLOW INSTALLATION, CARE OR MAINTENANCE INSTRUCTIONS PROVIDED WITH THE PRODUCT, USE OF PARTS NOT PROVIDED BY GOALSETTER SYSTEMS OR ANY MODIFICATION OF ANY PRODUCT BY THE CUSTOMER UNLESS APPROVED BY GOALSETTER SYSTEMS, INC., OR OTHER CAUSES NOT ARISING OUT OF DEFECTS IN MATERIALS OR WORKMANSHIP.

The sole obligation of Goalsetter Systems, Inc., and the exclusive remedy under the applicable warranty, is repair or replacement of any component part determined by Goalsetter Systems, Inc. to be defective and covered by the warranty. Goalsetter Systems, Inc. will not be liable for any other damages or expenses. The applicable warranty is expressly in lieu of all other warranties, express or implied. Goalsetter Systems, Inc. does not assume, and no other person or representative is authorized to assume for Goalsetter Systems, Inc. any other liability in connection with the sale of Goalsetter System™ products.

NOT COVERED BY WARRANTY
- Use in non-residential applications of Glass backboards on Signature Series systems.
- Use in non-residential applications of Extreme Series and Tournament Series complete systems.
- Any products subjected to abuse, negligence, improper installation, vandalism, acts of God, alteration of product and any other events beyond the control of Goalsetter Systems, Inc.
- Junior Series breakage caused by the act of dunking.
- Paint or rusted parts. Touch-up paint is included in all hardware kits.
- Deterioration of product due to time or wear and tear.

Normal deterioration of products due to atmospheric conditions, weather, wear and tear (including scratching or scuffing paint from normal use), or other causes that do not affect functional use are not covered by Goalsetter Systems, Inc. warranties. All warranties are valid only when product is used in the intended application & when installed according to Goalsetter Systems instructions. Warranty may be void if maintenance instructions in the Owner's Manual are not followed. If you did not receive an Owners Manual, please call 1-800-362-4625 and one will be mailed to you.

DISCLAIMERS: THE APPLICABLE WARRANTY IS EXPRESSLY IN LIEU OF ALL OTHER WARRANTIES, EXPRESS OR IMPLIED. AND ALL OTHER WARRANITES ARE HEREBY DISCLAIMED, INCLUDING BUT NOT LIMITED TO THE IMPLIED WARRANTIES OF MERCHANTABILITY AND FITNESS FOR A PARTICULAR PURPOSE. UNDER NO CIRCUMSTANCES SHALL GOALSETTER SYSTEMS, INC. BE LIABLE FOR ANY INDIRECT, CONSEQUENTIAL, SPECIAL, INCIDENTAL, PUNITIVE, OR EXEMPLARY DAMAGES OF ANY KIND.

THE PRODUCT IS INTENDED TO BE USED TO PLAY THE SPORT OF BASKETBALL. ALL SPORTS INVOLVE RISK OF INJURY. THE USER ASSUMES ALL RISK OF INJURY RESULTING FROM THE USE OF THIS PRODUCT. ALL PRODUCTS ARE SOLD ON THIS CONDITION AND NO REPRESENTATIVE OF THE COMPANY MAY WAIVE OR CHANGE THIS POLICY.

Some states do not allow the exclusion or limitation of implied warranties or consequential or incidental damages, so the above limitations or exclusions may not apply to you.

LEGAL REMEDIES: This warranty gives you specific legal rights, and you may also have other rights which may vary from state to state.

WARRANTY CLAIMS: All returns must be arranged through the Goalsetter Systems, Inc. dealer where the product was originally purchased. Warranties do not cover dealer service charges, labor charges, freight charges, and travel expenses associated with replacement, repair or removal of warranty items. Photos of the damaged product prior to any repair or clean-up actions must clearly show and permit analysis of the damaged product by Goalsetter Systems, Inc. A Goalsetter® Warranty Claim form must be completed, and photos submitted, together with proof of purchase, for any item you wish to claim under warranty. If the purchase was not made through a dealer, this form is available by email, fax or mail. In response to your claim, you will receive an order confirmation as well as a notice stating whether Goalsetter Systems, Inc. needs your warranty item returned. Goalsetter Systems, Inc. will notify you by fax or phone if we determine that the item cannot be claimed under warranty. **Goalsetter Systems, Inc. is not responsible for any charges for labor to install or repair defective product without prior authorization. Goalsetter Systems, Inc. will determine the most economical method to either repair or replace product before any work is to commence.**

Questions or Comments?
Phone 800.362.4625
Fax: 641.594.3343
Email:info@goalsetter.com
www.goalsetter.com

GOALSETTER® and GOALSETTER BASKETBALL logo are registered trademarks of Goalsetter Systems, Inc. in the United States. GOALSETTER SYSTEMS™ and BEST IN BASKETBALL™ are trademarks of Goalsetter Systems, Inc.

This product is covered by various U.S. and Canadian patents, including U.S. Patent #5,211,393. Patent infringement will be prosecuted.

No part of this manual may be reproduced in any form or by any means electronic or mechanical, including photocopying, recording, or by any information storage and retrieval systems without the express written consent of Goalsetter Systems, Inc.

Copyright 2006.
All rights reserved.
Revised 1/2015
GS IM350WM