BODY CHAMP®

BCR1000 BCR890
VERTICAL STEPPER CLIMBER

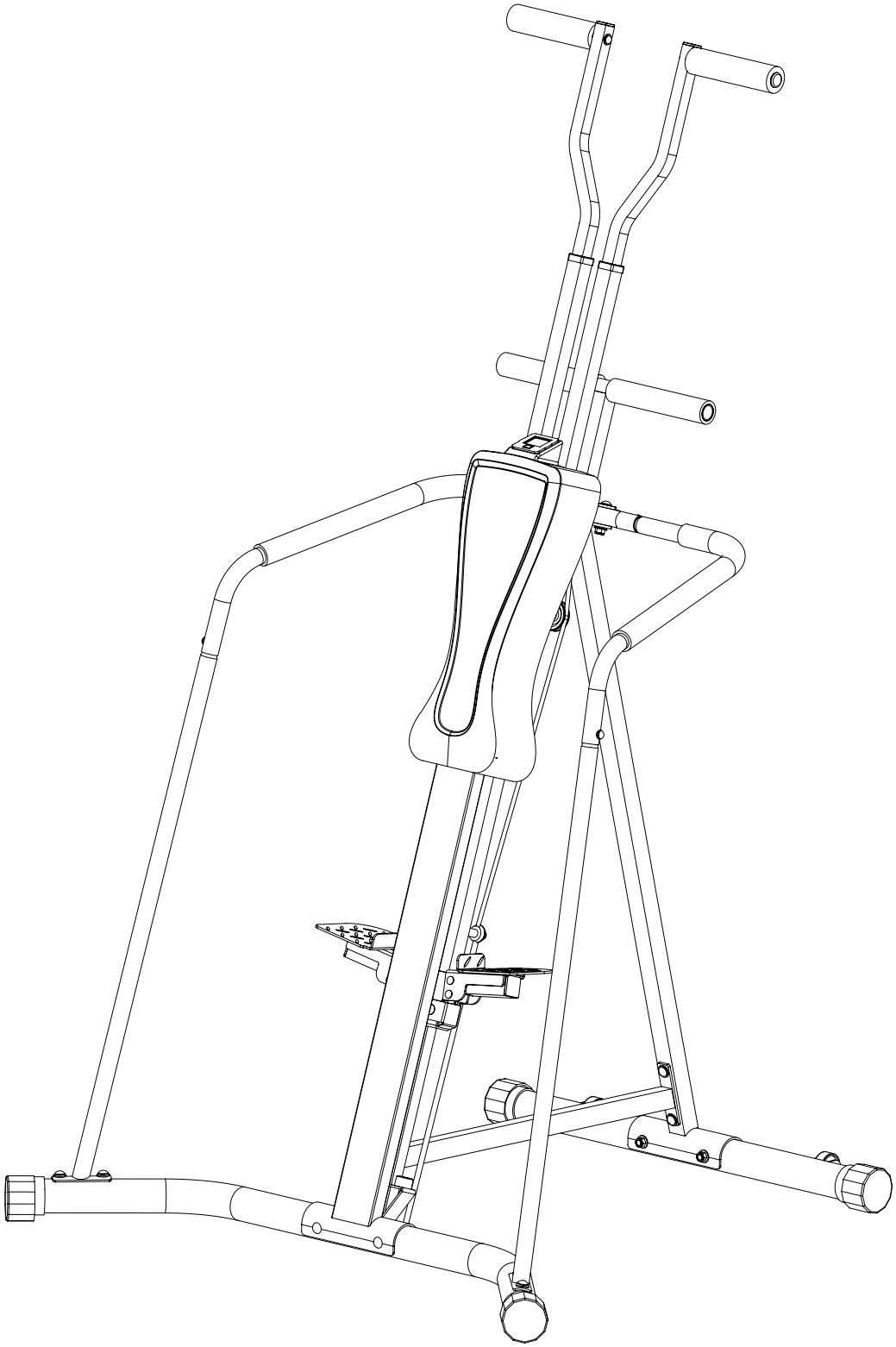

This product is intended for indoor, home use only and is not to be used in a commercial setting.

OWNER'S MANUAL

PLEASE KEEP THESE INSTRUCTIONS FOR FUTURE USE & REFERENCE.
DO NOT DISCARD.

WARNING: SERIOUS INJURIES AND EVEN DEATH CAN OCCUR IF THE PROPER SAFETY PRECAUTIONS ARE NOT FOLLOWED.

The diagram below highlights and reviews many of the important Safety and Warning labels also found on the unit. Please ensure any user of the unit familiarizes themselves with these Safety and Warning guidelines before use.

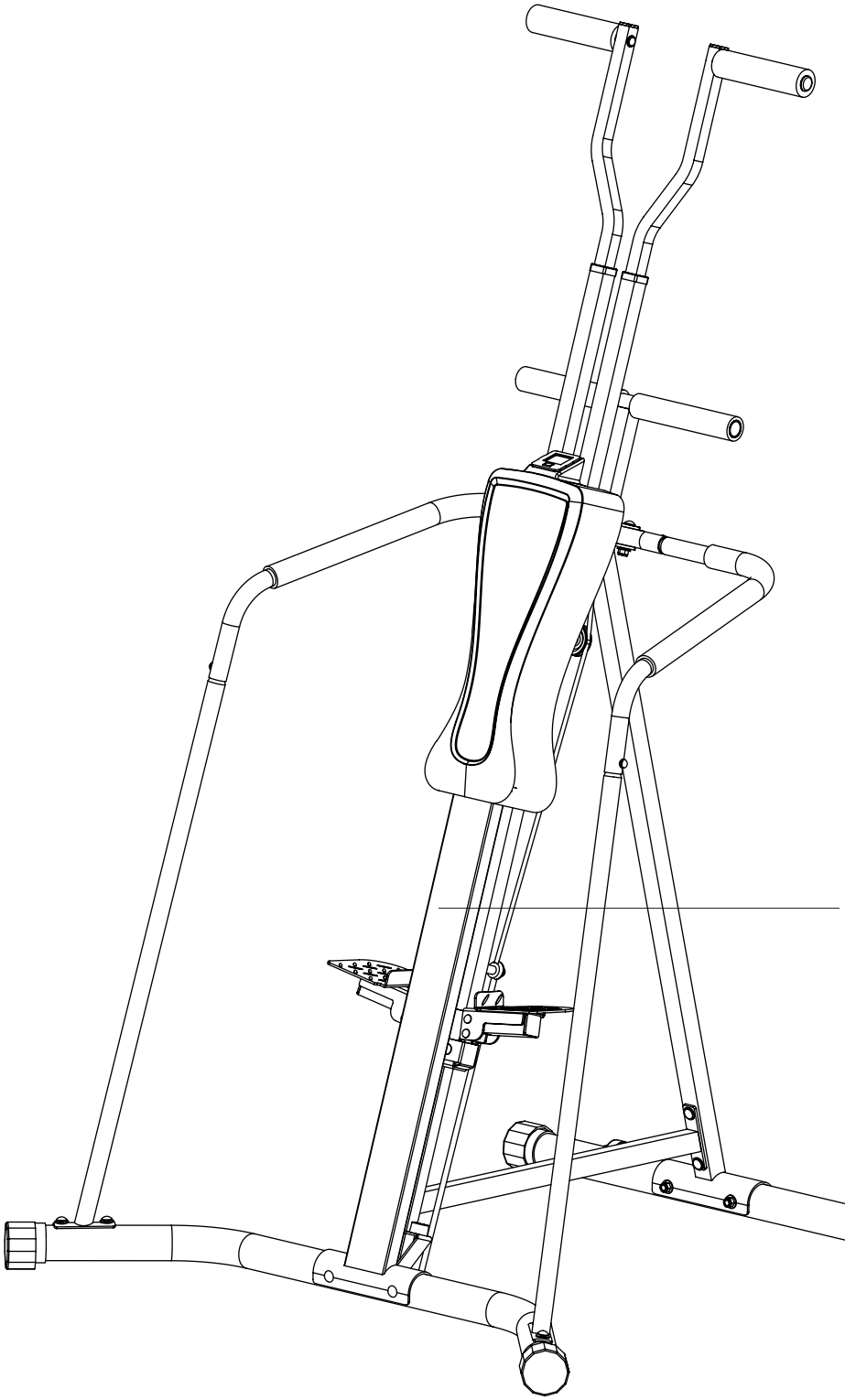

⚠ WARNING !

The use of this exercise equipment involves a **RISK OF PHYSICAL INJURY** as well as property damage, which can be minimized by observing the following guidelines:

1. **ALWAYS** wear comfortable clothing and shoes with good traction.
2. **ALWAYS** make sure all nuts and bolts are secured before use. TIGHTEN PEDAL HINGE BOLTS EVERY 30 DAYS.
3. **STOP EXERCISING** if you become dizzy, nauseous, have irregular hearbeats or breathing difficulties. Contact your physician immediately.
4. **ALWAYS** keep a large mat under the equipment to protect the floor or carpet.
5. **ALWAYS** use your equipment in a warm, dry, level, well-lit and ventilated indoor area.
6. **ALWAYS** keep body and clothing free and clear of moving parts.
7. **ALWAYS** keep your equipment clean and free of dust, moisture, debris and loose objects.
8. **NEVER** use the equipment if you are injured or have a physical condition that impairs your balance. DO NOT exercise under the influence of medication or alcohol.
9. Keep all children away from this equipment. **NEVER** allow small children or pets to approach the equipment. It is not a toy.
10. **NEVER** use the equipment if you exceed its weight limit of 250 lbs.
11. **NEVER** use the equipment if it does not function properly.
12. This equipment meets ASTM F1749 standards for fitness equipment.
13. Refer to the Owner's Manual for additional warnings and safety information.
14. The possibility of serious injuries or death, or both,(if applicable) if caution is not used.

General Information

Safety

Before you undertake any exercise program, please be sure to consult with your doctor.
Frequent strenuous exercise should be approved by your doctor and proper use of your product is essential.
Excessive or incorrect training may result to health injuries.
Please read this manual carefully before commencing the assembly of your product or starting to exercise.

- Please keep all children away from this item when in use. Do not allow children to climb or play on this item when it is not in use.
- Supervise teenagers while they use this unit.
- For your own safety, always ensure that there is at least 3 feet of free space in all directions around your product while you are exercising.
- Regularly check to see that all nuts, bolts and fittings are securely tightened. Periodically check all moving parts for obvious signs of wear or damage.
- Any adjustment devices that could interfere with the user's movement on this unit should not be left projecting.
- Clean only with a damp cloth, do not use solvent cleaners. Lubricate the moving parts of your unit every 30 days with a silicone-based grease or product.
  If you are in any doubt, do not use your product; contact CUSTOMER SUPPORT.
- Before use, always ensure that your product is positioned on a solid, hard-flat surface.
- Do not place on carpet. If necessary, use a rubber mat underneath to reduce the possibility of slipping.
- Always wear appropriate clothing and footwear such as training shoes when exercising. Do not wear loose clothing that could become caught in moving parts during exercise.
- Do not use this unit if it is not functioning properly or if it is not fully assembled.
- Do not use this unit for commercial purposes. This unit is for home use only.
- Before use, you must read and understand all instructions & warnings stated in this Owner's Manual as well as posted on the equipment.
- It is the facility owner's responsibility to properly instruct users on the proper operation of the equipment and to warn them of the potential hazards.
- If at any time during exercise you feel faint, dizzy or experience pain, stop and consult your physician.

Assembling Tools

- Ruler with both Metric and English measurements
- 2 x Adjustable Wrenches
- 1 x Philips ("Crosshead") Screw Driver

Weight Limit

Your product is suitable for users weighing :
250 pounds or less

Storage and Use

Your product is intended for use in clean dry conditions. You should avoid storage in excessively cold or damp places as this may lead to corrosion and other related problems.

Warranty

Body Flex Sports warrants your product for a period of 1 year for the frame and 90 days on all parts if the item is used for the intended purpose, properly maintained and not used commercially.

Any alterations or incorrect assembly of the product will void this warranty.

Proof of purchase must be presented for any warranty validation (no exceptions). This warranty applies to the original purchaser only and is not transferable.

This warranty does not cover abuse or defects caused during use, storage or assembly. During the warranty period, Body Flex Sports reserves the right to:

1. provide replacement parts to the purchaser in an effort to repair the item.
2. repair the product returned to our warehouse (at the purchaser's cost).
3. replace the product if neither of the two previously mentioned actions effect repair. This warranty does not cover normal wear and tear on upholstery.

Questions

If you have any questions concerning the assembly of your item or if any parts are missing, please **DO NOT RETURN THE ITEM TO THE STORE OR CONTACT THE RETAILER.**

Our dedicated customer service staff can help you with any questions you may have regarding the assembly of this unit and can also mail you replacement parts.

Customer Support

Customer Support is open 9:00 a.m. to 5:00 p.m. (Pacific Time) Monday through Friday.

Please contact us by any of the following means :

Body Flex Sports, Inc.
21717 Ferrero Parkway, Walnut, CA 91789
Telephone: 1 (888) 266 - 6789
Fax: 1 (909) 598 - 6707
Email: info@bodyflexsports.com

Before Assembly

⚠ WARNING

1. Take a few minutes to familiarize yourself with the parts and hardware included with your product.
2. Assembly may require two people.
3. Check the frame for any damage and check any wiring (if present) for rips or tears. If you detect damage, rips, or tears, please contact our Customer Support Team before beginning any assembly.
4. Make sure all the hardware needed is included.
5. It is very important to follow the assembly instructions correctly and to make sure all parts are attached correctly and firmly tightened when the assembly process is complete.
6. Parts that are not tightened correctly will seem loose and can cause irritating noises and will cause damage to the equipment.

PLEASE NOTE : Many of the parts and hardwares listed on the parts list are already *pre-assembled* or installed on the unit.

Nylon Lock Safety Nuts

1. It is only necessary to tighten the bolts and nuts to “finger tight” during the assembly process. This will make it easier to complete certain steps by allowing more tolerance for all the parts to fit properly.
2. Do not tighten all the nuts onto the bolts securely until after you have completed assembly of your product.
3. Use wrenches, pliers, or ratchet and sockets to tighten the bolts and nuts.
4. The Nylon Nut should thread onto the Hex Bolt until the end of the Hex Bolt has passed through the Nylon insert inside the Nut. Please follow this guideline everytime you see this *Nylon Nut icon* throughout the assembly steps.

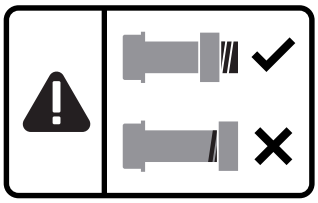

Tools Required For Assembly

Tool	Description/Purpose
Ruler (with both Metric and English measurements) QTY: 1	Use to measure the length or size of hardware including bolts to ensure you are using the correct part.
Adjustable or flat wrenches QTY: 2	Use to securely install parts including nuts and bolts.

Part Listing

The following parts list describes all of the parts illustrated on the exploded diagram on the following page.
PLEASE NOTE: most of these parts are already pre-assembled on your unit.

#	Description
01	Main Frame
02	Support Tube
03L	Left Upper Slide Rails
03R	Right Upper Slide Rails
04L	Left Lower Slide Rails
04R	Right Lower Slide Rails
05	Rear Stabilizer
06	Front Stabilizer
07L	Left Handle Bar
07R	Right Handle Bar
08L	Left Support Tube
08R	Right Support Tube
09	Base Tube
10L	Left Pedal
10R	Right Pedal
11	Hand Grip
12	Hand Grip Foam (Φ20xΦ40x160 mm)
13	Round End Cap (Φ22 mm)
14	Square End Cap (20 mm)
15	Washer (M6)
16A	Bolt (M6x20 mm)
17	Bolt (M8x45 mm)
18	Washer (M8)
19	Nylon Nut (M8)
20	Bolt (M8x20 mm)
21	Carriage Bolt (M8x67 mm)
22	Transport Wheel (Φ40x20 mm)
23	End Cap for Front Stabilizer (Φ50 mm)
24	End Cap
25	Clip
26	Square Sleeve (25 mm)
27A	Bolt (M6x15 mm)
28	Arc Washer (M6)
29	Handle Bar Foam

#	Description
30	Arc Washer (M8)
31	Square End Cap (30 mm)
32	Pulley (φ38xφ25x44 mm)
33	Pulley (φ44xφ33x44 mm)
34	Bearing (608ZZ)
35	Spring Washer (M8)
36	Pulley (φ100 mm)
37	Pulley (φ50 mm)
38	Wire Plug (φ12 mm)
39	Screw (ST4.2×12 mm)
40A	Monitor
41	Sensor
42	Shroud
43	Bungee Cord (Φ10x300 mm)
44	Bolt (M8x15 mm)
45	Bumper
46	Screw (M5x15 mm)
47	Bolt (M8x65 mm)
48	Spacer
49	Wheel (φ40xφ30x22 mm)
50	Magnet
51	Cable (φ5x1280 mm)
52	Spacer
53	Bolt (M8x40mm)
54	Bracket
55	Washers
56	Nylon Nut (M10)
57	Fixed Handlebar/Transport Handle
58	Fixed Handlebar/Transport Handle Grip Foam
59	Round End Cap
60	Screw

Exploded View

The following diagram is provided to help you familiarize yourself with the parts and hardware that will be used during the assembly process.

PLEASE NOTE : Not all of the parts and hardware you see here will be used while you are assembling the machine because some of these items are already pre-installed. Please use this page only as a reference guide for parts and hardware.

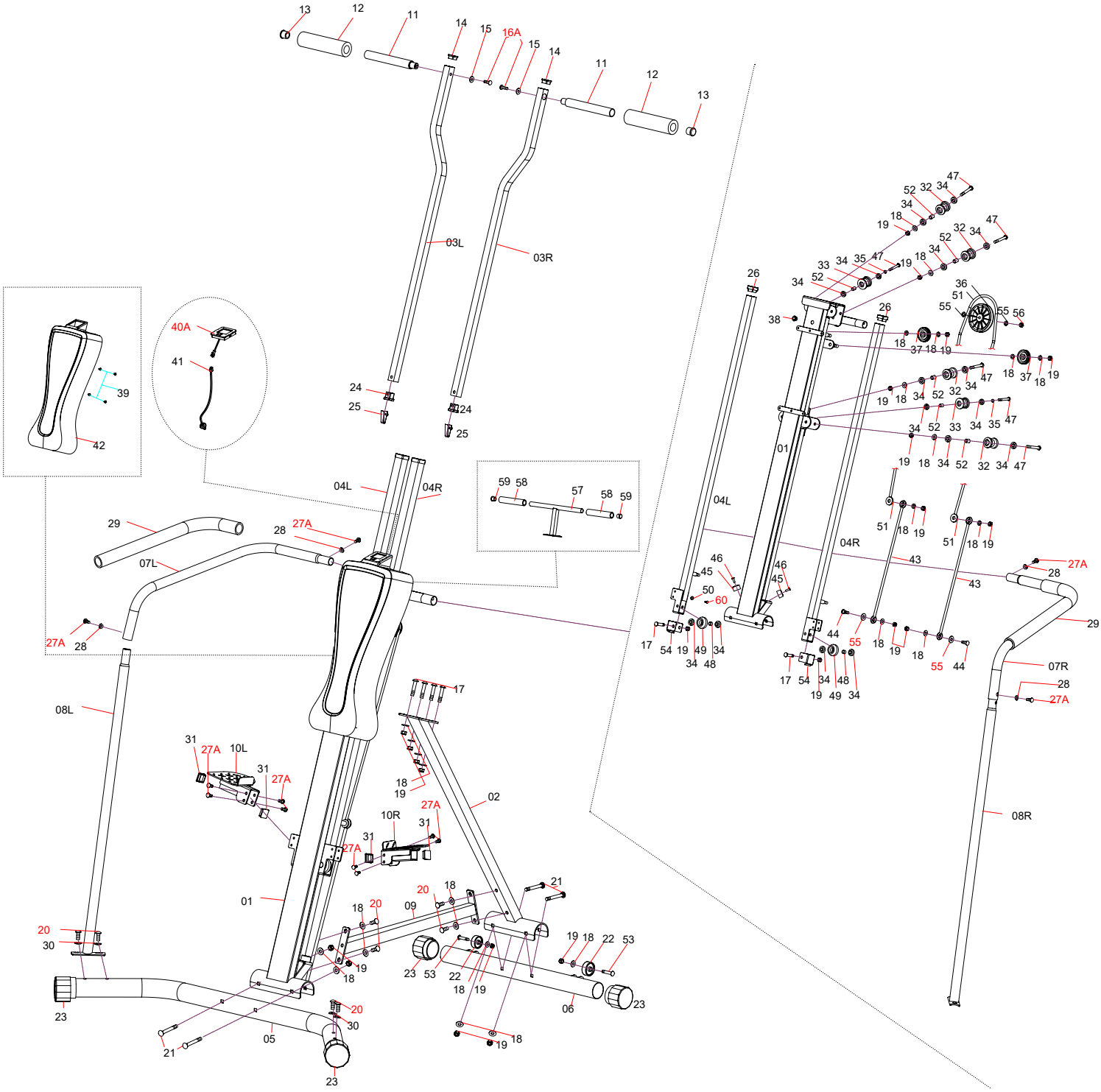

Hardware and Tool List

The following hardware is used to assemble your unit. Please take a moment to familiarize yourself with these items.
PLEASE NOTE : Most of these parts are already *pre-assembled* on your unit. Do not be alarmed if you see parts on this page that are not included in your hardware packet.

Bolt

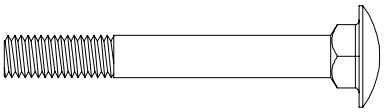

#21 Carriage Bolt (M8 x 67mm)
[4 pieces]

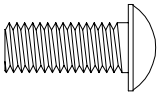

#20 Bolt (M8 x 20mm)
[8 pieces]

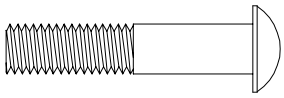

#17 Bolt (M8 x45mm)
[4 pieces]

#16A Bolt (M6 x 20mm)
[2 pieces]

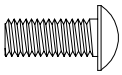

#27A Bolt (M6 x 15mm)
[12 pieces]

Washer

#18 Washer (M8)
[12 pieces]

#15 Washer (M6)
[2 pieces]

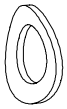

#30 Arc Washer (M8)
[4 pieces]

#28 Arc Washer (M6)
[4 pieces]

Nut

#19 Nylon Nut (M8)
[8 pieces]

Tools (Included)

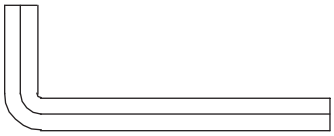

Tool 1 (S5)
[1 piece]

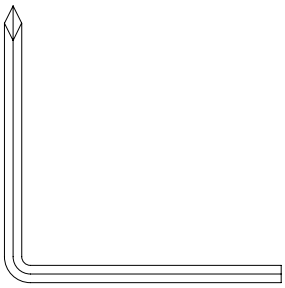

Tool 2 (S5)
[1 piece]

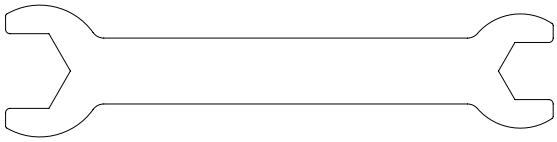

Tool 3 (S13-S17)
[1 piece]

Assembly STEP 1

NOTE BEFORE STARTING THE ASSEMBLY PROCESS :
To avoid misalignment due to over-tightening, please do not use a wrench and use only hand-tightening for now to ensure easy assembly.

Wrench-tightening should be performed after all parts are assembled to ensure all nuts, bolts, and parts are tightly secured before use.

With the help of an assistant, attach Support Tube **(#02)** and the Fixed Handlebar/Transport Handle **(#57)** to the Main Frame **(#01)**, then secure them together using four Bolts **(#17)**, four Washers **(#18)** and four Nylon Nuts **(#19)**.

Hardware Required

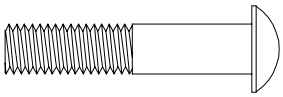

#17 Bolt (M8 x45mm) [4 pieces]

#18 Washer (M8)
[4 pieces]

#19 Nylon Nut (M8)
[4 pieces]

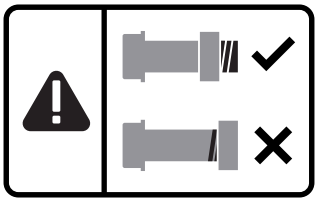

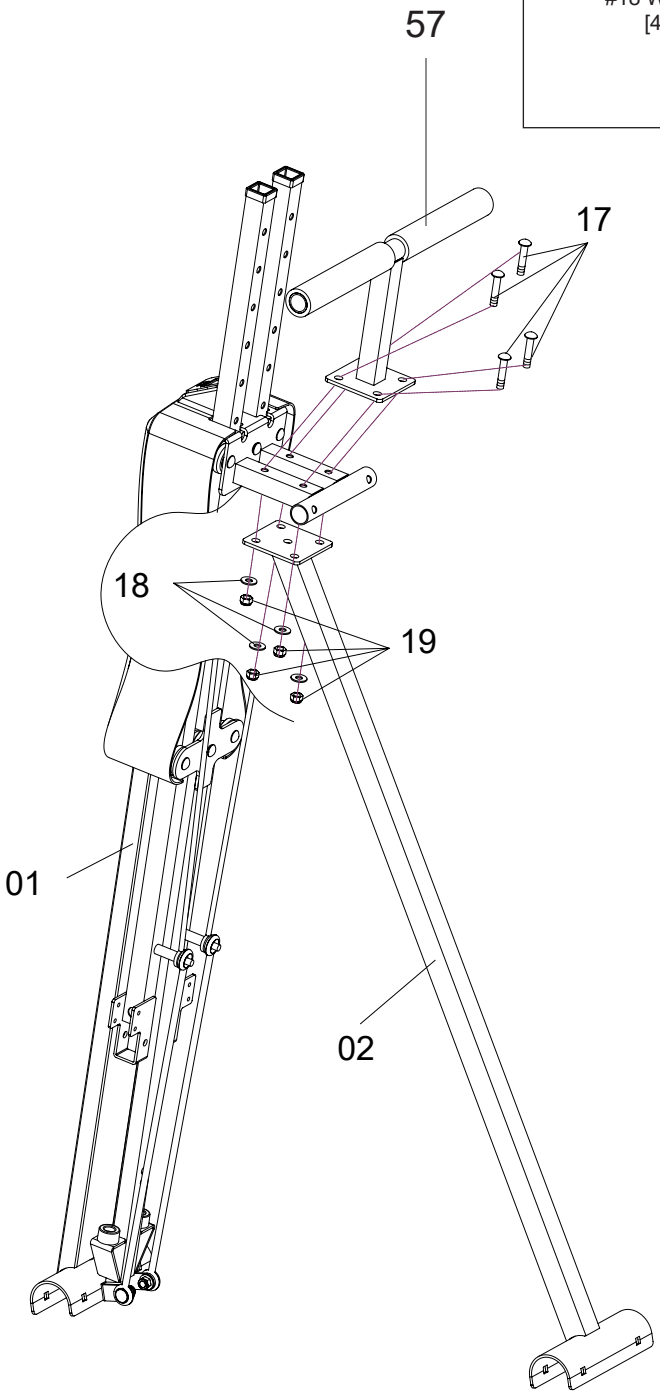

Assembly STEP 2

Attach Base Tube **(#09)** to the Main Frame **(#01)** and Support Tube **(#02)**, then secure them together using four Bolts **(#20)** and four Washers **(#18)**.

Hardware Required

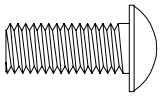

#20 Bolt (M8 x 20mm)
[4 pieces]

#18 Washer (M8)
[4 pieces]

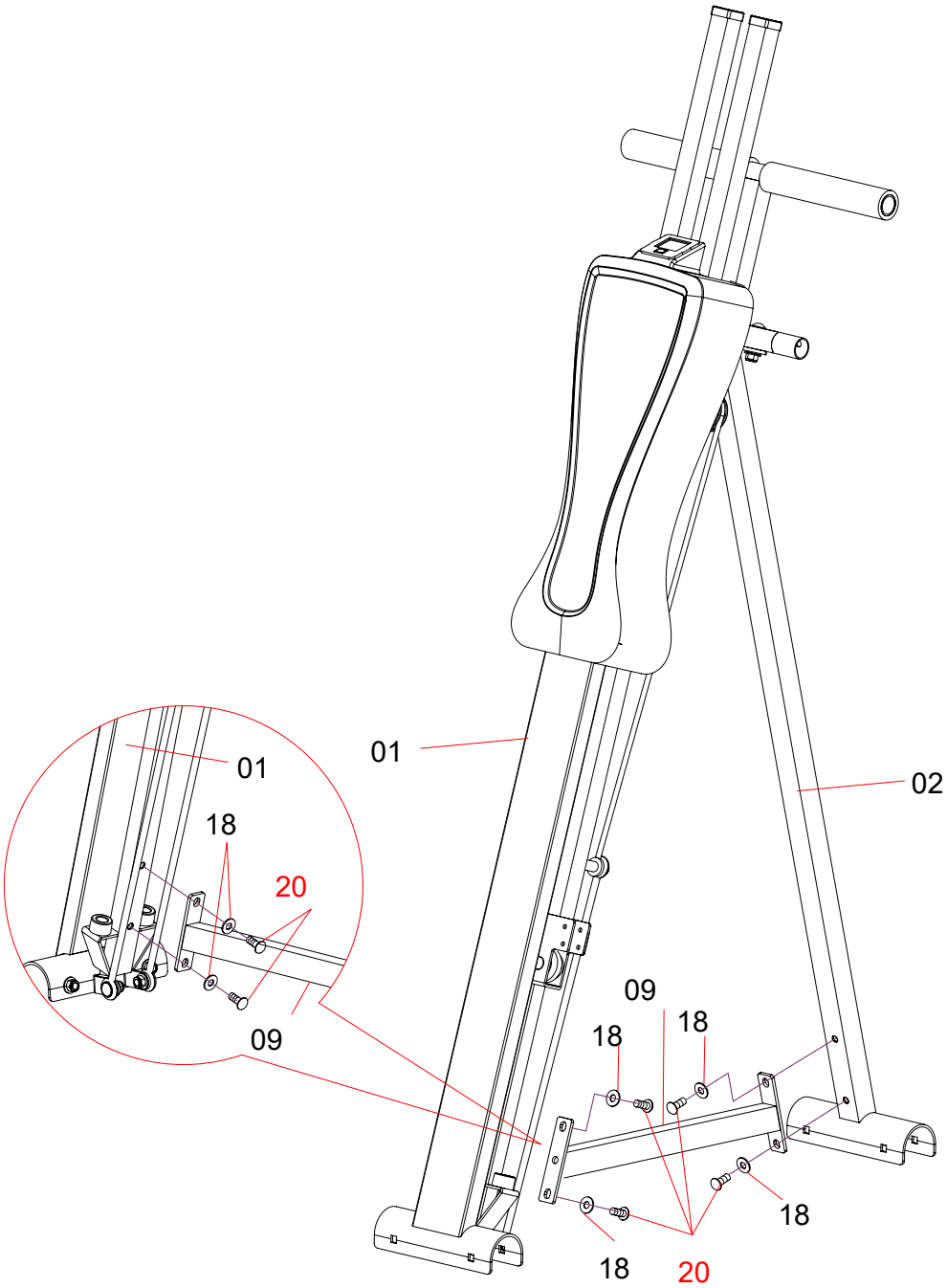

Assembly STEP 3

Attach the Front Stabilizer **(#06)** to the Support Tube **(#02)**, then secure them together by using two Carriage Bolts **(#21)**, two Washers **(#18)** and two Nylon Nuts **(#19)**.

Attach the Rear Stabilizer **(#05)** to the Main Frame **(#01)**, then secure them together by using two Carriage Bolts **(#21)**, two Washers **(#18)** and two Nylon Nuts **(#19)**.

Hardware Required

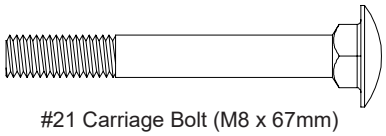

#21 Carriage Bolt (M8 x 67mm)
[4 pieces]

#18 Washer (M8)
[4 pieces]

#19 Nylon Nut (M8)
[4 pieces]

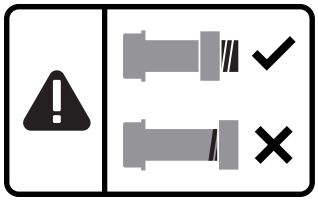

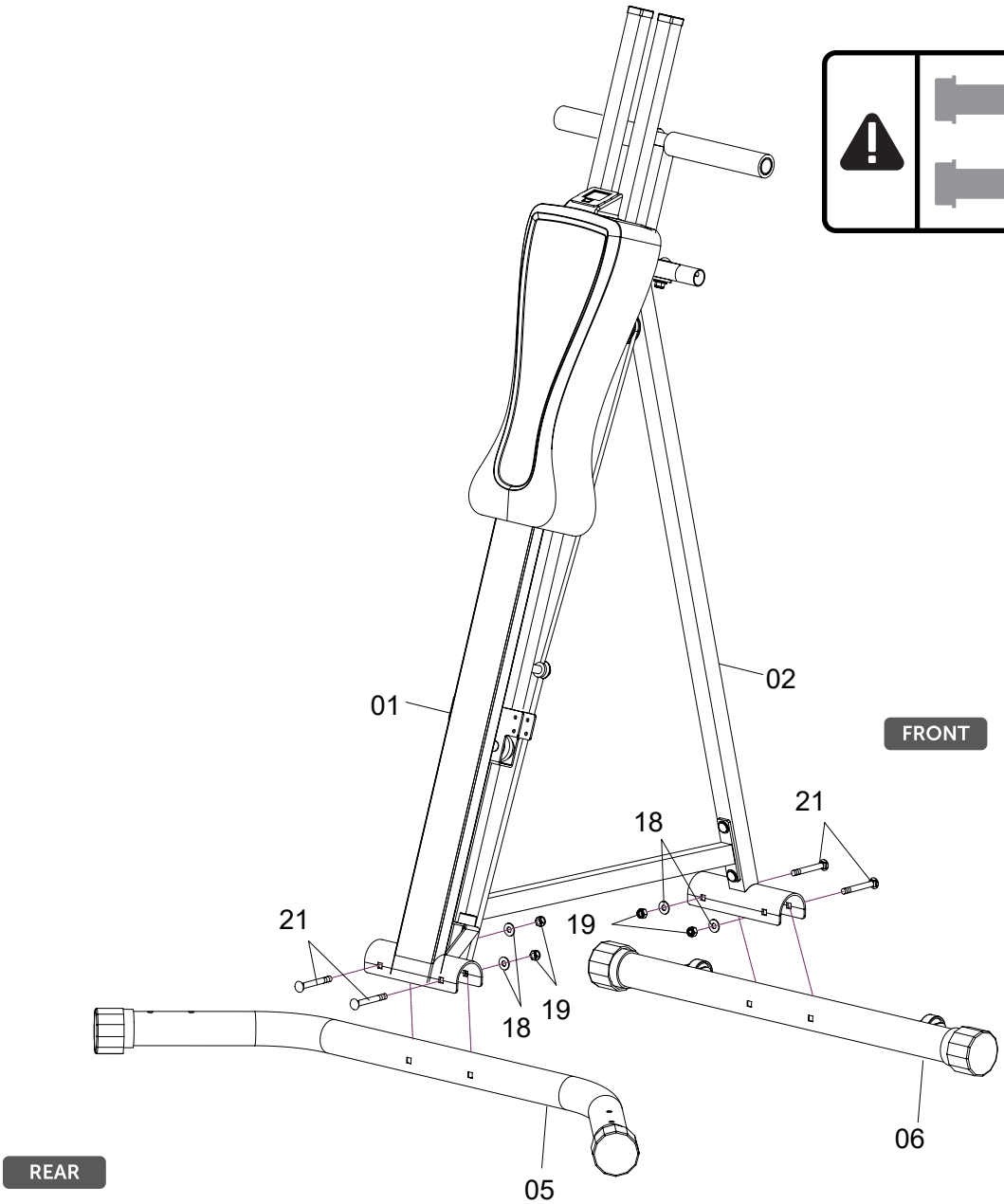

Assembly STEP 4

NOTE :
Please remove and discard all 6 pieces of protective caps that come pre-installed on the Handlebars prior to assembling them.

Insert Right Support Tube **(#08R)** into the Right Handle Bar **(#07R)**, secure them together by using one Bolt **(#27A)** and one Arc Washer **(#28)** by hand.

Attach Right Handle Bar **(#07R)** to the Main Frame **(#01)**, secure them together by using one Bolt **(#27A)** and one Arc Washer **(#28)** by hand.

Attach Right Support Tube **(#08R)** to the Rear Stabilizer **(#05)**, then secure them together by using two Bolts **(#20)** and two Arc Washers **(#30)** by hand.

Please tighten all the nuts and bolts by hand and then securely tighten then with tool after all frames are assembled.

Repeat this process on the left side using Left Handle Bar **(#07L)** and Left Support Tube **(#08L)**.

Hardware Required

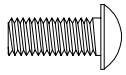

#27A Bolt (M6 x 15mm)
[4 pieces]

#28 Arc Washer (M6)
[4 pieces]

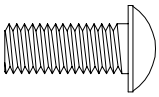

#20 Bolt (M8 x 20mm)
[4 pieces]

#30 Arc Washer (M8)
[4 pieces]

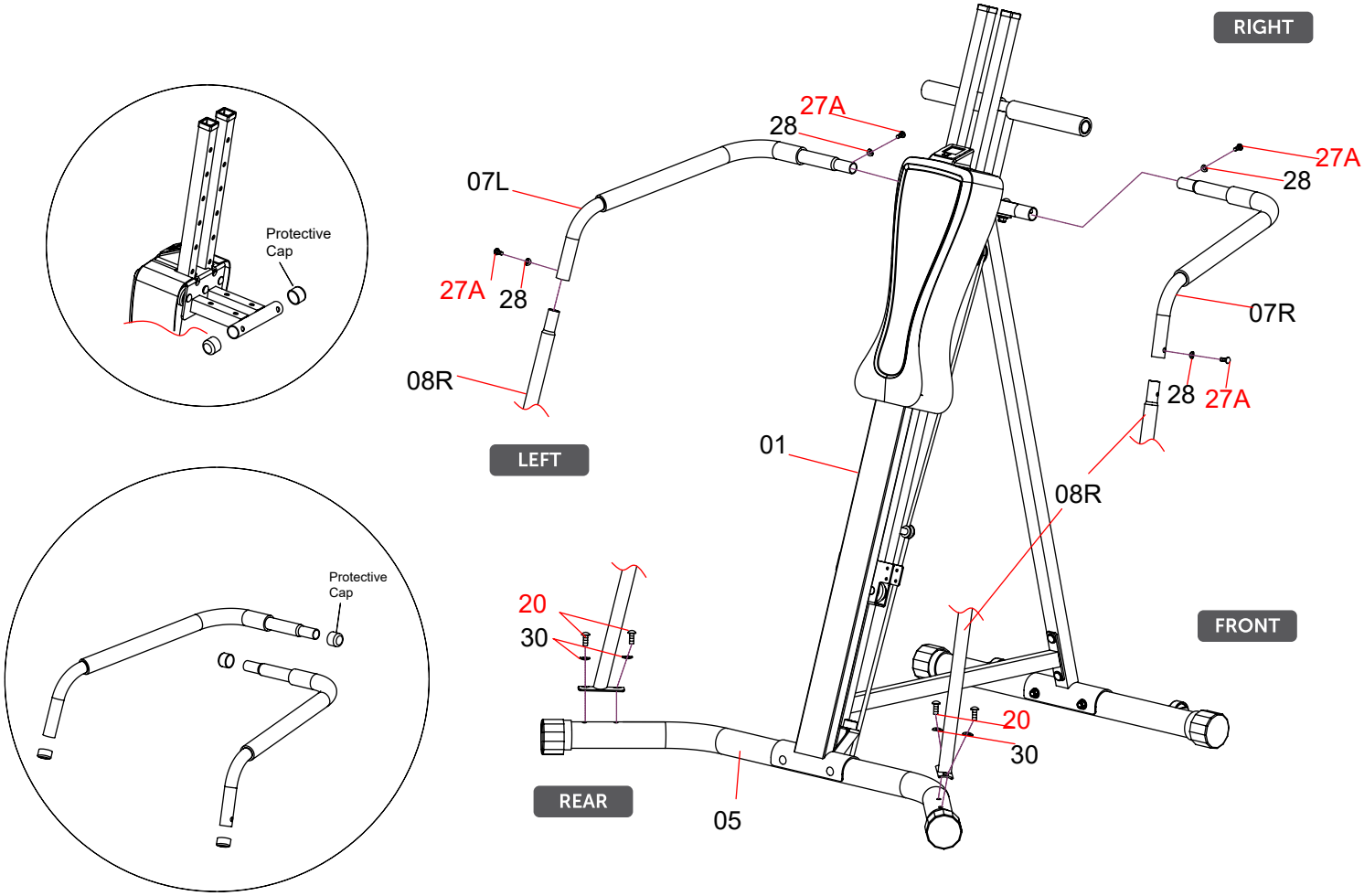

Assembly STEP 5

Attach the Right Pedal **(#10R)** to the Right Lower Slide Rail **(#04R)**, then secure them together by using four Bolts **(#27A)**.

Repeat this process on the left side using Left Pedal **(#10L)** and Left Lower Slide Rail **(#04L)**.

Hardware Required

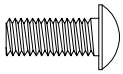

#27A Bolt (M6 x 15mm)
[8 pieces]

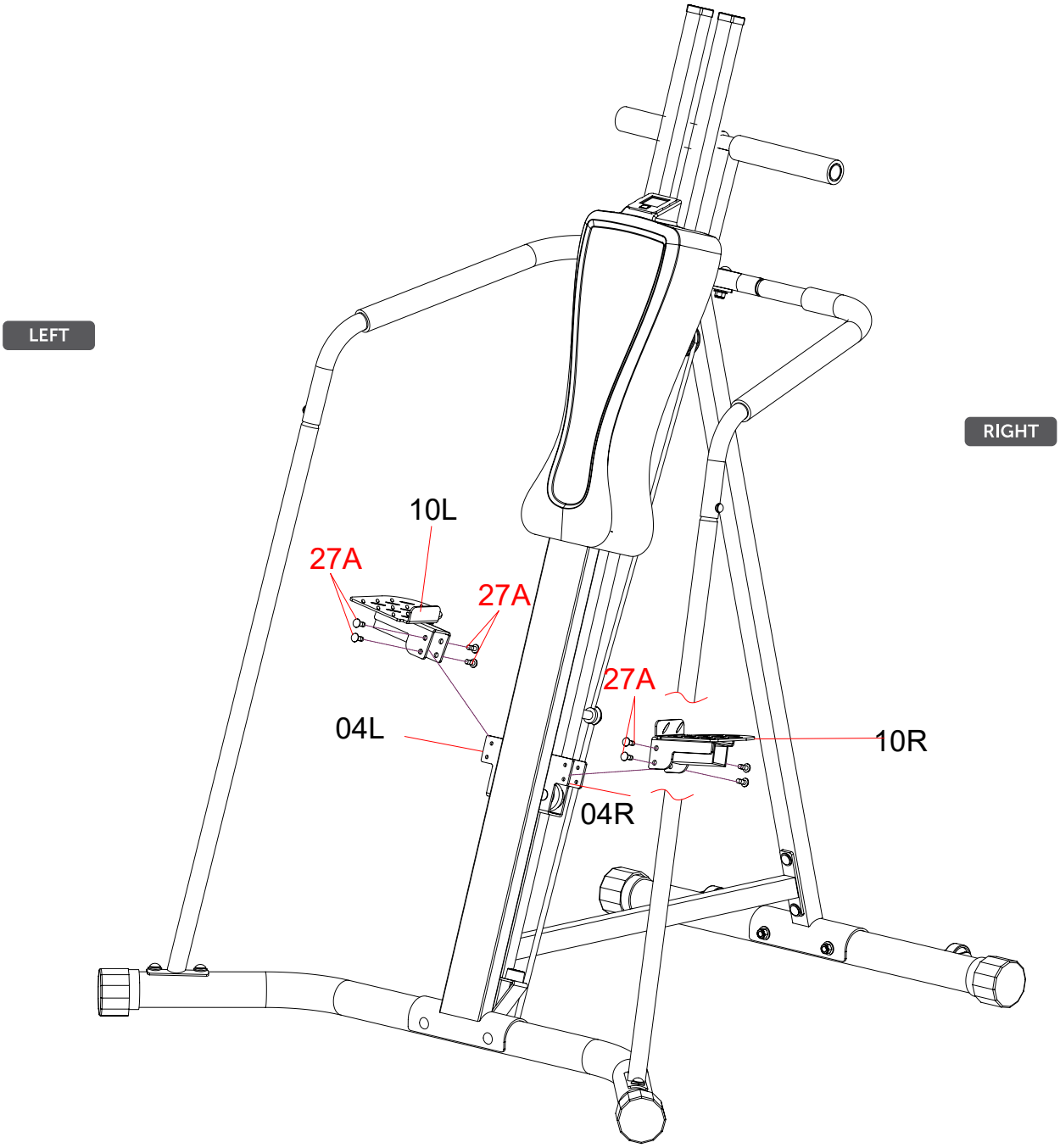

Assembly STEP 6

Attach Hand Grip **(#11)** to the Right Upper Slide Rail **(#03R)**, then secure them together by using one Bolt **(#16A)** and one Washer **(#15)**.

Repeat this process on the left side using Left Upper Slide Rail **(#03L)**.

Hardware Required

#16A Bolt (M6 x 20mm)
[2 pieces]

#15 Washer (M6)
[2 pieces]

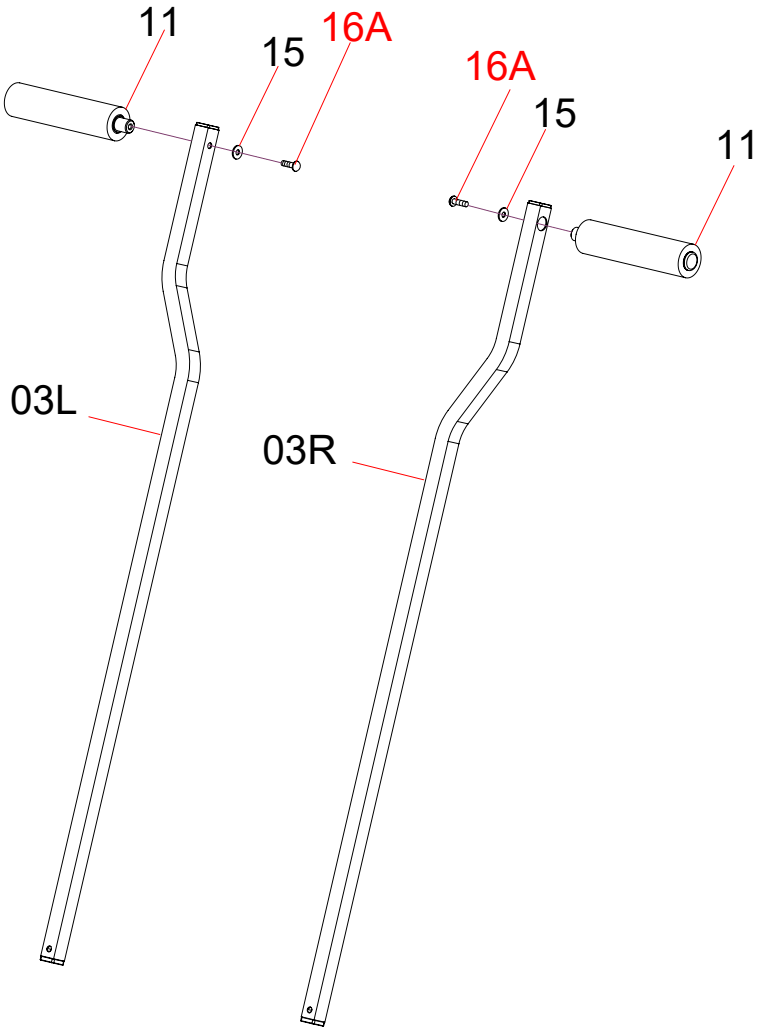

Assembly STEP 7

Insert Right Upper Slide Rails **(#03R)** into the Right Lower Slide Rails **(#04R)**. Insert Left Upper Slide Rails **(#03L)** into the Left Lower Slide Rails **(#04L)**.

Select a height setting that is comfortable to user by adjusting the Clips **(#25)**.

FOR YOUR SAFETY AND TO AVOID SERIOUS INJURY, ALWAYS ensure both handlebars are set at the same height.

Hardware Required

No hardware required

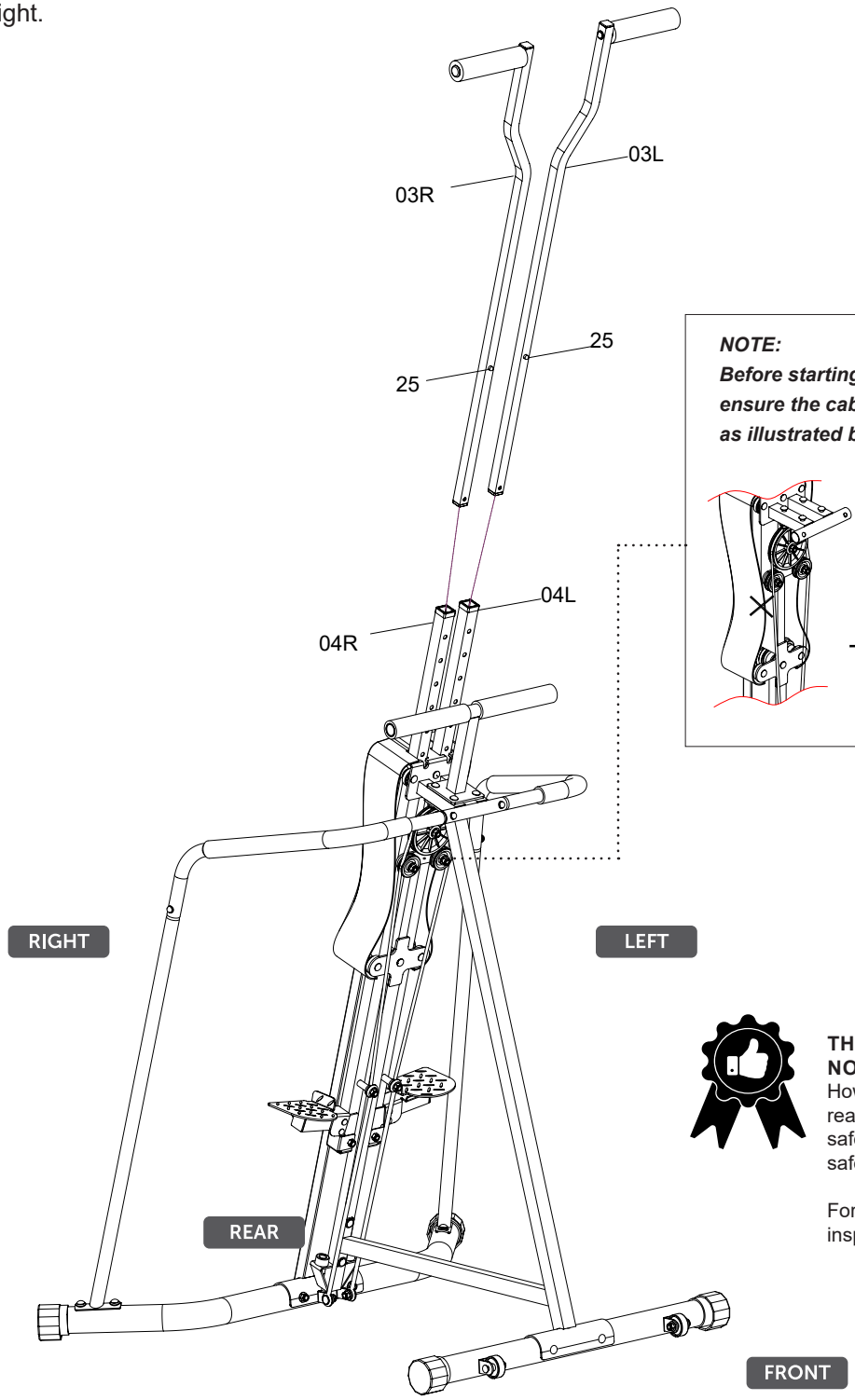

NOTE:
Before starting your workout, please always check and ensure the cable is positioned inside the pulley as illustrated below

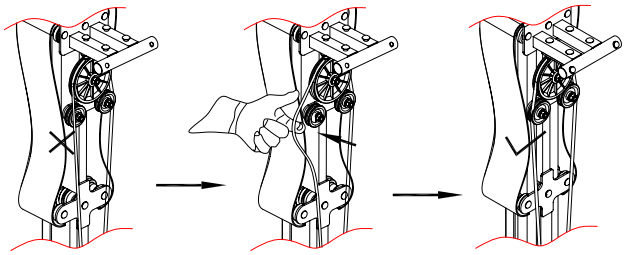

THE ASSEMBLY PROCESS IS NOW COMPLETE.
However, for your own safety, please make sure to read this entire Owner's Manual which includes safety instructions and warnings, as well as any safety/warning labels affixed to the product before use.

For your safety, please visually and functionally inspect and test the unit after assembly is complete.

Computer Operation

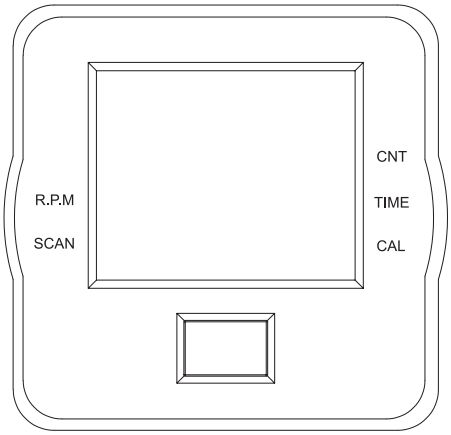

Specifications

FUNCTIONS		
	TIME	00:00 - 99:59 min:sec
	COUNT	0 - 9999 times
	CALORIES	0 - 9999 KCal
	REPS/MIN	0 - 9999 times/min
	BATTERY TYPE	LR44 (1)
	OPERATING TEMP	32°F - 104°F
	STORAGE TEMP	32°F - 160°F

MODE/SELECT : Hold the key for 4 seconds to have all function values reset (total reset), then select the function

FUNCTION

TIMER (TIME) : Time-keeping to record workout session.
COUNT (CNT) : Accumulate exercise steps during workout session.
CALORIES (CAL) : Total calories burned during workout session.
REPS/MIN (RPM) : Displays steps per minute during workout session.
SCAN : The monitor will then rotate displaying through the following functions: TIME - CAL - RPM

NOTE

1. If the display is faint or shows no figures ,please replace the batteries.
2. The monitor will automatically shut off if there is no signal received after 4 minutes .
3. The monitor will auto-power on when exercise and/or motion input is detected.
4. The monitor will automatically start calculating when you start to exercise and will stop calculating when you stop exercising for 4 seconds .

IMPORTANT NOTE :

Please remember that the functions in this computer are only meant to be tools to monitor your workout progress; they are not meant to provide medical information or be used for medical purposes. Please consult a physician before beginning any workout program.

HOW TO INSTALL AND REPLACE BATTERY

A. Slowly and carefully, use a flathead screwdriver to disengage the Monitor **(#40A)** from the Shroud **(#42)** so you can lift it up slightly (keeping all wires connected) for access to its underside.

B. Use the flathead screwdriver to gently remove the old battery and replace with one new LR44 battery, ensuring the +/- orientation is correct as shown in the illustration.

NOTE :

1. Only use LR44 battery for replacement.
2. Battery disposal should be handled according to all state and federal laws and regulations.
3. Do not dispose of batteries in fire.

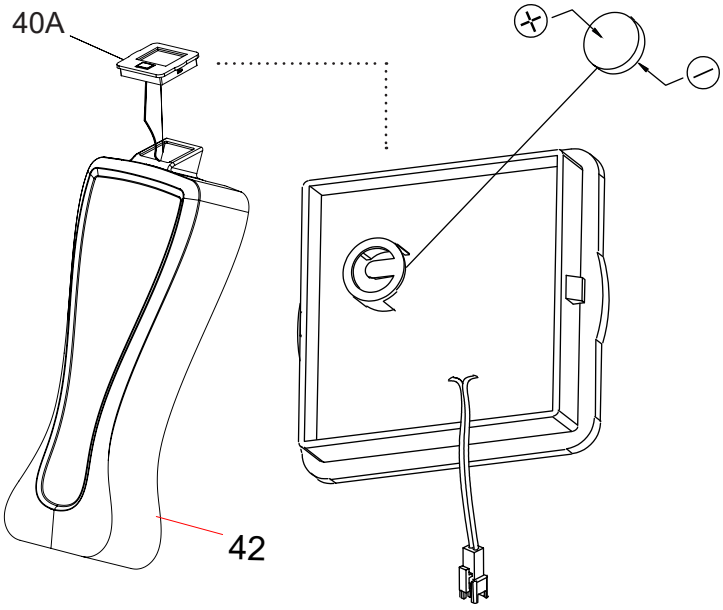

Safety and Maintenance

Safety & Warning

- Make sure all nuts, bolts, and screws are tightened prior to use.
- Be sure that all adjustment locking devices and safety devices are properly engaged prior to use!
- Never over-tighten the above-mentioned devices and parts to avoid damage to the unit.
- Check for loose parts and components and make proper adjustments prior to use.
- Check to see if there are any tears or bends in the welding or metal prior to use. If tears or bends are found, DO NOT use the unit and contact our CUSTOMER SUPPORT.
- Extreme care must be taken to not allow your feet, fingers, hair, clothing, and/or any loose items to be snagged into any portion of the bike when the unit is in motion. Failure to follow these instructions could result in serious injury, including the loss of fingers.
- Always wait for the pedals and other moving parts (which can gain great momentum during riding) to come to a complete stop before dismounting the unit to avoid serious injury.

How To (Emergency) Stop

NOTE : Always wait for the pedals and/or any other moving parts (which can gain great momentum during exercise) to come to a complete stop before dismounting the unit to avoid serious injury.

- To reduce speed on the vertical climber, you may use the combinations of your feet on theLeft/Right Pedal **(#10L/10R)** and your hands on both the Hand Grip **(#11)** or Left/Right Handlebar **(#07L/07R)** to slow down safely and safely apply counter-momentum.
- Wait for the pedals to come to a complete stop and find stability and support with the Left/Right Handlebar **(#07L/07R).**
- Now you may safely dismount the unit.

How To Move/Transport The Unit

NOTE :
To safely move, transport, and/or store the unit, please seek the help of capable assistants (minimum of 2 people).
The unit has integrated Transport Wheel **(#22)** and Fixed Handlebar/Transport Handle **(#57)** purposely intended to help ease this process.

- Position one person on each side at the front of the unit toward the Left/Right Handlebar **(#07L/07R)** (one person on the left, and one on the right).
- Have each person use both hands to grip the corresponding Left/Right Handlebar **(#07L/07R)** and Transport Handle **(#57)**. (These are the safest areas to avoid injury during this process.)
- Have both people simultaneously lift the rear end of the unit, leaning the weight and pressure into the front of the unit and onto the Transport Wheel **(#22)** to move/transport the unit to the desired area.

Maintenance & Care

- Please review all safety instructions and warnings in this entire Owner's Manual, as well as any safety/warning labels affixed to the product before use.
- Do not use solvent cleaners. If you are in any doubt, do not use your cleansing product; contact CUSTOMER SUPPORT.
- The specific parts on your unit which may see possible signs of wear after prolonged use are listed as follows (please check these parts before each use): Left/Right Handlebar **(#07L/07R)**; Hand Grip Foam **(#12)**; Bungee Cord **(#43)**; Cable **(#51)**.
- For any replacement warning labels, please contact our CUSTOMER SUPPORT at

  1 (888) 266-6789 or **1 (909) 598-9876**, or mail in a written request to:

  Body Flex Sports Inc.
  21717 Ferrero Parkway
  Walnut, CA 91789

  More detailed information about how to reach our CUSTOMER SUPPORT may be found on Page 2 of the Owner's Manual under the "CUSTOMER SUPPORT" section.

Troubleshooting

(AFTER COMPLETE ASSEMBLY)

Troubleshoot Area	Solution
Calories/RPM/ Time (Etc.)	If the computer is **not displaying the CALORIES/RPM/TIME/(ETC.) functions** (or you are getting inaccurate readings), please adjust the following: 1. Check to ensure all computer sensor wires are properly connected and are not damaged. 2. You may need to refer to installation/assembly directions for the sensor wires in this manual.
Computer Display	If the **computer display is blank & not displaying any data** (or does not appear to power on), please adjust the following: 1. Check to ensure all sensor wires are all properly connected and are not damaged. 2. Check to ensure the AC Adapter* or Batteries* are properly plugged in or fully charged. 3. Check your product manual to determine if your model uses either AC Adapter or batteries to power your unit.

NOTES (Regarding the Computer Monitor):
Warning: This device complies with Part 15 of the FCC Rules. Operation is subject to the following two conditions:
(1) This device may not cause harmful interference.
(2) This device must accept any interference received, including interference that may cause undesired operation.

Caution:
This equipment has been tested and found to comply with the limits for a Class B digital device, pursuant to part 15 of the FCC Rules.
These limits are designed to provide reasonable protection against harmful interference in a residential installation. This equipment generates, uses and can radiate radio frequency energy and, if not installed and used in accordance with the instructions, may cause harmful interferenceto radio communications. However, there is no guarantee that interference will not occur in a particular installation. If this equipment does cause harmful interference to radio or television reception, which can be determined by turning the equipment off and on, the user is encouraged to try to correct the interference by one or more of the following measures:
- Reorient or relocate the receiving antenna.
- Increase the separation between the equipment and receiver.
- Connect the equipment into an outlet on a circuit different from that to which the receiver is connected.
- Consult the dealer or an experienced radio/TV technician for help.

Warm-Up Instructions

Before use, you must read and understand all instructions & warnings stated in this Owner's Manual as well as posted on the equipment. Before beginning any exercise program including the following flexibility exercises, please consult with your physician.

The following flexibility exercises are provided to you as a means to prevent injury while you are exercising. A proper warm-up routine decreases the chance of injuring your muscles while you are exercising. Please take the time to do these flexibility exercises before and after each time you exercise.

Groin Stretch

1. Sit with your knees flexed and soles of feet together.
2. Hold your ankles and bend at your hips (keep your back straight) as you press your knees toward the floor with your elbows.

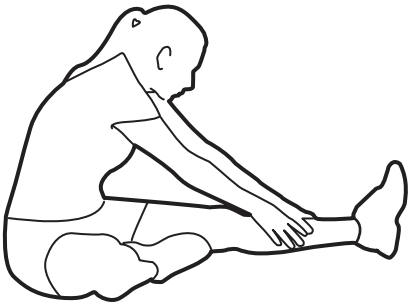

Hamstring Stretch

1. Sit with your left leg extended and bend your right leg at the knee as you place the sole of your right foot against the inner thigh of your extended leg.
2. Flex the foot of your extended leg (toes pointed toward ceiling) and gently bend forward from your hips; keep your back straight.
3. Reach your hands on your extended leg as far as possible and then switch legs and repeat.

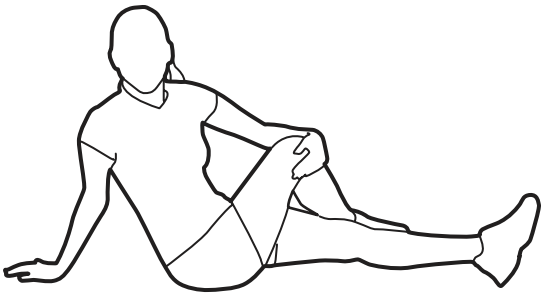

Trunk Twister

1. Sit with your leg extended and bend your right knee as you cross your right leg over your left leg. Your right foot of your extended leg foot should be flat on the floor alongside your left knee.
2. Place your left arm on the outside of your right leg and pull against that leg while twisting your trunk as far as possible to the right. Place your right hand on the floor behind your buttocks. Reverse leg positions and repeat.

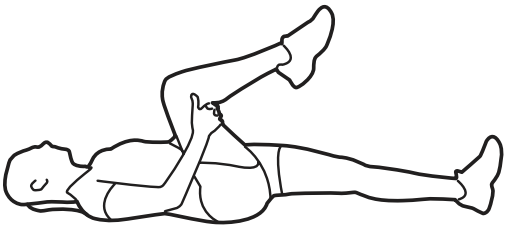

Groin Stretch

1. Lie on your back and raise your right leg as you clasp both hands under the back of the knee. Keep your left leg straight.
2. Gently pull your right leg toward your trunk without raising your upper body. Switch leg positions and repeat.

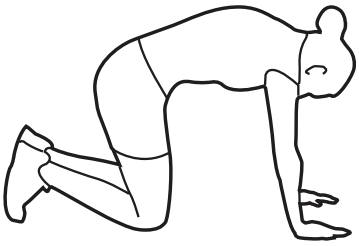

Trunk Flexion, Prone

1. Assume the depicted position on your hands and knees. Stretch your hands out in front of you and then slowly start to pull them back in toward your body as you tuck your chin and arch your back upward.
2. Return to the starting position slowly.

Warm-Up Instructions

Shoulder Stretch

1. Bring your right hand over your right shoulder to the upper back and bring your left hand under your left shoulder to the upper back.

2. Try to reach your fingertips. If you are not able to reach your fingertips, use a towel as an extension of your hands and gently pull one hand toward the other.
   Reverse arm positions and

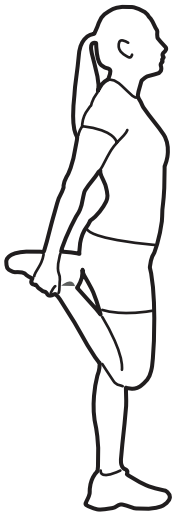

Quadriceps Stretch

1. Stand on your left leg and hold onto a support with your left hand.

2. Flex your right leg behind you, grasp your ankle or foot with your right hand and pull your foot toward your buttocks. Keep your back straight and right knee pointed down.
   Repeat on the other leg.

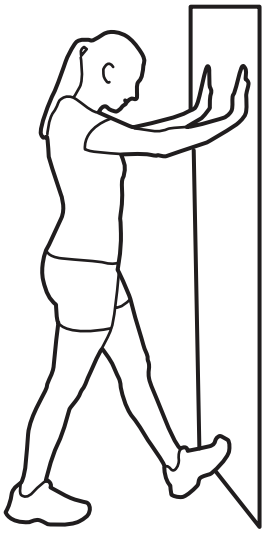

Calf Twister

1. Place both hands against a wall to aid your balance. Press the ball of your left foot against the wall and keep the heel of the same foot rested on the floor (make sure your left knee is bent).

2. Slowly start to straighten your left knee and you will feel the muscles in your left calf stretch. Switch leg positions and repeat.

THANK YOU FOR YOUR PURCHASE

MODEL NO.: BCR1000 BCR890

Please fill in the information below and keep this manual along with your sales receipt as proof of purchase.

Serial Number :

_____

Date of Purchase :

_____

Retailer :

_____

Body Flex Sports Inc.
21717 Ferrero Parkway
Walnut, CA 91789

Phone : 1 (888) 266-6789
Fax : 1 (909) 598-6707
Email : info@bodyflexsports.com

Ver. 06/29/2017 Printed in China