SOLID™

CONSTRUCTION

Foundation Drilling

KENNAMETAL®

Foundation Drilling

At Kennametal, our commitment to your most demanding foundation drilling applications is unparalleled. We have a long history of helping you achieve success and a tradition of exceeding your expectations.

We remain focused on redefining and advancing the earthworks industries through our world-class solutions — delivered by professionals who are committed to the health and profitability of your enterprise.

MISSION Kennametal delivers productivity to customers seeking peak performance in demanding environments by providing innovative custom and standard wear-resistant solutions, enabled through our advanced materials sciences, application knowledge, and commitment to a sustainable environment.

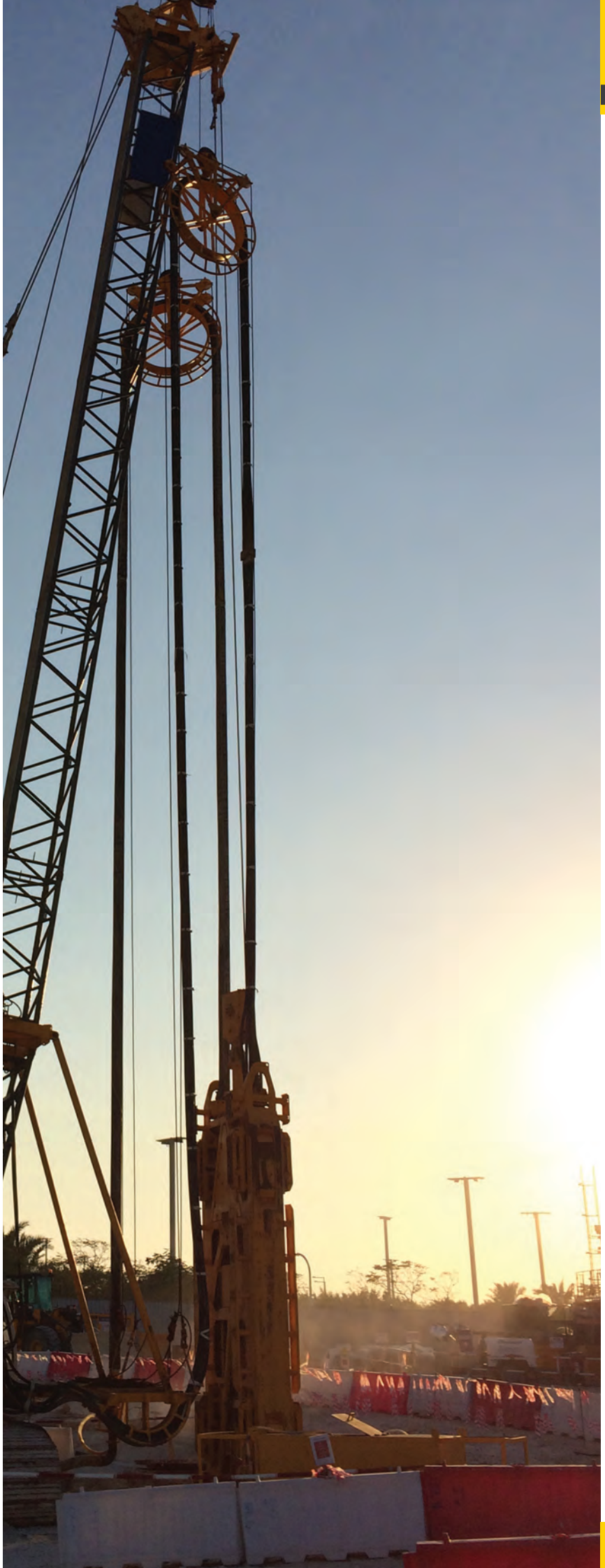

Table of Contents

Foundation Drilling Overview.....2–7

38/30mm Systems 8–17

25mm Systems 18–25

22mm Systems 26–37

20mm Systems 38–49

19mm Systems 50–57

11mm–14mm Systems 58–67

KF Systems 68–83

Wear Solutions 84–85

Index by Order Number.....86

Index by Catalogue Number.....87

SOLID™

The foundation for a successful drilling operation is built on rock-steady reliability and progress. Kennametal, the world's leading tooling and services provider, proudly introduces SOLID, our solution-focused platform that yields new levels of performance and productivity. SOLID-engineered tools deliver in the most challenging conditions. For unmatched quality, value, innovation, and application expertise, make Kennametal your SOLID choice.

To maximise productivity and reduce maintenance costs, consider the following for proper tool selection:

1. Material to be cut and geotechnical properties of the ground.

Attachment Types	Foundation Drilling Attachment	Conical Systems							
		CM Series		R, S, & C Series		SM, SL, & SD Series	FD Series	DS Series	
		11–13mm	14mm	19mm	20mm	22mm	25mm	38/30mm	
		Pages 60–65		Pages 52–56	Pages 40–45	Pages 28–33	Pages 21–22	Pages 10–13	
Auger • Soil auger • Rock auger • Tapered auger • Continuous Flight Auger (CFA) • Full Displacement Piles (FDP)		•	•	•	•	•	•	•	
Core Barrel • Cross core barrel • Centrifugal core barrel • Special core barrel				•	•		•		
Bucket • Soil bucket • Rock bucket • Drilling bucket • Cleaning bucket	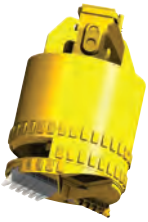			•	•	•	•		
Casing • Ring bit • Casing shoe	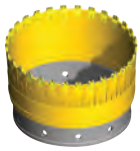								
Wall Cutter • Diaphragm wall cutter • Hydromill trench cutter • Slurry wall cutter • Cutter Soil Mixing (CSM)	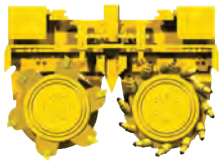						•	•	

2. Machine capacity (HP/KW, machine weight, and maximum torque) and cutting parameters (cutting depth, cutting width, and maximum diameter).

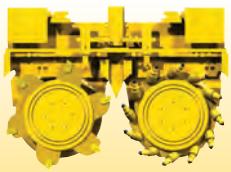

3. Effect of tooling and machine wear and tear.

● first choice
○ alternate choice

	KF Systems						
	KF Series						
					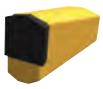		
	Quick-Change Systems	Wall Cutter Tools	Flat Teeth	Welding Bar	Welding Teeth	Welding Bit	Pilot Drill Systems
	Pages 69–83						
			●				●
	●			●	●	●	
			●				●
	●			●	●	●	
		●					

Troubleshooting

- The following chart shows typical end-of-life conditions and possible solutions to improve tool life. Please contact your Kennametal Sales Representative with specific questions.

Problem	Possible Cause	Recommended Solution
Carbide Fracture	• Hard cutting conditions. • Extreme impact.	• Contact your Kennametal Sales Representative for a full evaluation.
Thermal Cracking	• Hard cutting conditions. • Lack of penetration. • Grinding of material not conveyed. • Excessive heat generation during cutting.	• Contact your Kennametal Sales Representative for a full evaluation.
Excessive Carbide Wear	• Very abrasive cutting conditions. • High rotation speed. • Cutting too deep.	• Adjust rotation and feed of machine.
Steel Wash	• Grinding of material not conveyed. • Abrasive cutting conditions.	• Contact your Kennametal Sales Representative for a full evaluation. • Narrow bottom tip, X-series, hardfacing. • Increase feed.
One-Sided Steel/ Wear on Gage	• Conical not rotating. • Misaligned blocks. • Sticky cutting conditions. • Worn blocks. • Excess material build-up on tool.	• Clean the conical for foreign particles. • Tap the conical. • Contact your Kennametal Sales Representative for a full evaluation.
Shank Breakage	• Worn block bore. • Worn-out sleeve. • Hard cutting conditions. • Blunt/missing cutting tip.	• Contact your Kennametal Sales Representative for a full evaluation.

(continued)

(Troubleshooting — continued)

Problem	Possible Cause	Recommended Solution
Shank Bending	• Worn block bore. • Worn-out sleeve. • Hard cutting conditions. • Blunt/missing cutting tip.	• Contact your Kennametal Sales Representative for a full evaluation.
Broken Hub/Hub Failure	• Worn-out block: lateral play.	• Contact your Kennametal Sales Representative for a full evaluation.
Retainer Failure	• Worn-out block: lateral play.	• Contact your Kennametal Sales Representative for a full evaluation.
Sleeve Breakage	• Hard cutting conditions. • Worn-out sleeves.	• Contact your Kennametal Sales Representative for a full evaluation.

Product Icons

	X Treatment		HF Treatment		Tool with Puller Groove
	Retainer: External		Retainer: Internal		High Productivity

Cutting Condition Icons

Icons	Cutting Conditions	Description	Rock Compressive Strength Range (MPa)	Other Possible Characteristics	Rock Type Examples
	Soil	Granular Cohesion, Granular Cohesionless Soil Depends upon Percentage of Silt and Clay	—	No Plasticity/ Plasticity	Sand, Gravel, Clay, and Silt
	Light	Very Soft to Soft, Poorly Compacted, Highly Weathered, Unstratified Rock	0–35	Low Density	Soapstone, Shale, Lignite
	Medium	Soft to Medium-Hard, Weakly Compacted, Moderately Weathered, Medium Bedded Rock	20–60		Limestone, Caliche, Bauxite, Anthracite, Marl (Mudstone)
	Heavy	Medium-Hard to Hard, Moderately Compacted, Slightly Weathered, Medium-Thickly Bedded Rock	50–100		Dolomite, Limestone
	Severe	Very Hard, Well Compacted, Slightly Weathered, Thickly Bedded Rock	≥80	High Density	Granite, Basalt, Iron Ore (Hematite, Magnetite)
	Abrasive	Generally High Mohs Index Scale, High Wear Condition	—	Contains Feldspar, Quartz	Sandstone

Accessories Selector

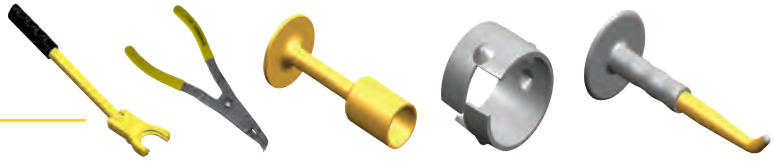

	Retainers			Installation/Removal Tools				
				Installation Tools		Removal Tools		
Systems	Retainer Type (Internal Retainer / External Retainer)	Catalogue Number	Order Number	Catalogue Number	Order Number	Catalogue Number	Order Number	Page(s)
38/30mm		DSLR 1070 RETAINER CLIP	4131992	DS-59 HAMMER	6153849	DS PULLER	3882341	16
		DSLR 1070 RETAINER CLIP	4131992	DS-59 HAMMER	6153849	K150 PAD COATED PULLER	3043352	
		DSLR 1070 RETAINER CLIP	4131992	DS-59 HAMMER	6153849	KHP2 KMTL PUNCH	1012247	
		KR-112 BE RETAINER	4055765	KRP4 PLIER	1012047	KRP4 PLIER	1012047	
25mm		U40 RETAINER	1011973	–	–	C30HP/U40HP BIT PULLER ASSEM	1011982	24
		U40 RETAINER	1011973	–	–	U70 PAD COATED PULLER	3043394	
		U40 RETAINER	1011973	–	–	KHP2 KMTL PUNCH	1012247	
22mm		LR87 RETAINER	1011935	–	–	C123/U50 HAMMER PULLER	1012016	36, 48
22mm		LR87 RETAINER	1011935	–	–	KHP2 KMTL PUNCH	1012247	36
		SLR RETAINING RING	1817888	C21R REMOVER TOOL W/ GRIP	1012348	C21R REMOVER TOOL W/ GRIP	1012348	
20mm		C10 RETAINER	1011965	–	–	C123/U50 HAMMER PULLER	1012016	36, 48
		LR76 RETAINER	1011942	–	–	C123/U50 HAMMER PULLER	1012016	
		C3R RETAINER	1012120	C21R REMOVER TOOL W/ GRIP	1012348	C21R REMOVER TOOL W/ GRIP	1012348	
19mm		U43K	1011978	–	–	C20/U43HP BIT PULLER ASSEM	1011984	36, 57
		C21R RETAINER	1011961	C21R REMOVER TOOL W/ GRIP	1012348	C21R REMOVER TOOL W/ GRIP	1012348	

38/30mm Systems

Foundation Drilling Attachments: Wall Cutter, Bucket, and Auger

Kennametal designs cutting systems that provide both productivity and protection. By selecting the right tool at the onset of the job, we help you meet production goals and also protect your machinery from costly downtime. The cutting wheels of the **hydromill trench cutter** cut material and the slurry pump helps extract cut material. The right tool selection helps produce right-sized cut material (spoil), making it easier to process with.

Wall Cutter

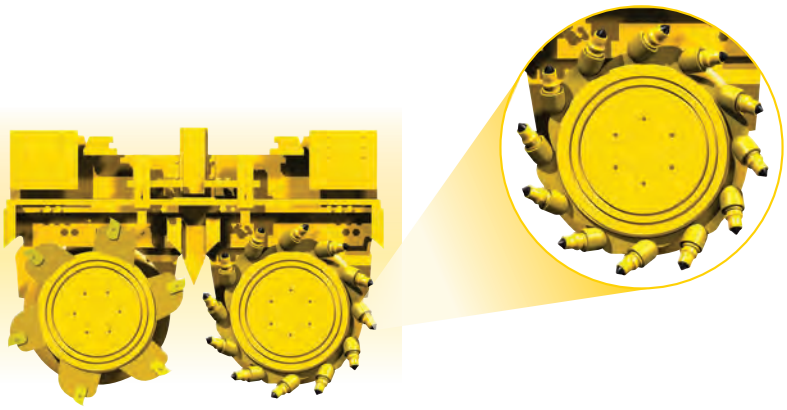

Bucket

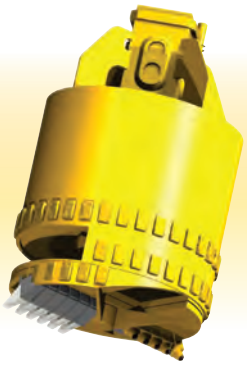

Auger

DSDR-X Series

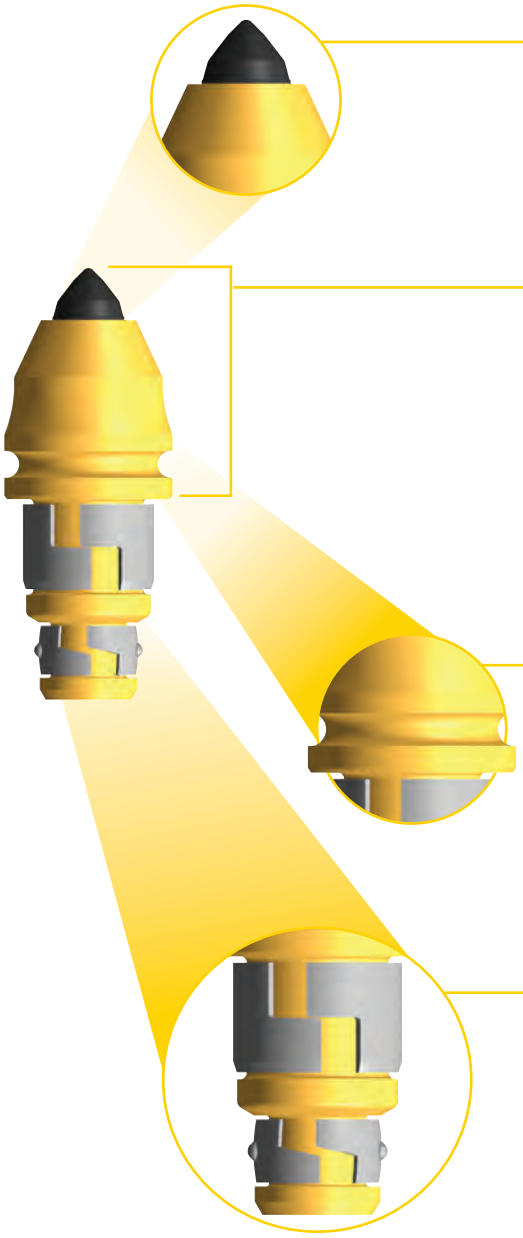

Narrow Bottom Carbide Tip

- Provides maximum combination of strength and wear resistance.

X Series

- Provides exceptionally durable bodies due to our proprietary hardness (throughout the entire head) for better wear protection.

Body

- Hardened steel alloy body for maximum strength. Four tools are available in standard 2.75" gage length.

Puller Groove

- Provides easier extraction of the tools.

Flanged Collar

- Provides block face protection and helps prevent shank breakage.

Dual Retainers

- Provide additional holding power in worn blocks while maintaining rotation.

Block Systems

- Two unique designs for your application need.

DS-59 HAMMER

- Easy installation tool for DS-59 Series conicals.
- Safe and fast tool replacement.
- Reduces downtime.

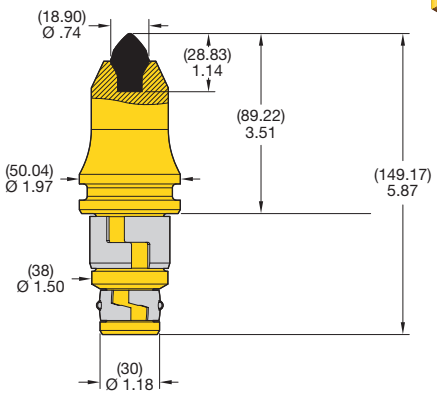

DS102DR X

order number	catalogue number	block	retainer	retainer
5380221	DS102DR X	C4/U43	DSLR 1070 RETAINER CLIP	U75K

NOTE: Conical includes retainer.
Block and additional retainers sold separately.

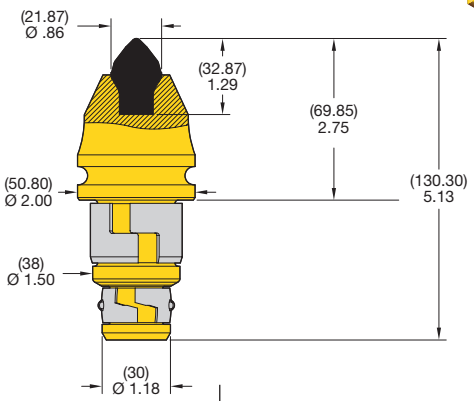

DS105DR X

order number	catalogue number	block	retainer	retainer
5598260	DS105DR X	C4/U43	DSLR 1070 RETAINER CLIP	U75K

NOTE: Conical includes retainer.
Block and additional retainers sold separately.

Packaging Information

order number	catalogue number	pieces per container	container weight (approximate) kg	container weight (approximate) lbs	pieces per pallet	pallet weight (approximate) kg	pallet weight (approximate) lbs
5380221	DS102DR X	10	12.3	27.2	500	616.9	1415
5598260	DS105DR X	12	13.5	29.8	600	674.9	1488

Dimensions shown in (millimetres) and inches.

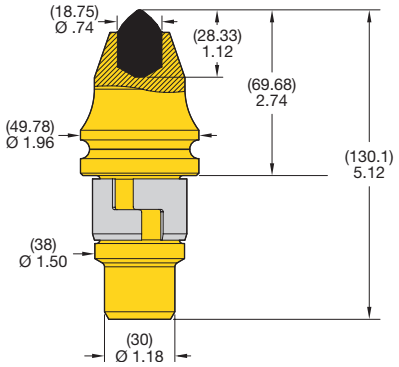

DS01

order number	catalogue number	block	retainer
1880696	DS01	C4/U43	DSLR 1070 RETAINER CLIP

NOTE: Conical includes retainer.
Block and additional retainers sold separately.

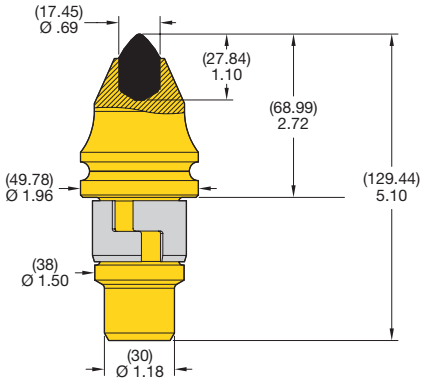

DS04

order number	catalogue number	block	retainer
1918736	DS04	C4/U43	DSLR 1070 RETAINER CLIP

NOTE: Conical includes retainer.
Block and additional retainers sold separately.

Packaging Information

order number	catalogue number	pieces per container	container weight (approximate) kg	container weight (approximate) lbs	pieces per pallet	pallet weight (approximate) kg	pallet weight (approximate) lbs
1880696	DS01	12	13.2	29.0	600	658.6	1505
1918736	DS04	12	12.7	28.1	600	636.8	1465

Dimensions shown in (millimetres) and inches.

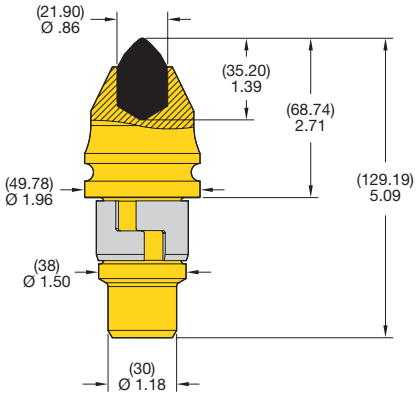

DS05 X

order number	catalogue number	block	retainer
1918738	**DS05 X**	**C4B**	**DSLR 1070 RETAINER CLIP**

NOTE: Improved DS05 conical.
Conical includes retainer.
Block and additional retainers sold separately.

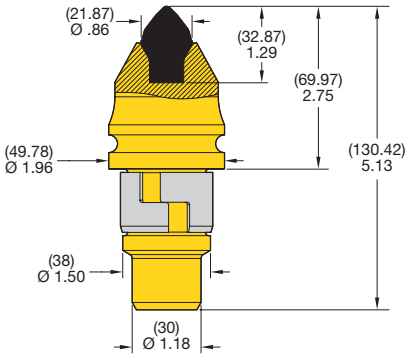

DS05NB X

order number	catalogue number	block	retainer
4161113	**DS05NB X**	**C4B**	**DSLR 1070 RETAINER CLIP**

NOTE: Conical includes retainer.
Block and additional retainers sold separately.

Packaging Information

order number	catalogue number	pieces per container	container weight (approximate) kg	container weight (approximate) lbs	pieces per pallet	pallet weight (approximate) kg	pallet weight (approximate) lbs
1918738	**DS05 X**	12	13.6	29.9	600	677.7	1550
4161113	**DS05NB X**	12	13.6	30.0	600	680.4	1500

Dimensions shown in (millimetres) and inches.

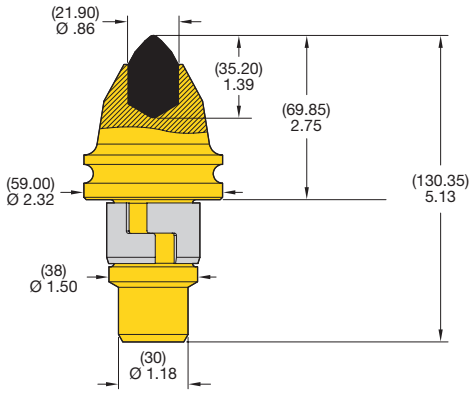

DS05-59 X

order number	catalogue number	block	retainer
2878292	DS05-59 X	C4B	DSLR 1070 RETAINER CLIP

NOTE: Conical includes retainer.
Block and additional retainers sold separately.

Packaging Information

order number	catalogue number	pieces per container	container weight (approximate) kg	container weight (approximate) lbs	pieces per pallet	pallet weight (approximate) kg	pallet weight (approximate) lbs
2878292	DS05-59 X	12	15.8	34.9	600	790	1745

Dimensions shown in (millimetres) and inches.

C4

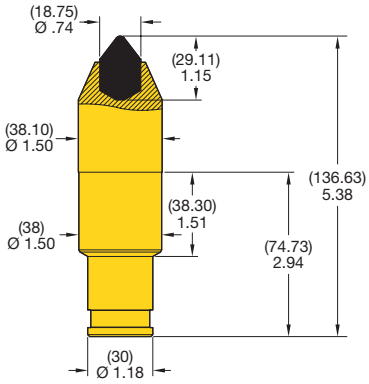

order number	catalogue number	block	retainer
1010761	**C4**	**C4B**	**KR-112 BE RETAINER**

NOTE: Conical includes retainer.
Block and additional retainers sold separately.

C4 1

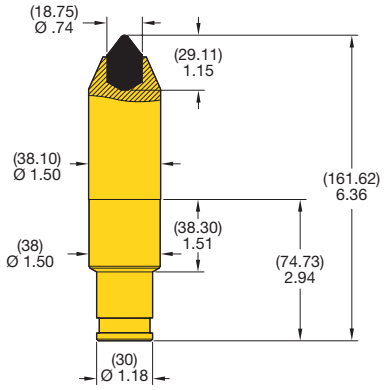

order number	catalogue number	block	retainer
1010776	**C4 1**	**C4B**	**KR-112 BE RETAINER**

NOTE: Conical includes retainer.
Block and additional retainers sold separately.

Packaging Information

order number	catalogue number	pieces per container	container weight (approximate) kg	container weight (approximate) lbs	pieces per pallet	pallet weight (approximate) kg	pallet weight (approximate) lbs
1010761	**C4**	15	14.6	32.1	750	728.0	1675
1010776	**C4 1**	15	17.9	39.5	750	894.7	1973

Dimensions shown in (millimetres) and inches.

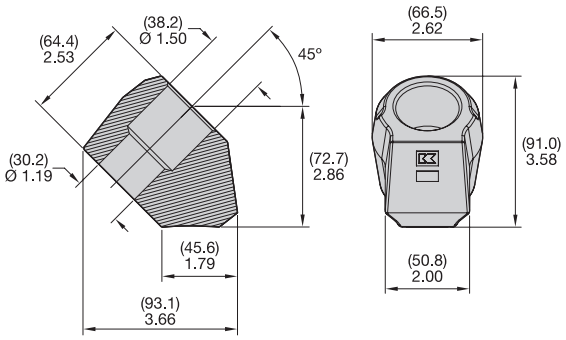

C4B

order number	catalogue number
1011578	**C4B**

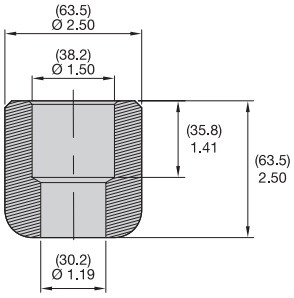

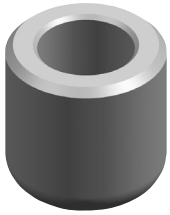

DS3830H

order number	catalogue number
5601762	**DS3830H**

Packaging Information

order number	catalogue number	pieces per container	container weight (approximate) kg	container weight (approximate) lbs	pieces per pallet	pallet weight (approximate) kg	pallet weight (approximate) lbs
1011578	**C4B**	8	12.9	28.4	400	644.3	1490
5601762	**DS3830H**	10	10.6	23.3	500	528.4	1235

Dimensions shown in (millimetres) and inches.

DS PULLER

order number	catalogue number
3882341	DS PULLER

DS-59 HAMMER

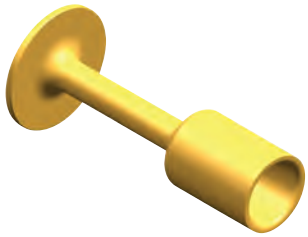

order number	catalogue number
6153849	DS-59 HAMMER

K150 PAD COATED PULLER

order number	catalogue number
3043352	K150 PAD COATED PULLER

KHP2 KMTL PUNCH

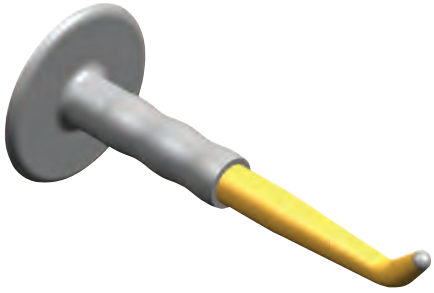

order number	catalogue number
1012247	KHP2 KMTL PUNCH

KR-112 BE RETAINER

order number	catalogue number
4055765	KR-112 BE RETAINER

KRP4 PLIER

- Used on external snap rings.
- Heavy duty.

order number	catalogue number
1012047	KRP4 PLIER

KENNAMETAL

25mm Systems

Foundation Drilling Attachments: Auger, Bucket, and Core Barrel

Kennametal cutting systems can be used in a wide range of foundation drilling attachments and geotechnical conditions. When drilling with an **auger** in soil or rock cutting conditions, Kennametal offers a wide range of products that maximise productivity, minimise wear, and boost overall performance.

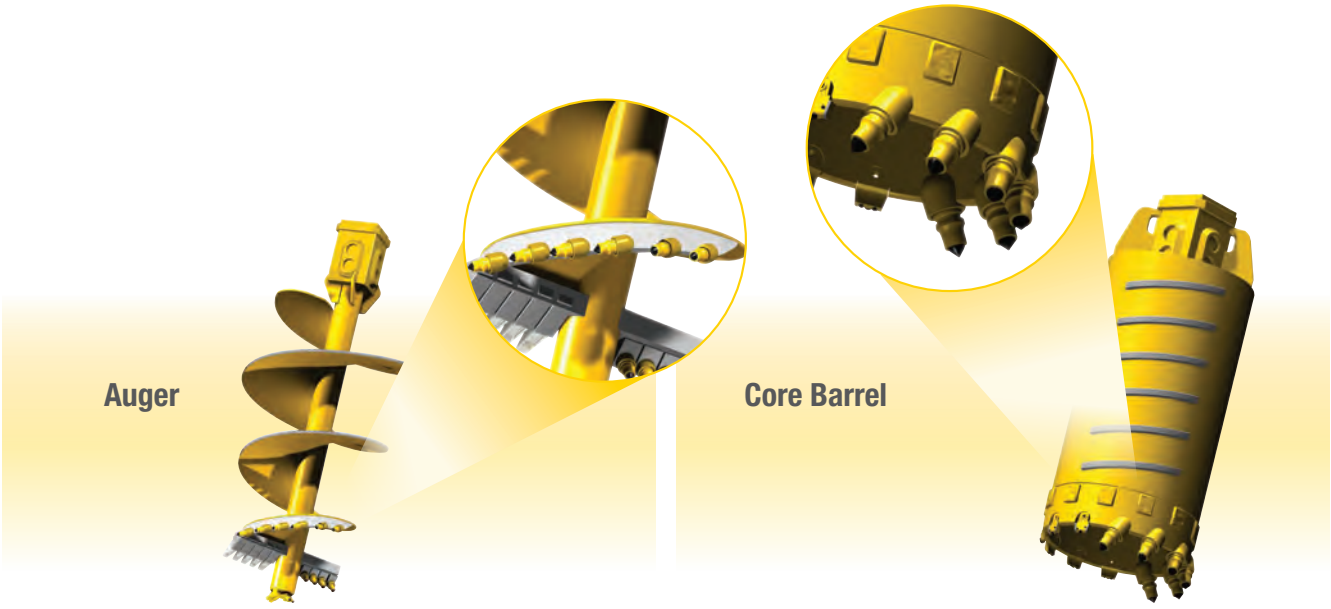

FD25-X Series Tools

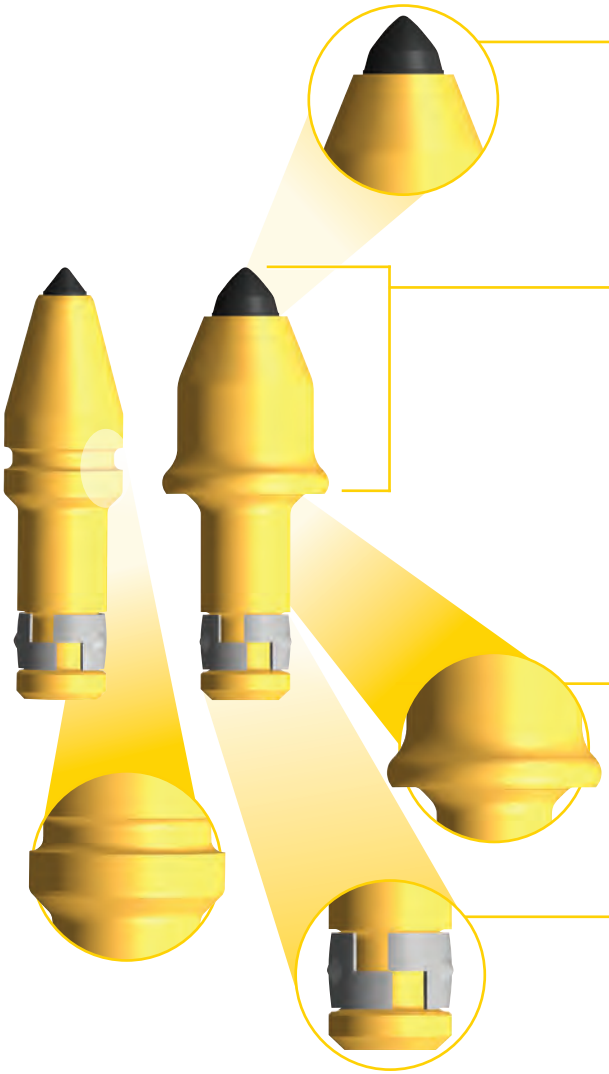

Narrow Bottom Carbide Tip

- Provides maximum combination of strength and wear resistance.

X Series

- Provides exceptionally durable bodies due to our proprietary hardness (throughout the entire head) for better wear protection.

Body

- Hardened steel alloy body for maximum strength. Two tools are available in standard 2.5" gage length.

Wide Collar

- Provides increased block face protection.

Retainer

- Provides holding power in worn blocks while maintaining rotation.

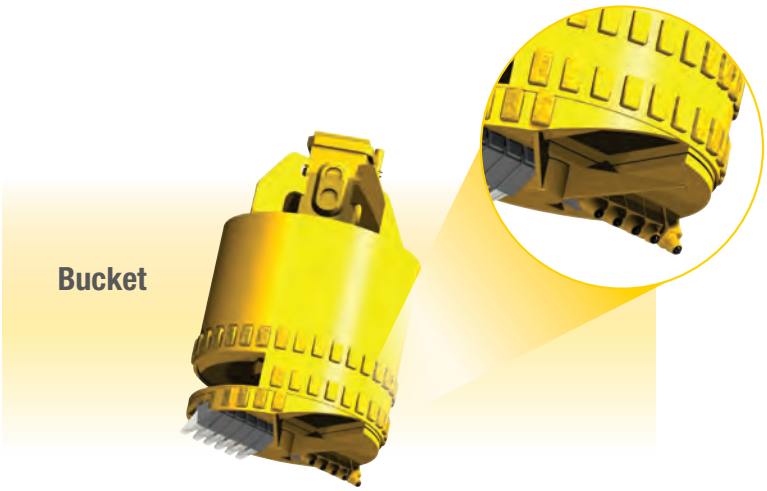

C31HD X

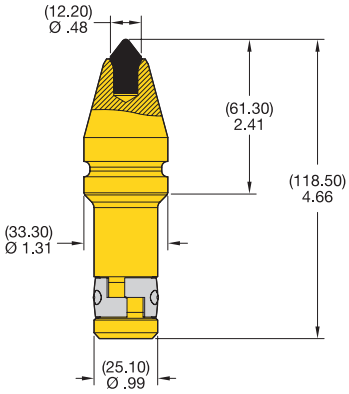

order number	catalogue number	block	retainer
1010787	C31HD X	C30	U40 RETAINER

C316

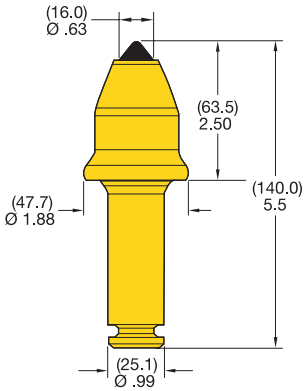

order number	catalogue number	block	retainer
6871953	C316	C30H	TR1-D RETAINER

Packaging Information

order number	catalogue number	pieces per container	container weight (approximate) kg	container weight (approximate) lbs	pieces per pallet	pallet weight (approximate) kg	pallet weight (approximate) lbs
1010787	C31HD X	25	12.2	27.0	1250	612.3	1350
6871953	C316	15	11.4	25.2	750	572	1260

Dimensions shown in (millimetres) and inches.

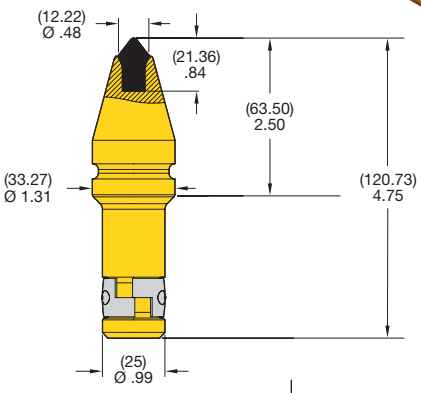

FD25-12.5-X

order number	catalogue number	block	retainer
5619993	**FD25-12.5-X**	**C30**	**U40 RETAINER**

NOTE: Improved C31HD conical.
Conical includes retainer.
Block and additional retainers sold separately.

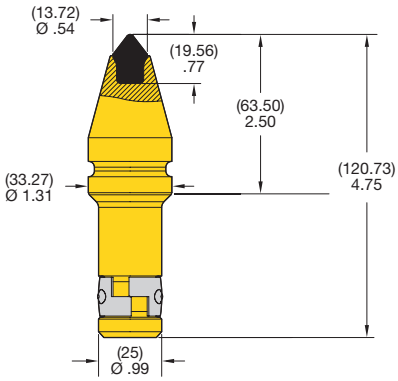

FD25-14-X

order number	catalogue number	block	retainer
5619994	**FD25-14-X**	**C30**	**U40 RETAINER**

NOTE: Conical includes retainer.
Block and additional retainers sold separately.

Packaging Information

order number	catalogue number	pieces per container	container weight (approximate) kg	container weight (approximate) lbs	pieces per pallet	pallet weight (approximate) kg	pallet weight (approximate) lbs
5619993	**FD25-12.5-X**	25	12.2	27.0	1250	612.3	1350
5619994	**FD25-14-X**	25	12.4	27.3	1250	618.0	1362

Dimensions shown in (millimetres) and inches.

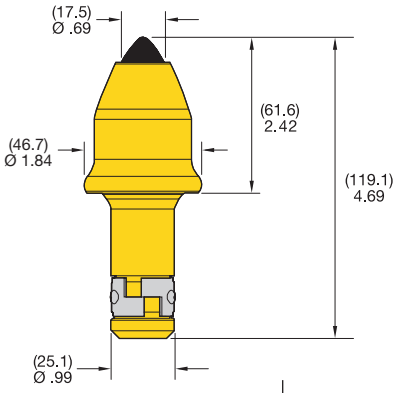

FD25W-17.5-X

order number	catalogue number	block	retainer
5619998	**FD25W-17.5-X**	**C30H**	**U40 RETAINER**

NOTE: Conical includes retainer.
Block and additional retainers sold separately.

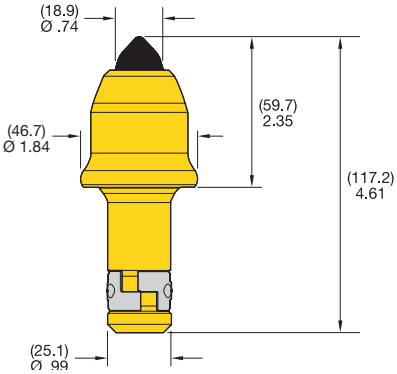

FD25W-19-X

order number	catalogue number	block	retainer
5619997	**FD25W-19-X**	**C30H**	**U40 RETAINER**

NOTE: Conical includes retainer.
Block and additional retainers sold separately.

Packaging Information

order number	catalogue number	pieces per container	container weight (approximate) kg	container weight (approximate) lbs	pieces per pallet	pallet weight (approximate) kg	pallet weight (approximate) lbs
5619998	**FD25W-17.5-X**	20	13.1	28.8	1000	653.2	1510
5619997	**FD25W-19-X**	20	13.2	29.2	1000	662.2	1460

Dimensions shown in (millimetres) and inches.

C30

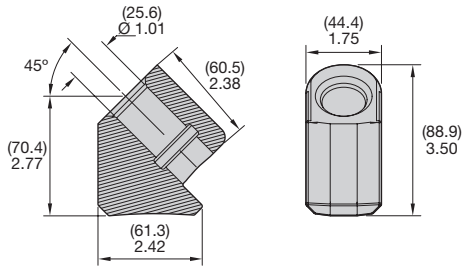

order number	catalogue number
1012279	**C30**

C30-G

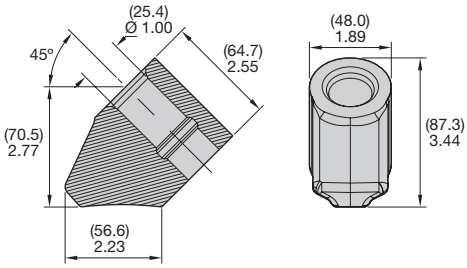

order number	catalogue number
1132122	**C30-G**

C30H

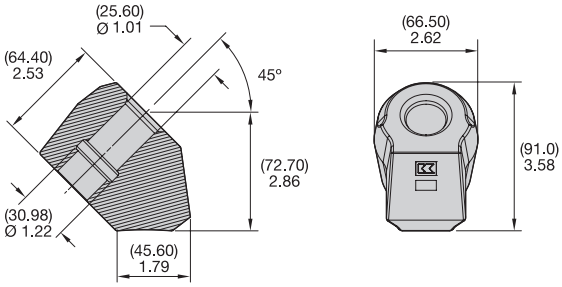

order number	catalogue number
1011585	**C30H/U40H BLOCK**

Packaging Information

order number	catalogue number	pieces per container	container weight (approximate) kg	container weight (approximate) lbs	pieces per pallet	pallet weight (approximate) kg	pallet weight (approximate) lbs
1012279	**C30**	12	14.0	31.0	600	702.2	1605
1132122	**C30-G**	15	19.7	43.5	540	741.6	1635
1011585	**C30H/U40H BLOCK**	8	14.7	32.4	400	750.7	1655

Dimensions shown in (millimetres) and inches.

C30HP/U40HP BIT PULLER ASSEM

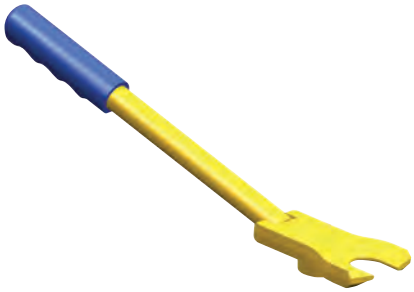

order number	catalogue number
1011982	C30HP/U40HP BIT PULLER ASSEM

KHP2 KMTL PUNCH

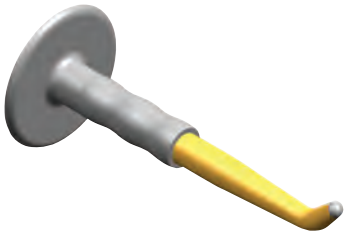

order number	catalogue number
1012247	KHP2 KMTL PUNCH

U70 PAD COATED PULLER

order number	catalogue number
3043394	U70 PAD COATED PULLER

TR1-D Retainer

order number	catalogue number
4065385	TR1-D RETAINER

UNIVERSAL TR3 PULLER

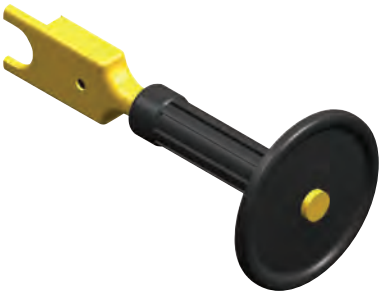

order number	catalogue number
5500279	UNIVERSAL TR3 PULLER

No 3

22mm Systems

Foundation Drilling Attachments: Auger, Bucket, and Core Barrel

Don't let the name fool you — **buckets** can drill in cohesive soil to medium hard rock conditions below groundwater levels. Kennametal offers tooling for different bucket designs, which can tackle tough cutting conditions in a cost-effective way.

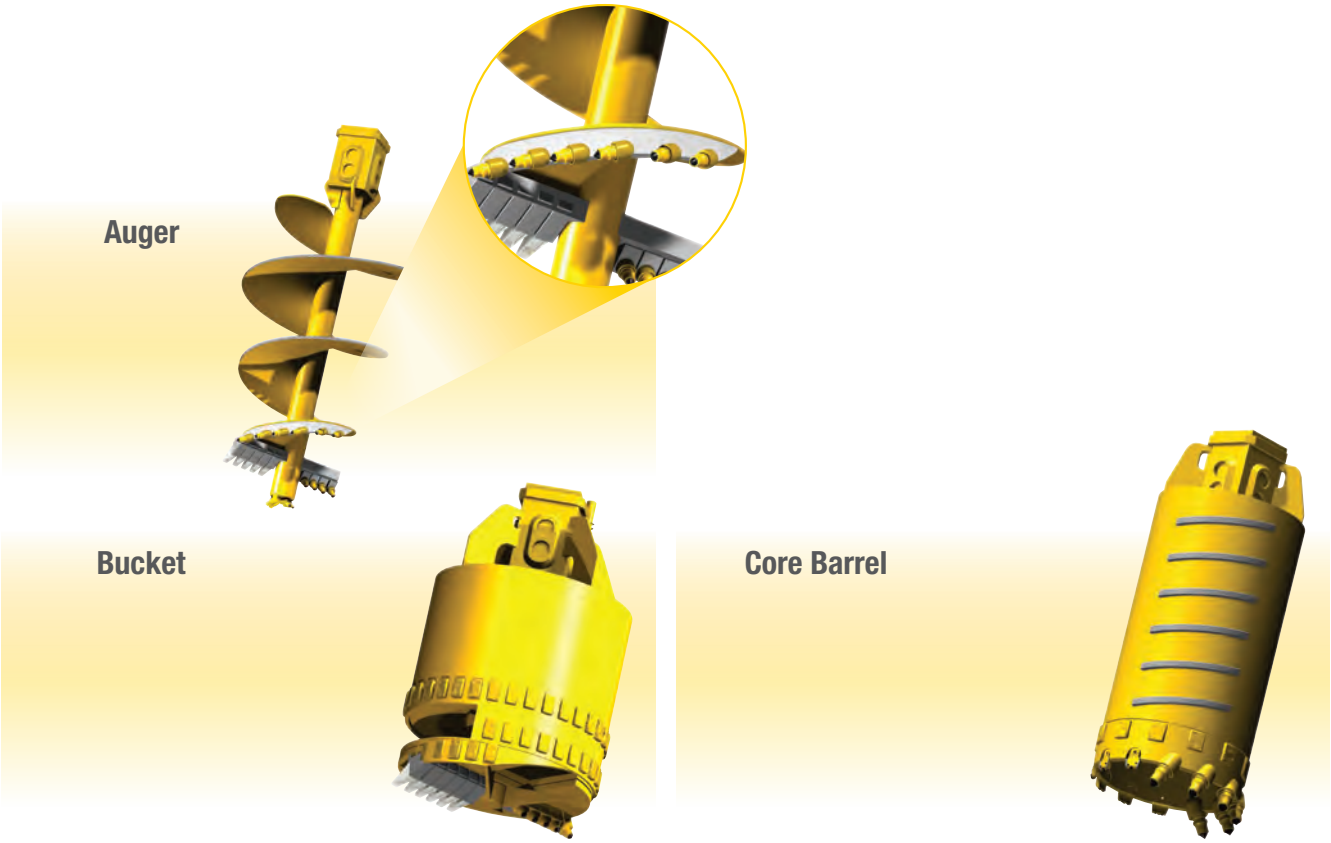

Conicals

- SLR Retaining Ring — proven external retainer system.

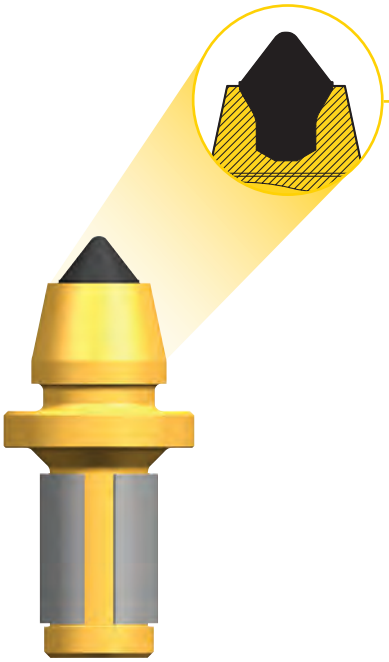

Narrow Bottom (NB) Tips —
Unique Design to Maximise Cutting Capabilities

- Superior strength by providing maximum steel support and longer sharp profile life.
- Combines abrasive resistance of a cap tip and impact resistance of a plug tip.
- Triple-angle carbide insert for hard conditions.
- SD Series — with dimpled long retainer.

Block Systems

- The SLB01 block is ideal for challenging foundation drilling applications.
- Increased height for clearance of externally retained tools.
- Larger footprint for increased weld strength and stability.

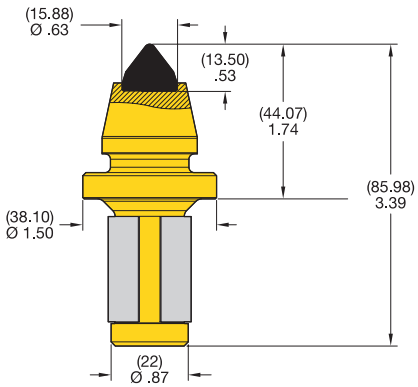

SM02

order number	catalogue number	block	retainer
1010817	**SM02**	**C87FD**	**LR87 RETAINER**

NOTE: Conical includes retainer.
Block and additional retainers sold separately.

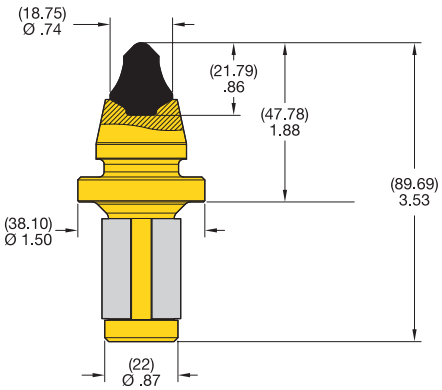

SM04

order number	catalogue number	block	retainer
1317495	**SM04**	**C87FD**	**LR87 RETAINER**

NOTE: Conical includes retainer.
Block and additional retainers sold separately.

Packaging Information

order number	catalogue number	pieces per container	container weight (approximate) kg	container weight (approximate) lbs	pieces per pallet	pallet weight (approximate) kg	pallet weight (approximate) lbs
1010817	**SM02**	50	15.0	33.0	2,500	750	1650
1317495	**SM04**	50	15.5	34.5	2,500	775	1725

Dimensions shown in (millimetres) and inches.

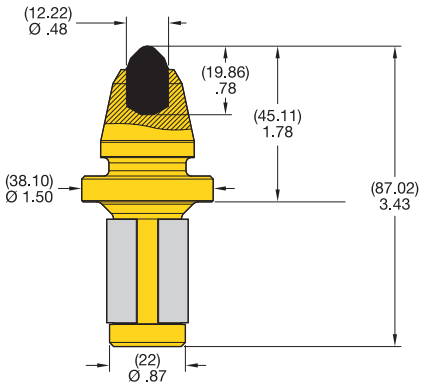

SM06

order number	catalogue number	block	retainer
1010815	**SM06**	**C87FD**	**LR87 RETAINER**

NOTE: Conical includes retainer.
Block and additional retainers sold separately.

Packaging Information

order number	catalogue number	pieces per container	container weight (approximate) kg	container weight (approximate) lbs	pieces per pallet	pallet weight (approximate) kg	pallet weight (approximate) lbs
1010815	**SM06**	50	14.5	34.0	2,500	725	1700

Dimensions shown in (millimetres) and inches.

SM Series — Unique Design to Maximise Cutting Capabilities

Narrow Bottom (NB) Tips

- Superior strength by providing maximum steel support and longer sharp profile life.
- Combines abrasive resistance of a cap tip and impact resistance of a plug tip.
- Triple-angle carbide insert for hard conditions.

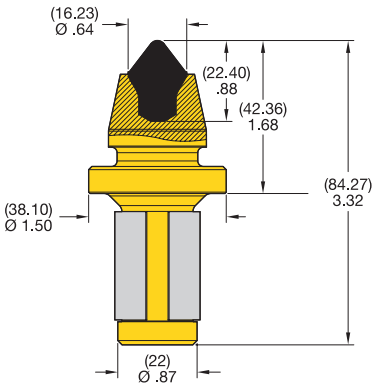

SM09

order number	catalogue number	block	retainer
4143706	**SM09**	**C87FD**	**LR87 RETAINER**

NOTE: Conical includes retainer.
Block and additional retainers sold separately.

Packaging Information

order number	catalogue number	pieces per container	container weight (approximate) kg	container weight (approximate) lbs	pieces per pallet	pallet weight (approximate) kg	pallet weight (approximate) lbs
4143706	**SM09**	50	15.0	33.5	2,500	750	1675

Dimensions shown in (millimetres) and inches.

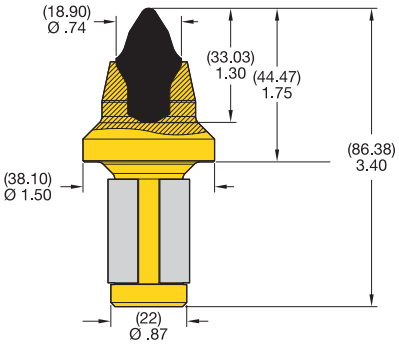

SM08

order number	catalogue number	block	retainer
3663476	**SM08**	**C87FD**	**LR87 RETAINER**

NOTE: Conical includes retainer.
Block and additional retainers sold separately.

Packaging Information

order number	catalogue number	pieces per container	container weight (approximate) kg	container weight (approximate) lbs	pieces per pallet	pallet weight (approximate) kg	pallet weight (approximate) lbs
3663476	**SM08**	50	16.5	36.0	2,500	825	1800

Dimensions shown in (millimetres) and inches.

SL04

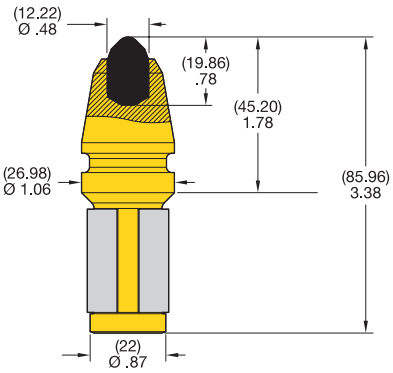

order number	catalogue number	block	retainer
1010795	**SL04**	**C87FD**	**LR87 RETAINER**

NOTE: Conical includes retainer.
Block and additional retainers sold separately.

SL07

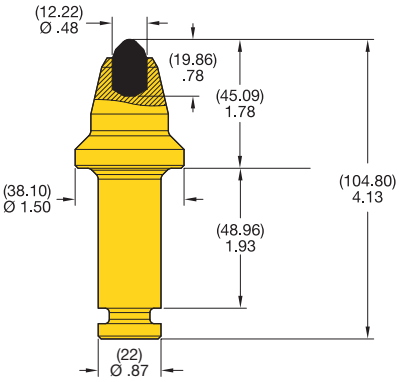

order number	catalogue number	block	retainer
1809484	**SL07**	**SLB01 - G**	**SLR RETAINING RING**

NOTE: Conical includes retainer.
Block and additional retainers sold separately.

Packaging Information

order number	catalogue number	pieces per container	container weight (approximate) kg	container weight (approximate) lbs	pieces per pallet	pallet weight (approximate) kg	pallet weight (approximate) lbs
1010795	**SL04**	60	16.2	36.0	3,000	810	1800
1809484	**SL07**	40	15.2	33.6	2,000	760	1680

Dimensions shown in (millimetres) and inches.

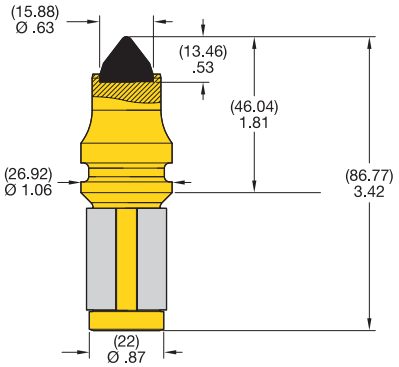

SL02

order number	catalogue number	block	retainer
1010797	SL02	C87FD	LR87 RETAINER

NOTE: Conical includes retainer.
Block and additional retainers sold separately.

Packaging Information

order number	catalogue number	pieces per container	container weight (approximate) kg	container weight (approximate) lbs	pieces per pallet	pallet weight (approximate) kg	pallet weight (approximate) lbs
1010797	SL02	70	17.5	39.2	3,500	875	1960

Dimensions shown in (millimetres) and inches.

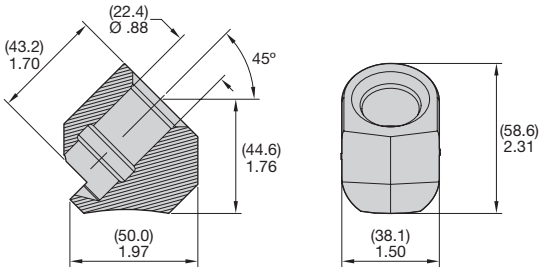

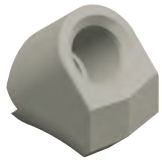

C87B

order number	catalogue number
1012275	**C87B**

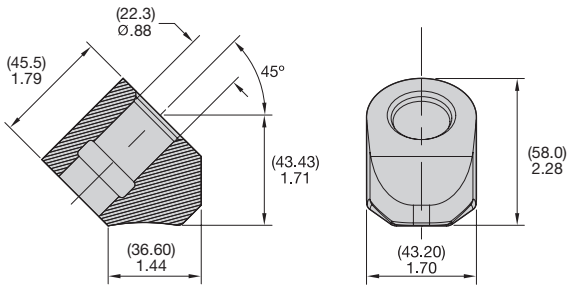

C87FD Block

order number	catalogue number
6012116	**C87FD BLOCK**

Packaging Information

order number	catalogue number	pieces per container	container weight (approximate) kg	container weight (approximate) lbs	pieces per pallet	pallet weight (approximate) kg	pallet weight (approximate) lbs
1012275	**C87B**	25	10.89	24	1250	544.5	1200
6012116	**C87FD BLOCK**	25	12.59	27.75	1250	629.5	1388

Dimensions shown in (millimetres) and inches.

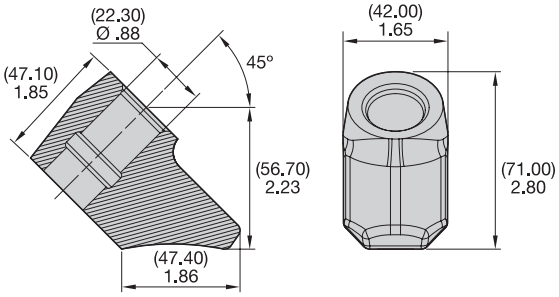

SLB01 - G

order number	catalogue number
1858587	**SLB01 - G**

Packaging Information

order number	catalogue number	pieces per container	container weight (approximate) kg	container weight (approximate) lbs	pieces per pallet	pallet weight (approximate) kg	pallet weight (approximate) lbs
1858587	**SLB01 - G**	20	12.70	28	1000	635	1400

Dimensions shown in (millimetres) and inches.

C123/U50 HAMMER PULLER

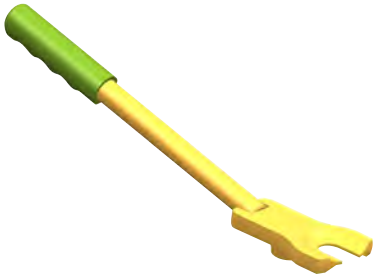

order number	catalogue number
1012016	C123/U50 HAMMER PULLER

KHP2 KMTL PUNCH

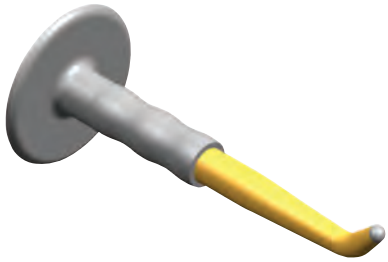

order number	catalogue number
1012247	KHP2 KMTL PUNCH

SLR RETAINING RING

order number	catalogue number
1817888	SLR RETAINING RING

C21R REMOVER TOOL W/GRIP

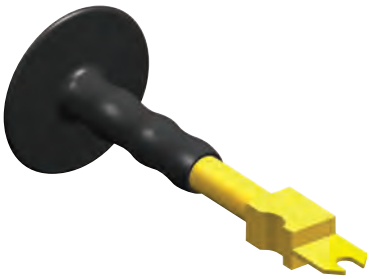

order number	catalogue number
1012348	C21R REMOVER TOOL W/ GRIP

KENNAMETAL

20mm Systems

Foundation Drilling Attachments: Bucket and Core Barrel

Whether you are cutting concrete or hard rock, you want tooling that provides the highest productivity across every **core barrel** drilling job. Kennametal offers various cutting systems to fit your core barrel cutting ring design. Our cutting systems make the most of your investment, offering higher efficiency and productivity year after year.

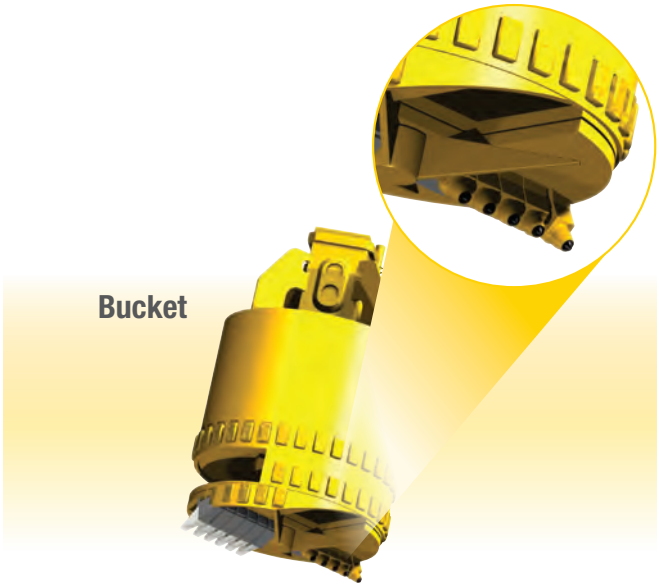

Conicals

Our RL09, RL10, and RS17 conicals feature:

- Solid carbide tips in three different styles for better penetration and higher impact strength in soft to hard cutting conditions.

- Extra-wide collar for superb block face protection.
- Puller groove for easier conical removal.

- Dimpled retainer provides excellent holding power in the block.

Blocks

Our blocks are ideal for challenging foundation drilling applications and feature:

- Increased height for clearance of externally retained tools.
- Larger footprint for increased weld strength and stability.

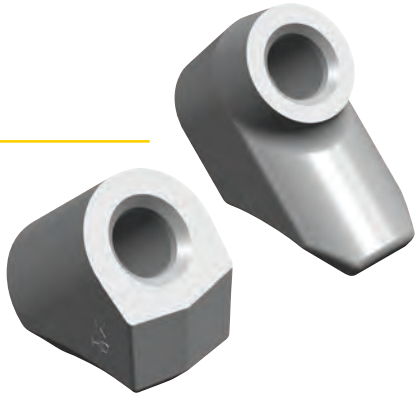

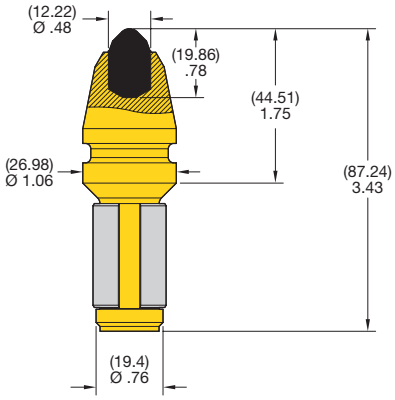

RL07

order number	catalogue number	block	retainer
1010782	**RL07**	**C3RB**	**LR76 RETAINER**

NOTE: Conical includes retainer.
Block and additional retainers sold separately.

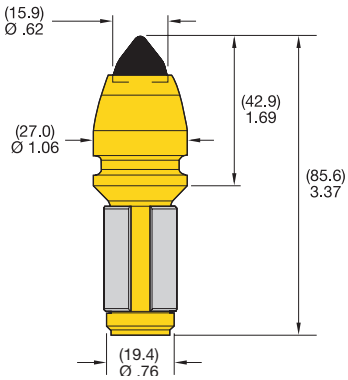

RL08

order number	catalogue number	block	retainer
1010767	**RL08**	**C3RB**	**LR76 RETAINER**

NOTE: Conical includes retainer.
Block and additional retainers sold separately.

Packaging Information

order number	catalogue number	pieces per container	container weight (approximate) kg	container weight (approximate) lbs	pieces per pallet	pallet weight (approximate) kg	pallet weight (approximate) lbs
1010782	**RL07**	70	17.1	37.8	3500	857.3	1890
1010767	**RL08**	75	16.3	36.0	3750	816.5	1800

Dimensions shown in (millimetres) and inches.

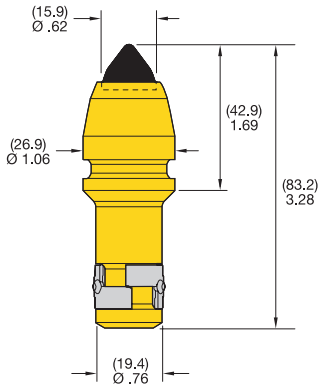

RL09

order number	catalogue number	block	retainer
1010770	RL09	C10FD	C10 RETAINER

NOTE: Conical includes retainer.
Block and additional retainers sold separately.

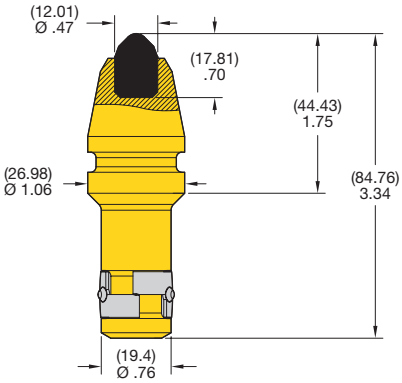

RL10

order number	catalogue number	block	retainer
1010784	RL10	C10FD	C10 RETAINER

NOTE: Conical includes retainer.
Block and additional retainers sold separately.

Packaging Information

order number	catalogue number	pieces per container	container weight (approximate) kg	container weight (approximate) lbs	pieces per pallet	pallet weight (approximate) kg	pallet weight (approximate) lbs
1010770	RL09	75	15.6	34.5	3750	782.4	1725
1010784	RL10	75	17.3	38.3	3750	867.5	1913

Dimensions shown in (millimetres) and inches.

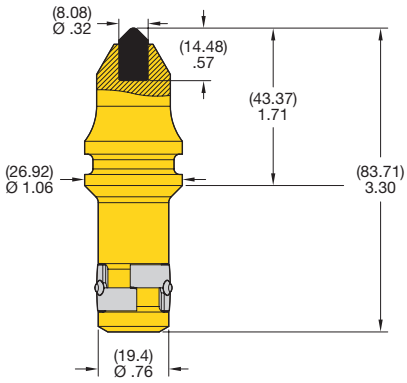

RL11

order number	catalogue number	block	retainer
1010772	RL11	C10FD	C10 RETAINER

NOTE: Conical includes retainer.
Block and additional retainers sold separately.

Packaging Information

order number	catalogue number	pieces per container	container weight (approximate) kg	container weight (approximate) lbs	pieces per pallet	pallet weight (approximate) kg	pallet weight (approximate) lbs
1010772	RL11	75	15.0	33.0	3750	748.4	1650

Dimensions shown in (millimetres) and inches.

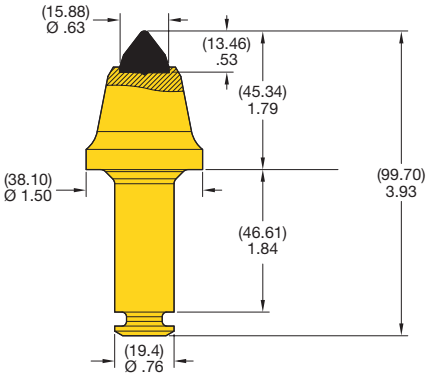

C3R

order number	catalogue number	block	retainer
1010910	C3R	C3RB	C3R Retainer

NOTE: Conical includes retainer.
Block and additional retainers sold separately.

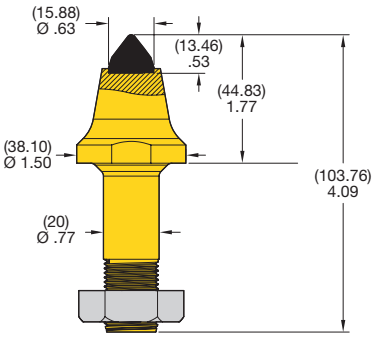

C 3T

order number	catalogue number	block	retainer
1010734	C 3T	C3RB	3/4 16UNF NUT

NOTE: Conical includes retainer.
Block and additional retainers sold separately.

Packaging Information

order number	catalogue number	pieces per container	container weight (approximate) kg	container weight (approximate) lbs	pieces per pallet	pallet weight (approximate) kg	pallet weight (approximate) lbs
1010910	C3R	40	13.4	29.6	2000	671.3	1480
1010734	C 3T	30	10.5	23.1	1500	523.9	1155

Dimensions shown in (millimetres) and inches.

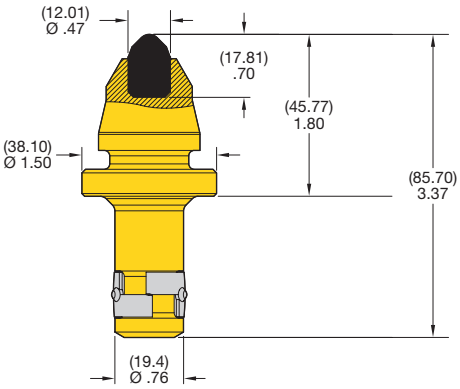

RS16

order number	catalogue number	block	retainer
1156102	**RS16**	**C10FD**	**C10 RETAINER**

NOTE: Conical includes retainer.
Block and additional retainers sold separately.

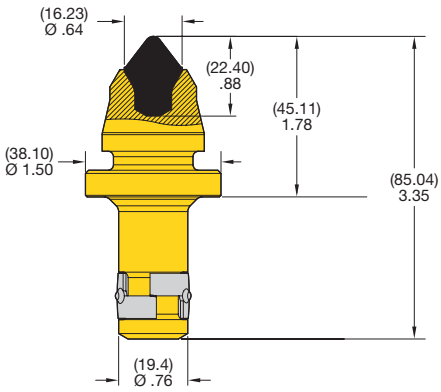

RS17

order number	catalogue number	block	retainer
1156107	**RS17**	**C10FD**	**C10 RETAINER**

NOTE: Conical includes retainer.
Block and additional retainers sold separately.

Packaging Information

order number	catalogue number	pieces per container	container weight (approximate) kg	container weight (approximate) lbs	pieces per pallet	pallet weight (approximate) kg	pallet weight (approximate) lbs
1156102	**RS16**	70	19.7	43.4	2800	787.4	1815
1156107	**RS17**	50	14.1	31.0	2000	562.5	1240

Dimensions shown in (millimetres) and inches.

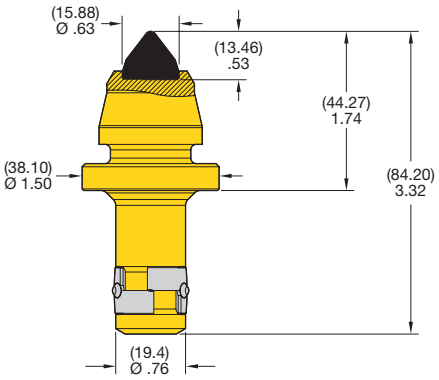

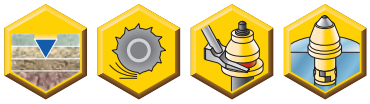

RS18

order number	catalogue number	block	retainer
1107032	**RS18**	**C10FD**	**C10 RETAINER**

NOTE: Conical includes retainer.
Block and additional retainers sold separately.

Packaging Information

order number	catalogue number	pieces per container	container weight (approximate) kg	container weight (approximate) lbs	pieces per pallet	pallet weight (approximate) kg	pallet weight (approximate) lbs
1107032	**RS18**	70	19.1	42.0	2800	762.0	1750

Dimensions shown in (millimetres) and inches.

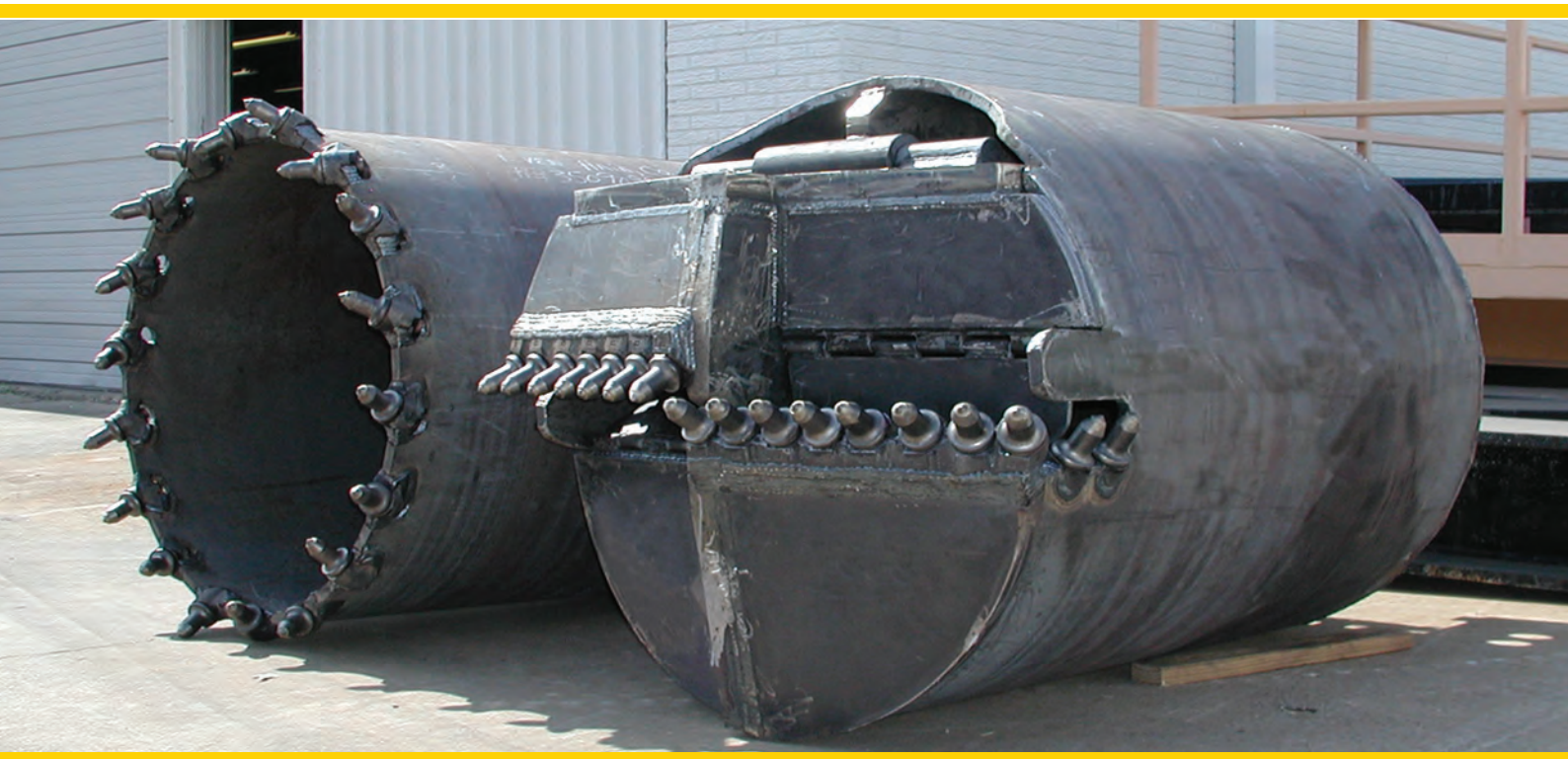

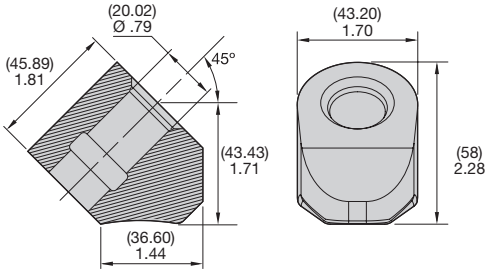

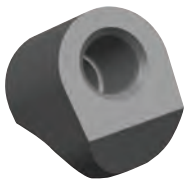

C10FD Block

order number	catalogue number
6012115	**C10FD BLOCK**

NOTE: Conical includes retainer.
Block and additional retainers sold separately.

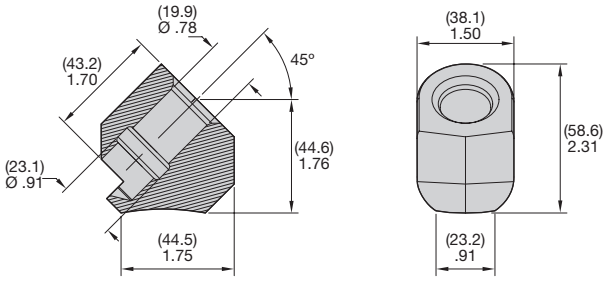

C10H

order number	catalogue number
1012280	**C10H**

Packaging Information

order number	catalogue number	pieces per container	container weight (approximate) kg	container weight (approximate) lbs	pieces per pallet	pallet weight (approximate) kg	pallet weight (approximate) lbs
6012115	**C10FD BLOCK**	25	13.0	28.8	1250	652.0	1438
1012280	**C10H**	35	15.6	34.3	1750	777.9	1715

Dimensions shown in (millimetres) and inches.

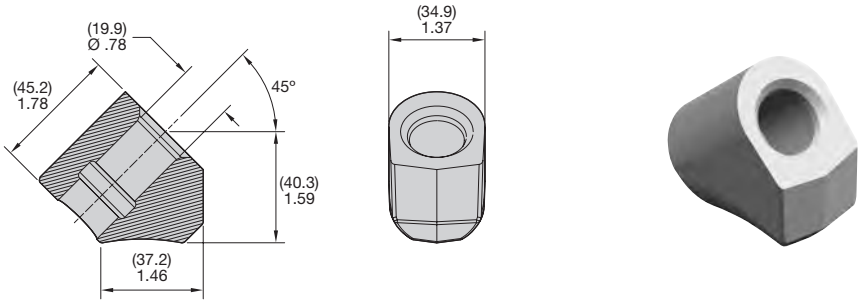

C10 BLOCK

order number	catalogue number
1012278	**C10 BLOCK**

NOTE: Conical includes retainer.
Block and additional retainers sold separately.

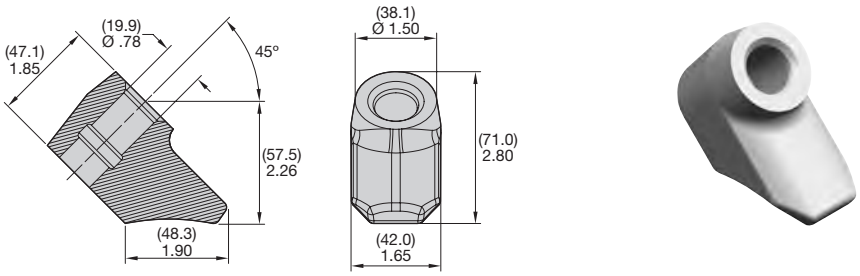

C3RB BLOCK

order number	catalogue number
1886760	**C3RB BLOCK**

NOTE: Conical includes retainer.
Block and additional retainers sold separately.

Packaging Information

order number	catalogue number	pieces per container	container weight (approximate) kg	container weight (approximate) lbs	pieces per pallet	pallet weight (approximate) kg	pallet weight (approximate) lbs
1012278	**C10 BLOCK**	35	12.9	28.4	1750	643.0	1417
1886760	**C3RB BLOCK**	20	13.4	29.6	1000	671.8	1550

Dimensions shown in (millimetres) and inches.

3/4 16UNF NUT

order number	catalogue number
1011884	3/4 16UNF NUT

C123/U50 HAMMER PULLER

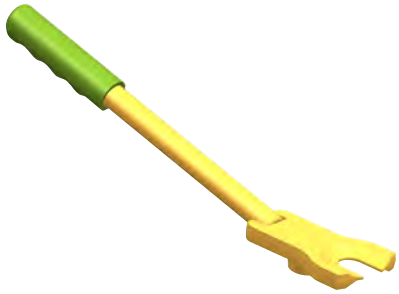

order number	catalogue number
1012016	C123/U50 HAMMER PULLER

C3R RETAINER

order number	catalogue number
1012120	C3R RETAINER

C21R REMOVER TOOL W/GRIP

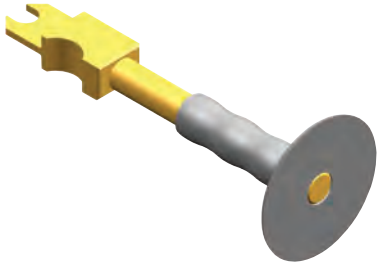

order number	catalogue number
1012348	C21R REMOVER TOOL W/ GRIP

KENNAMETAL

19mm Systems

Foundation Drilling Attachments: Bucket and Core Barrel

You want tools that provide high productivity across every foundation drilling job. Kennametal offers various cutting systems to fit your **core barrel** cutting design. Our cutting systems make the most of your investment, offering higher efficiency and productivity year after year.

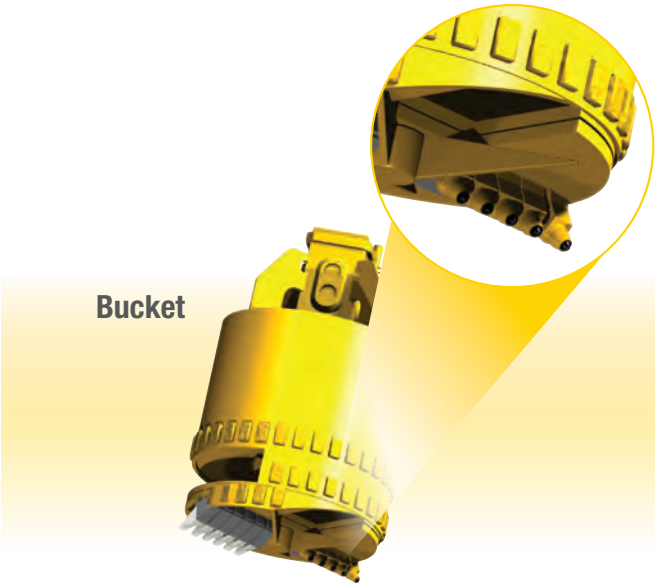

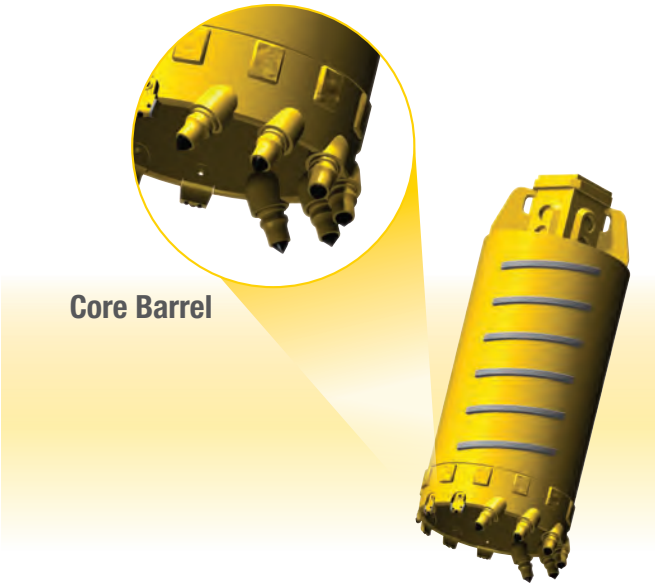

Conicals

Our C21F and C21FHD conicals feature:

- Solid carbide tips in two different styles for better penetration and higher impact strength in soft to hard cutting conditions.

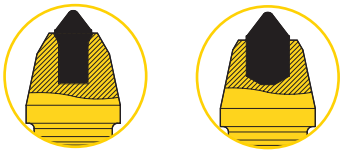

- Extra-wide collar for superb block face protection.
- Puller groove for easier conical removal.

- Dimpled retainer provides excellent holding power in the block.

Blocks

Our blocks are ideal for challenging foundation drilling applications and feature:

- Increased height for clearance of externally retained tools.
- Larger footprint for increased weld strength and stability.

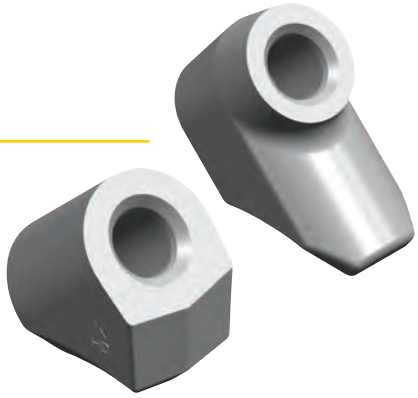

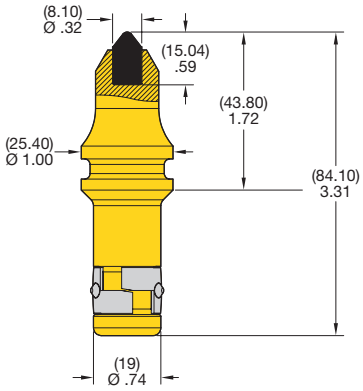

C21

order number	catalogue number	block	retainer
1010748	**C21**	**C20/U43NS**	**U43K**

NOTE: Conical includes retainer.
Block and additional retainers sold separately.

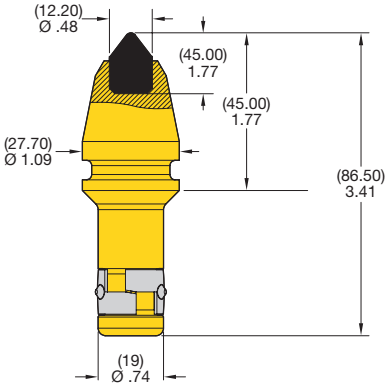

C21HD

order number	catalogue number	block	retainer
1010789	**C21HD**	**C20/U43NS**	**U43K**

NOTE: Conical includes retainer.
Block and additional retainers sold separately.

Packaging Information

order number	catalogue number	pieces per container	container weight (approximate) kg	container weight (approximate) lbs	pieces per pallet	pallet weight (approximate) kg	pallet weight (approximate) lbs
1010748	**C21**	75	13.6	30.0	3750	680.4	1500
1010789	**C21HD**	75	17.0	37.5	3750	850.5	1945

Dimensions shown in (millimetres) and inches.

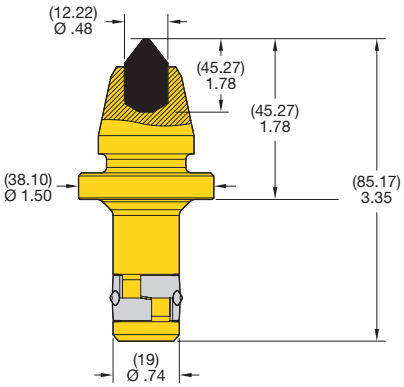

C21F HD

order number	catalogue number	block	retainer
5169340	**C21F HD**	**C20/U43NS**	**U43K**

NOTE: Conical includes retainer.
Block and additional retainers sold separately.

Packaging Information

order number	catalogue number	pieces per container	container weight (approximate) kg	container weight (approximate) lbs	pieces per pallet	pallet weight (approximate) kg	pallet weight (approximate) lbs
5169340	**C21F HD**	50	13.2	29.0	2500	657.7	1520

Dimensions shown in (millimetres) and inches.

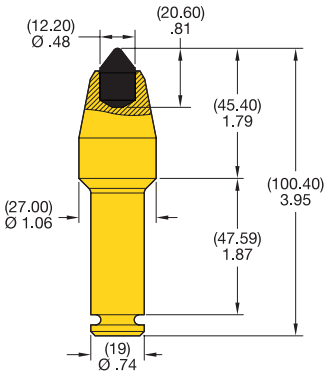

C21RHD

order number	catalogue number	block	retainer
1010804	**C21RHD**	**C20/U43NS**	**C21R RETAINER**

NOTE: Conical includes retainer.
Block and additional retainers sold separately.

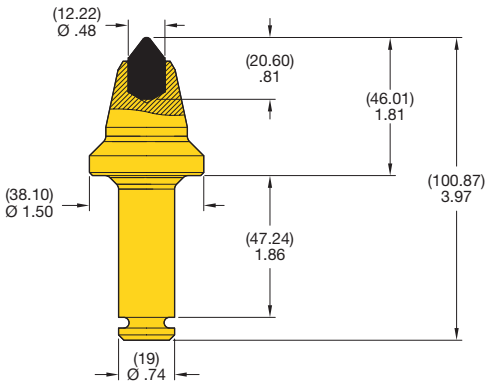

C21RFHD

order number	catalogue number	block	retainer
1780648	**C21RFHD**	**C20/U43NS**	**C21R RETAINER**

NOTE: Conical includes retainer.
Block and additional retainers sold separately.

Packaging Information

order number	catalogue number	pieces per container	container weight (approximate) kg	container weight (approximate) lbs	pieces per pallet	pallet weight (approximate) kg	pallet weight (approximate) lbs
1010804	**C21RHD**	60	16.1	35.4	3000	802.9	1850
1780648	**C21RFHD**	50	16.1	35.5	2500	805.1	1775

Dimensions shown in (millimetres) and inches.

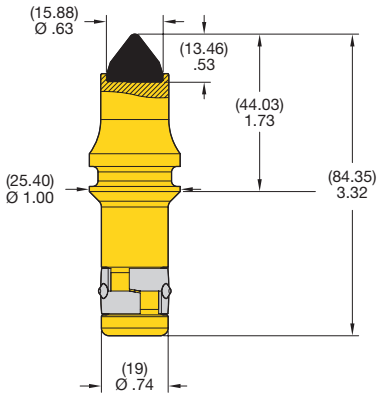

C23

order number	catalogue number	block	retainer
1010758	C23	C20/U43NS	U43K

NOTE: Conical includes retainer.
Block and additional retainers sold separately.

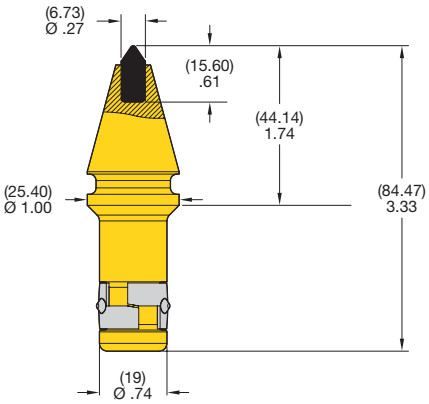

C24

order number	catalogue number	block	retainer
1010302	C24	C20/U43NS	U43K

NOTE: Conical includes retainer.
Block and additional retainers sold separately.

Packaging Information

order number	catalogue number	pieces per container	container weight (approximate) kg	container weight (approximate) lbs	pieces per pallet	pallet weight (approximate) kg	pallet weight (approximate) lbs
1010758	C23	75	15.0	33.0	3750	748.4	1845
1010302	C24	75	13.3	29.3	3750	663.4	1463

Dimensions shown in (millimetres) and inches.

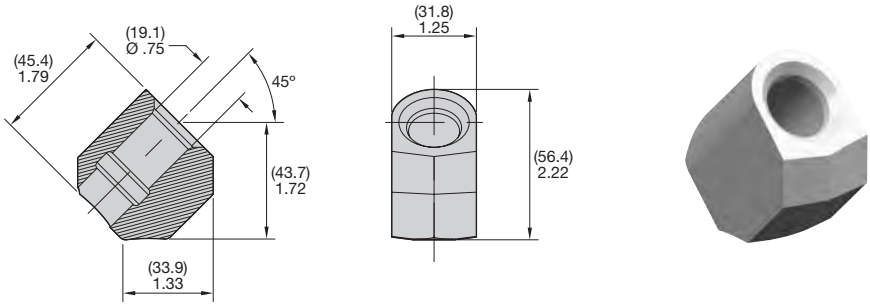

C20

order number	catalogue number
1012273	**C20**

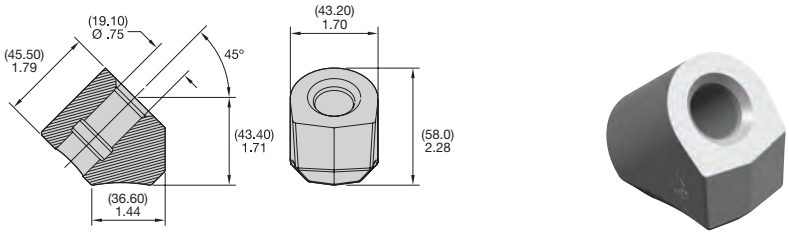

C20FD

order number	catalogue number
6012114	**C20FD BLOCK**

Packaging Information

order number	catalogue number	pieces per container	container weight (approximate) kg	container weight (approximate) lbs	pieces per pallet	pallet weight (approximate) kg	pallet weight (approximate) lbs
1012273	**C20**	40	12.9	28.4	2000	644.1	1420
6012114	**C20FD BLOCK**	25	13.4	29.5	1250	669.0	1475

Dimensions shown in (millimetres) and inches.

C20/U43HP BIT PULLER ASSEM

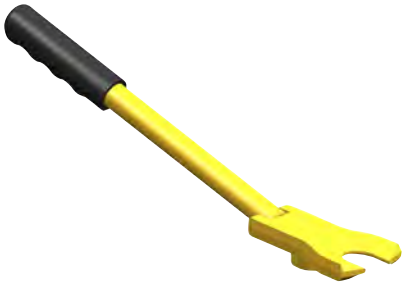

order number	catalogue number
1011984	C20/U43HP BIT PULLER ASSEM

C21R RETAINER

order number	catalogue number
1011961	C21R RETAINER

C21R REMOVER TOOL W/GRIP

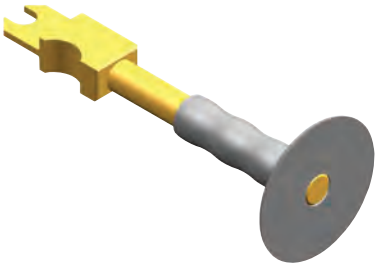

order number	catalogue number
1012348	C21R REMOVER TOOL W/ GRIP

11mm–14mm Systems

Foundation Drilling Attachments: Auger with Pilot Bit

To run a cost-effective foundation drilling operation, you need to get the job done right the first time with precision. A reliable **pilot** in your foundation drilling attachments plays a significant role. Our new CM Mini Series offers a range of small-diameter blocks and bits in narrow bottom (NB), plug, and cap-style tips for a wide range of cutting conditions and attachment designs.

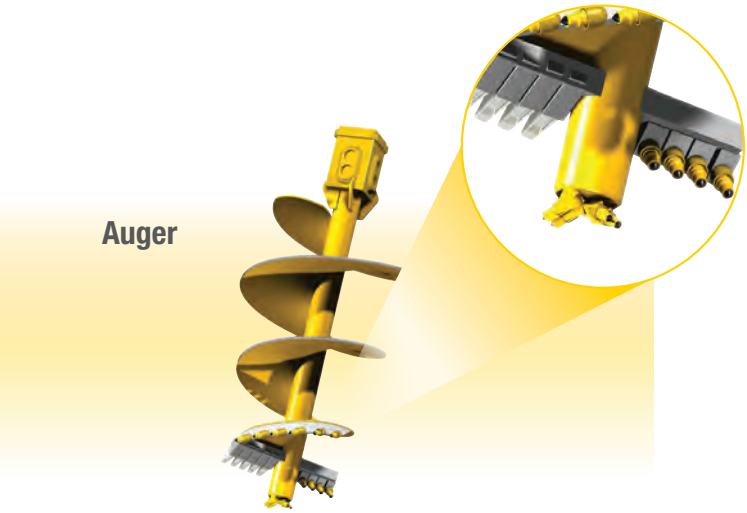

Conicals

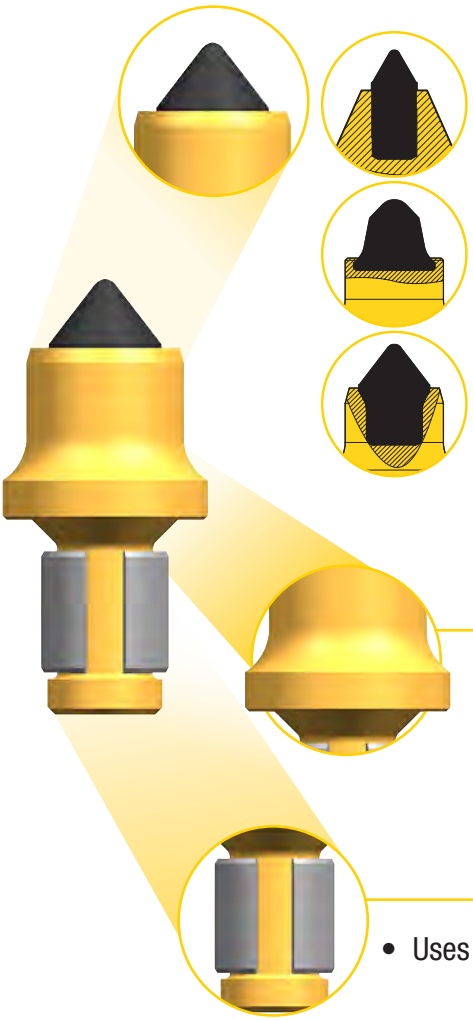

14mm (CM Series) Platform

The CM Mini Series offers a range of small-diameter carbide tip styles, depending on your application:

- Plug tips feature a physical lock between steel and carbide for maximum toughness.
- Cap tips are used in abrasive applications with the carbide on the business end, not sunk into the shank.
- Narrow bottom tips withstand abrasive cutting, like a cap with the physical support of a plug. Unlike a cap point that gets blunt at the end of wear life, narrow bottom tips sharpen as they wear, making them an excellent choice in rock cutting, asphalts, and abrasives.

- Wide collar provides maximum block protection.

- Uses easy-to-install/remove LR55 sleeve retainer for extended bore life.

Block Systems

Features cannon-style face for improved tool rotation and larger base for stability and weld strength.

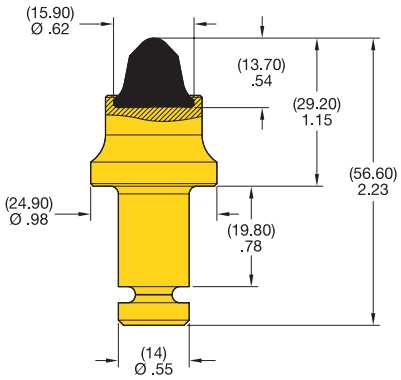

CM63

order number	catalogue number	block	retainer
1795208	**CM63**	**–**	**CM6H RETAINER**

NOTE: Conical includes retainer.
Block and additional retainers sold separately.

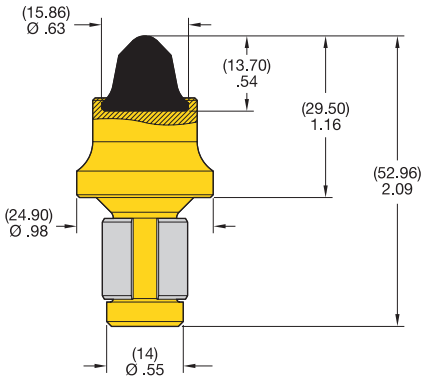

CM65

order number	catalogue number	block	retainer
1876905	**CM65**	**CMB6-L**	**LR55 RETAINER**

NOTE: Conical includes retainer.
Block and additional retainers sold separately.

Packaging Information

order number	catalogue number	pieces per container	container weight (approximate) kg	container weight (approximate) lbs	pieces per pallet	pallet weight (approximate) kg	pallet weight (approximate) lbs
1795208	**CM63**	150	15.0	31.5	7,500	750	1575
1876905	**CM65**	150	13.5	30.8	7,500	675	1538

Dimensions shown in (millimetres) and inches.

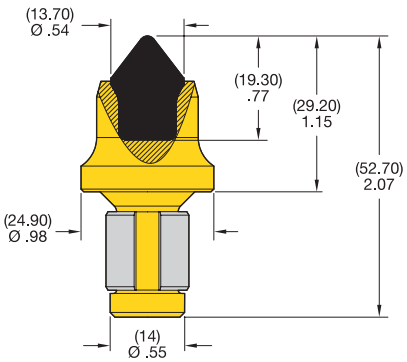

CM69T

order number	catalogue number	block	retainer
5515288	CM69T	CMB6-L	LR55 RETAINER

NOTE: Conical includes retainer.
Block and additional retainers sold separately.

Packaging Information

order number	catalogue number	pieces per container	container weight (approximate) kg	container weight (approximate) lbs	pieces per pallet	pallet weight (approximate) kg	pallet weight (approximate) lbs
5515288	CM69T	150	13.5	28.5	7,500	675	1425

Dimensions shown in (millimetres) and inches.

Horizontal Directional Drilling

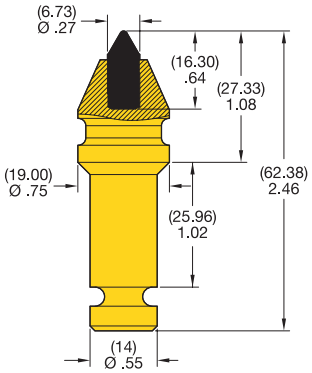

CM61

order number	catalogue number	block	retainer
1094015	**CM61**	**–**	**CM6L RETAINER**

NOTE: Conical includes retainer.
Block and additional retainers sold separately.

Packaging Information

order number	catalogue number	pieces per container	container weight (approximate) kg	container weight (approximate) lbs	pieces per pallet	pallet weight (approximate) kg	pallet weight (approximate) lbs
1094015	**CM61**	100	8.0	17.9	5,000	400	895

Dimensions shown in (millimetres) and inches.

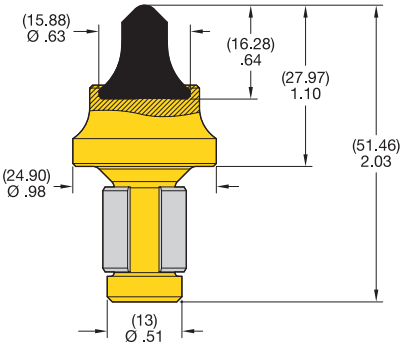

CM51

order number	catalogue number	block	retainer
4080539	CM51	CMB5 BLOCK	LR51 RETAINER

NOTE: Conical includes retainer.
Block and additional retainers sold separately.

Packaging Information

order number	catalogue number	pieces per container	container weight (approximate) kg	container weight (approximate) lbs	pieces per pallet	pallet weight (approximate) kg	pallet weight (approximate) lbs
4080539	CM51	200	16.0	34.0	10,000	800	1700

Dimensions shown in (millimetres) and inches.

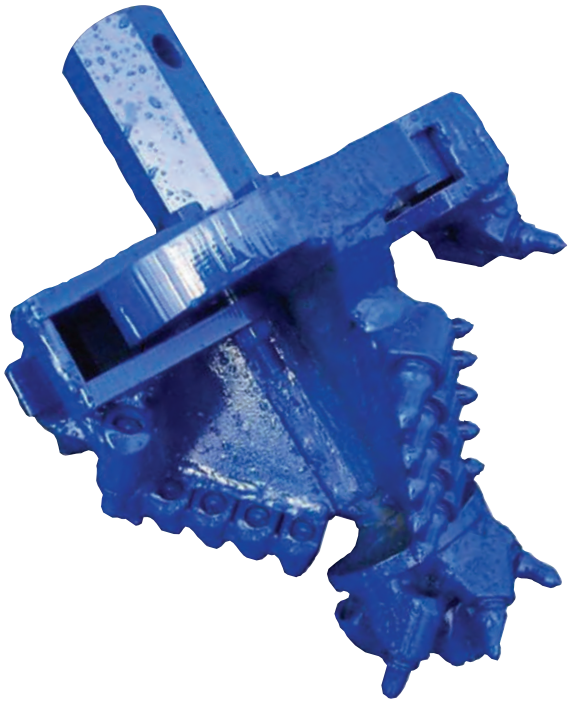

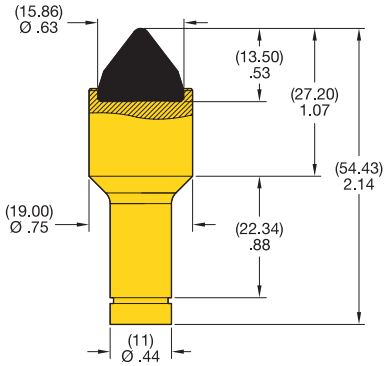

CM42

order number	catalogue number	block	retainer
1010778	**CM42**	**CMB4 BLOCK**	**CM4 RETAINER**

NOTE: Conical includes retainer.
Block and additional retainers sold separately.

11mm–14mm Shank Blocks

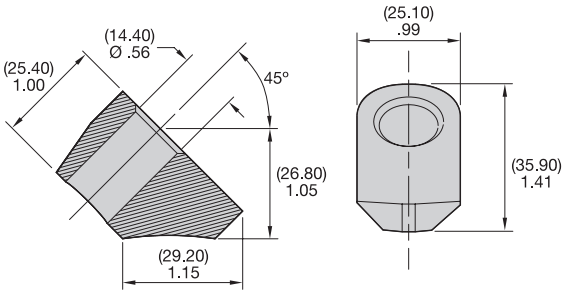

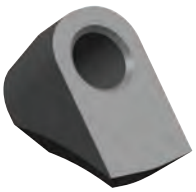

CMB6-L

order number	catalogue number
1898353	**CMB6-L**

Packaging Information

order number	catalogue number	pieces per container	container weight (approximate) kg	container weight (approximate) lbs	pieces per pallet	pallet weight (approximate) kg	pallet weight (approximate) lbs
1010778	**CM42**	200	16.0	34.0	10,000	800	1700
1898353	**CMB6-L**	125	15.9	35.1	6250	795	1755

Dimensions shown in (millimetres) and inches.

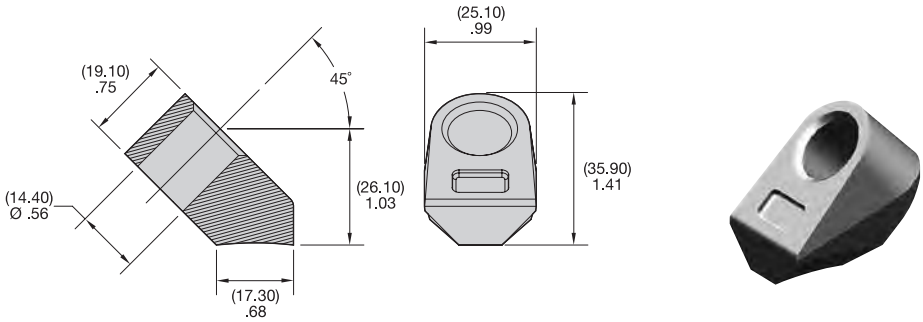

CMB6

order number	catalogue number
1321008	CMB6

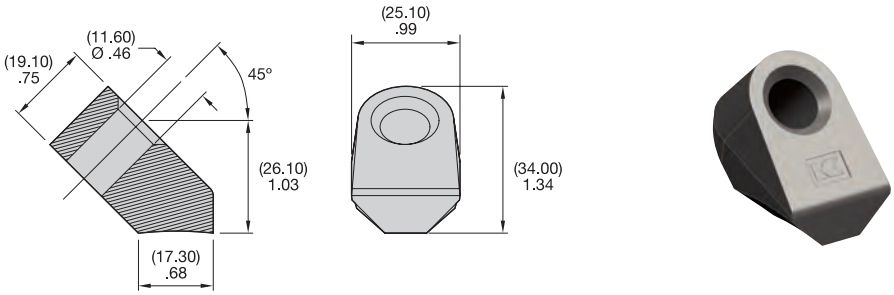

CMB4 BLOCK

order number	catalogue number
1012281	CMB4 BLOCK

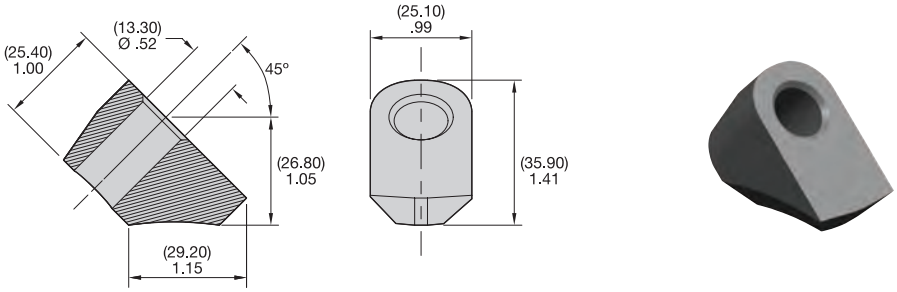

CMB5 BLOCK

order number	catalogue number
5031028	CMB5 BLOCK

Packaging Information

order number	catalogue number	pieces per container	container weight (approximate) kg	container weight (approximate) lbs	pieces per pallet	pallet weight (approximate) kg	pallet weight (approximate) lbs
1321008	CMB6	200	16.3	36	10000	815	1800
1012281	CMB4 BLOCK	200	18.1	40	10000	905	2000
5031028	CMB5 BLOCK	125	16.4	36.3	6250	820	1815

Dimensions shown in (millimetres) and inches.

CM6L RETAINER

order number	catalogue number
1595671	CM6L RETAINER

CM6H RETAINER

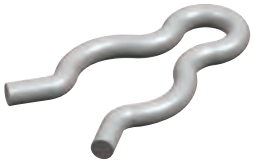

order number	catalogue number
1777806	CM6H RETAINER

CM4 RETAINER

order number	catalogue number
1012223	CM4 RETAINER

3/8 16UNC NUT

KENNAMETAL

KF Systems

Foundation Drilling Attachments: Core Barrel, Bucket, Auger, Wall Cutter, and Casing

The KF Series products cover a wide range of foundation drilling cutting solutions, including quick-change tools, wall cutters, welding bars and bits, and flat tools.

Auger

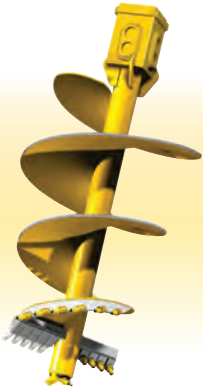

Casing

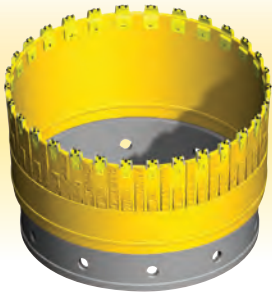

Core Barrel

Bucket

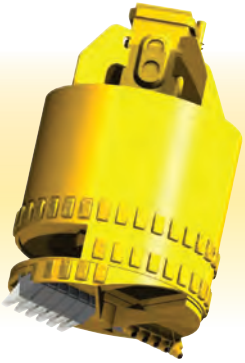

Wall Cutter

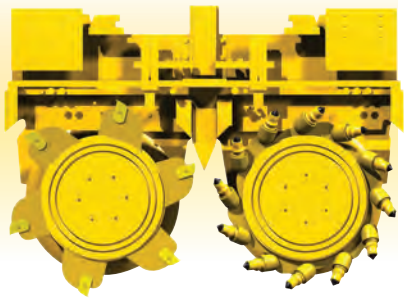

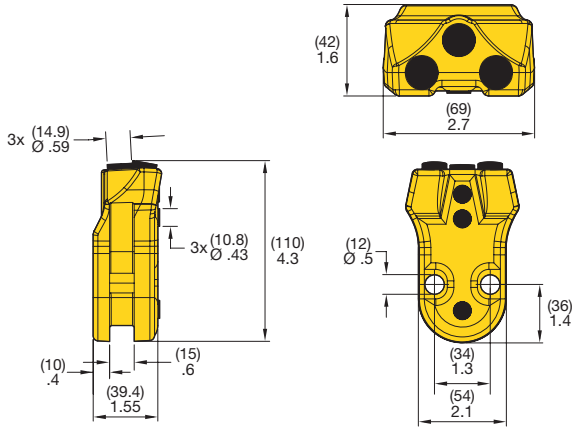

KFQ39H-6

order number	catalogue number
6000942	**KFQ39H-6**

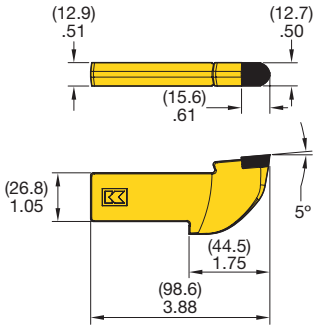

U7L/CU7L

order number	catalogue number
1011181	**U7L/CU7L**

Packaging Information

order number	catalogue number	pieces per container	container weight (approximate) kg	container weight (approximate) lbs	pieces per pallet	pallet weight (approximate) kg	pallet weight (approximate) lbs
6000942	**KFQ39H-6**	10	13.5	29.8	500	675	1488
1011181	**U7L/CU7L**	50	12.97	28.60	–	–	–

Dimensions shown in (millimetres) and inches.

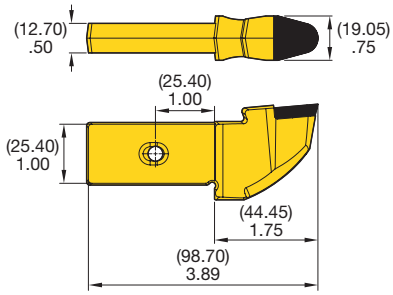

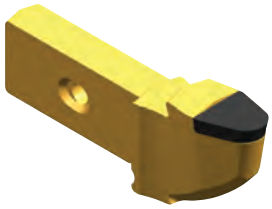

CJ2 FT

order number	catalogue number
1011207	**CJ2 FT**

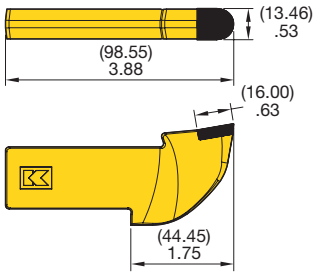

CU7/U7

order number	catalogue number
1011213	**CU7/U7**

Packaging Information

order number	catalogue number	pieces per container	container weight (approximate) kg	container weight (approximate) lbs	pieces per pallet	pallet weight (approximate) kg	pallet weight (approximate) lbs
1011207	**CJ2 FT**	50	14.85	32.75	–	–	–
1011213	**CU7/U7**	50	12.84	28.30	2500	641.83	1415

Dimensions shown in (millimetres) and inches.

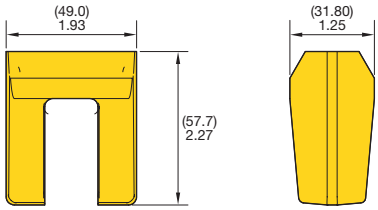

CJ2 H

order number	catalogue number
1012369	CJ2 H

Packaging Information

order number	catalogue number	pieces per container	container weight (approximate) kg	container weight (approximate) lbs	pieces per pallet	pallet weight (approximate) kg	pallet weight (approximate) lbs
1012369	CJ2 H	30	9.93	21.9	1500	496.6	1095

Dimensions shown in (millimetres) and inches.

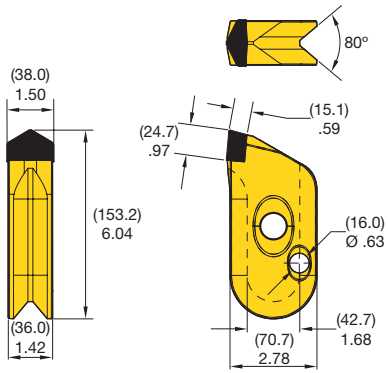

KFW38M

order number	catalogue number
5379519	**KFW38M**

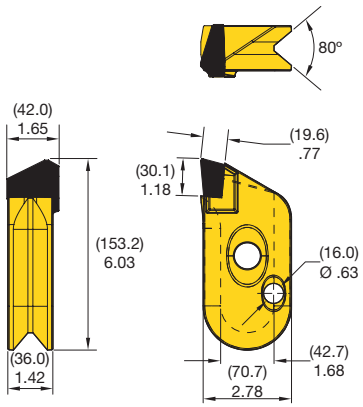

KFW42R

order number	catalogue number
5379521	**KFW42R**

Packaging Information

order number	catalogue number	pieces per container	container weight (approximate) kg	container weight (approximate) lbs	pieces per pallet	pallet weight (approximate) kg	pallet weight (approximate) lbs
5379519	**KFW38M**	5	10.2	22.2	250	507.5	1119
5379521	**KFW42R**	5	10.5	23.0	250	522.5	1152

Dimensions shown in (millimetres) and inches.

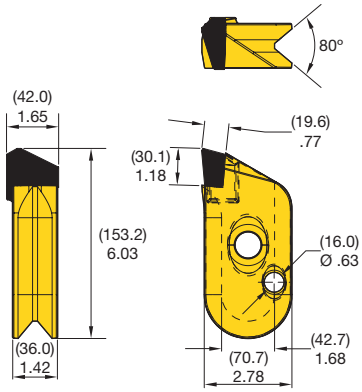

KFW42L

order number	catalogue number
5379522	**KFW42L**

Packaging Information

order number	catalogue number	pieces per container	container weight (approximate) kg	container weight (approximate) lbs	pieces per pallet	pallet weight (approximate) kg	pallet weight (approximate) lbs
5379522	**KFW42L**	5	10.5	23.0	250	522.5	1152

Dimensions shown in (millimetres) and inches.

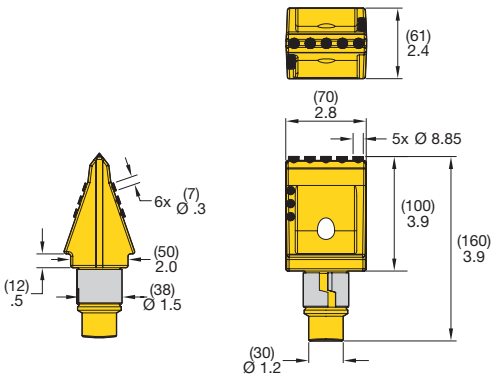

KFF70-11

order number	catalogue number
5984712	**KFF70-11**

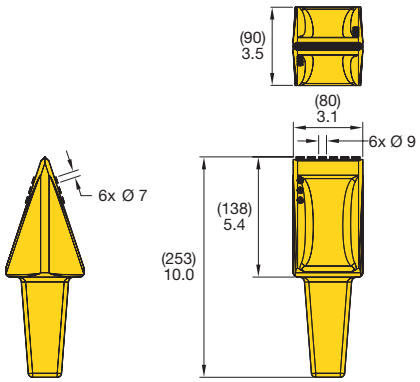

KFF80-12

order number	catalogue number
5622123	**KFF80-12**

Packaging Information

order number	catalogue number	pieces per container	container weight (approximate) kg	container weight (approximate) lbs	pieces per pallet	pallet weight (approximate) kg	pallet weight (approximate) lbs
5984712	**KFF70-11**	5	10.4	22.9	–	–	–
5622123	**KFF80-12**	2	10.4	22.9	–	–	–

Dimensions shown in (millimetres) and inches.

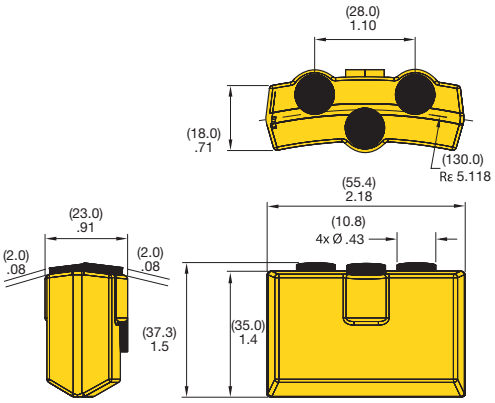

KFB23-4

order number	catalogue number
5622121	KFB23-4

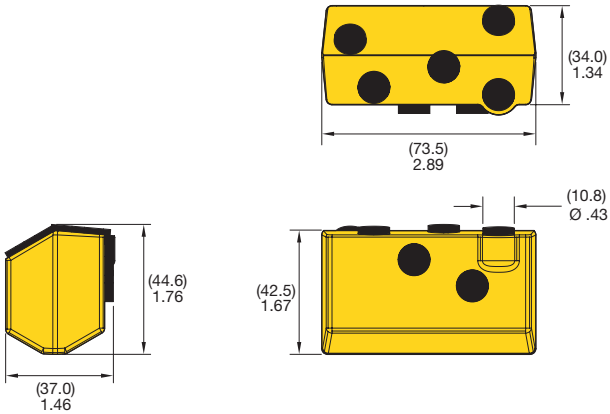

KFB37-7

order number	catalogue number
5379523	KFB37-7

Packaging Information

order number	catalogue number	pieces per container	container weight (approximate) kg	container weight (approximate) lbs	pieces per pallet	pallet weight (approximate) kg	pallet weight (approximate) lbs
5622121	KFB23-4	25	7.5	16.5	900	293	646
5379523	KFB37-7	20	15.4	34	720	580.5	1280

Dimensions shown in (millimetres) and inches.

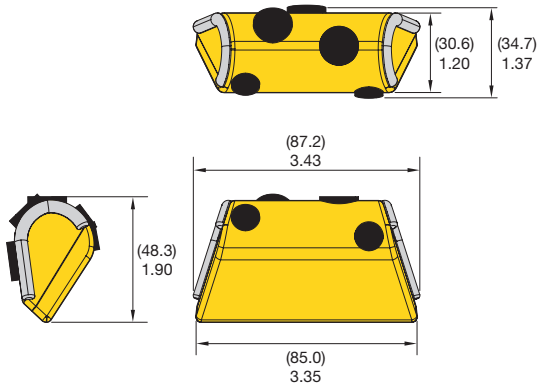

KFB35-5

order number	catalogue number
5379527	**KFB35-5**

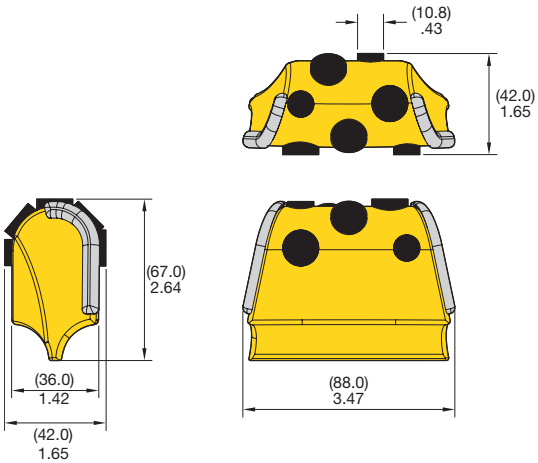

KFB42-7

order number	catalogue number
5379525	**KFB42-7**

Packaging Information

order number	catalogue number	pieces per container	container weight (approximate) kg	container weight (approximate) lbs	pieces per pallet	pallet weight (approximate) kg	pallet weight (approximate) lbs
5379527	**KFB35-5**	25	16	35.3	900	595.1	1312
5379525	**KFB42-7**	15	16.8	37.0	540	626	1380

Dimensions shown in (millimetres) and inches.

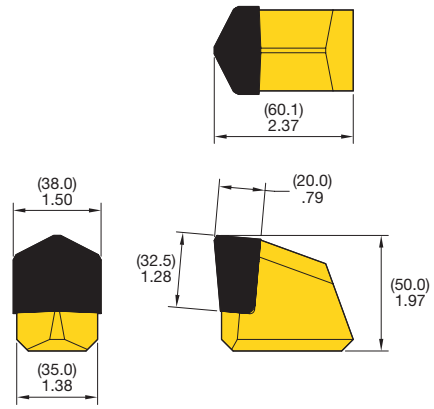

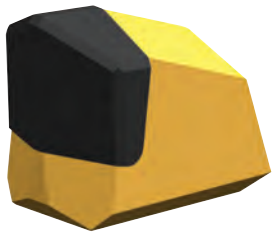

KFT38

order number	catalogue number
5379530	KFT38

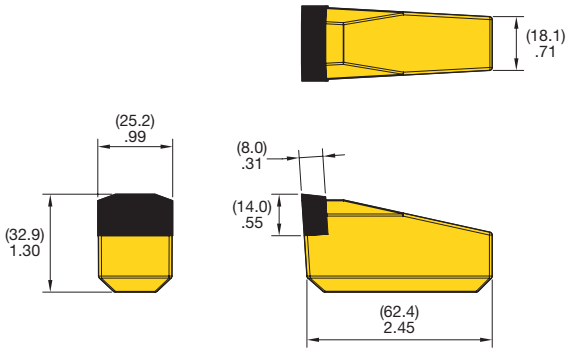

KFT25

order number	catalogue number
5379531	KFT25

Packaging Information

order number	catalogue number	pieces per container	container weight (approximate) kg	container weight (approximate) lbs	pieces per pallet	pallet weight (approximate) kg	pallet weight (approximate) lbs
5379530	KFT38	15	9.4	20.8	540	372	820
5379531	KFT25	50	14.5	31.9	1800	571.5	1260

Dimensions shown in (millimetres) and inches.

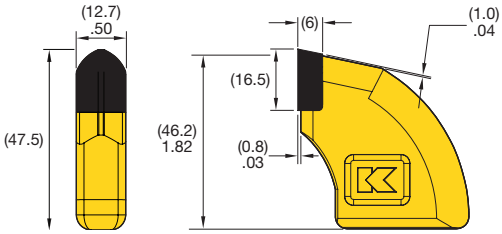

DT50

order number	catalogue number
1086101	**DT50**

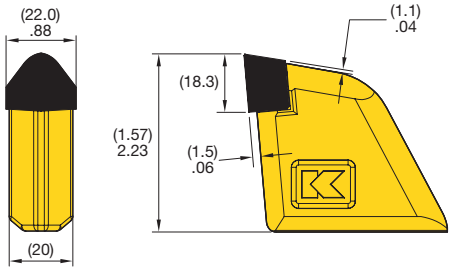

DT87

order number	catalogue number
1086378	**DT87**

Packaging Information

order number	catalogue number	pieces per container	container weight (approximate) kg	container weight (approximate) lbs	pieces per pallet	pallet weight (approximate) kg	pallet weight (approximate) lbs
1086101	**DT50**	125	16.2	35.7	6250	784.7	1730
1086378	**DT87**	50	17	37.4	2500	836.8	1845

Dimensions shown in (millimetres) and inches.

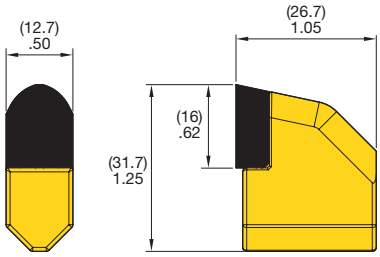

RT1

order number	catalogue number
1784646	**RT1**

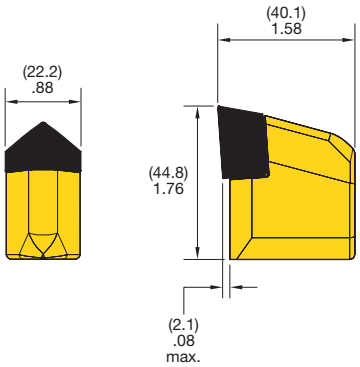

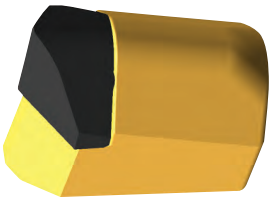

RT2

order number	catalogue number
1844257	**RT2**

Packaging Information

order number	catalogue number	pieces per container	container weight (approximate) kg	container weight (approximate) lbs	pieces per pallet	pallet weight (approximate) kg	pallet weight (approximate) lbs
1784646	**RT1**	200	14.2	31.2	10000	739.3	1630
1844257	**RT2**	80	16.7	36.8	4000	866.3	1910

Dimensions shown in (millimetres) and inches.

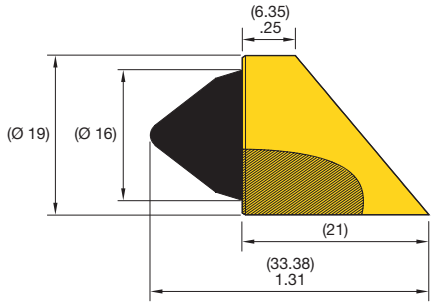

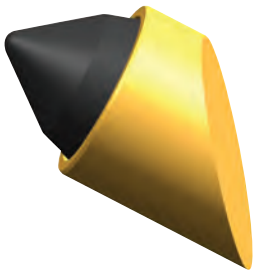

BR1

order number	catalogue number
1800063	**BR1**

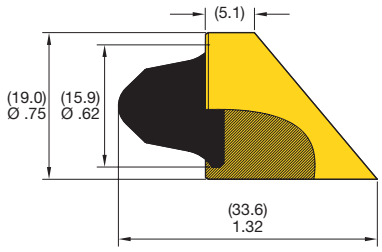

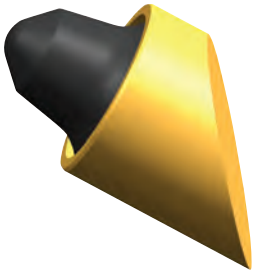

BR2

order number	catalogue number
1858633	**BR2**

Packaging Information

order number	catalogue number	pieces per container	container weight (approximate) kg	container weight (approximate) lbs	pieces per pallet	pallet weight (approximate) kg	pallet weight (approximate) lbs
1800063	**BR1**	300	15.0	33.0	15000	780.1	1720
1858633	**BR2**	300	13.7	30.3	15000	718.9	1585

Dimensions shown in (millimetres) and inches.

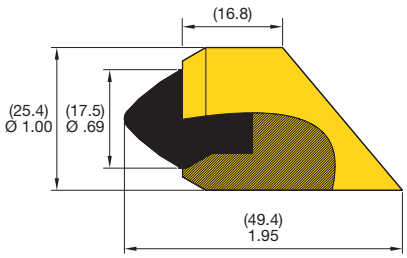

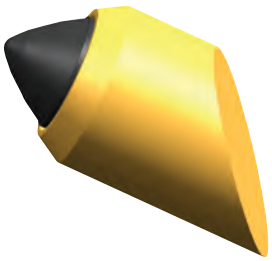

BR3

order number	catalogue number
1858622	BR3

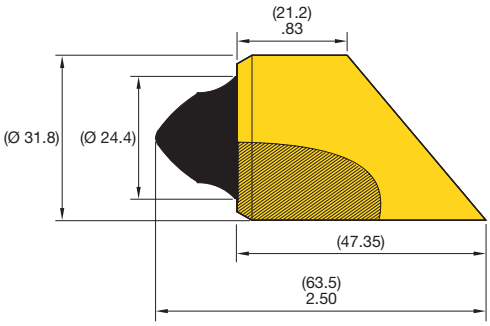

BR4

order number	catalogue number
1858634	BR4

Packaging Information

order number	catalogue number	pieces per container	container weight (approximate) kg	container weight (approximate) lbs	pieces per pallet	pallet weight (approximate) kg	pallet weight (approximate) lbs
1858622	BR3	125	17.0	37.5	6250	882.2	1945
1858634	BR4	80	21.1	46.5	4000	1055	2325

Dimensions shown in (millimetres) and inches.

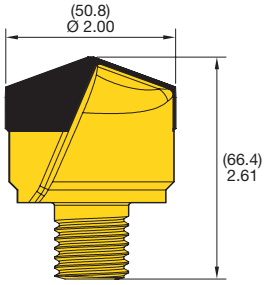

CP15 7/8-9 UNC

order number	catalogue number
1324059	CP15 7/8-9 UNC

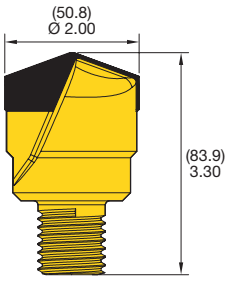

CP16 1-8 UNC

order number	catalogue number
1012300	CP16 1-8 UNC

Packaging Information

order number	catalogue number	pieces per container	container weight (approximate) kg	container weight (approximate) lbs	pieces per pallet	pallet weight (approximate) kg	pallet weight (approximate) lbs
1324059	CP15 7/8-9 UNC	20	9.8	21.6	1000	489.9	1150
1012300	CP16 1-8 UNC	20	13.0	28.6	1000	648.6	1500

Dimensions shown in (millimetres) and inches.

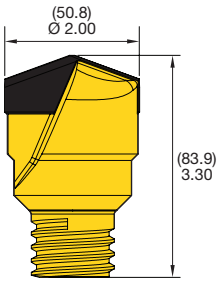

CP18 1.1/4-5 ACME

order number	catalogue number
1012304	CP18 1.1/4-5 ACME

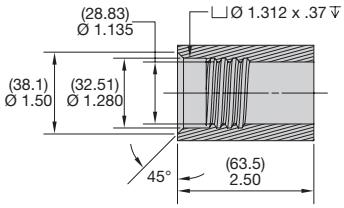

CP18 HOLDER

order number	catalogue number
1012287	CP18 HOLDER

Packaging Information

order number	catalogue number	pieces per container	container weight (approximate) kg	container weight (approximate) lbs	pieces per pallet	pallet weight (approximate) kg	pallet weight (approximate) lbs
1012304	CP18 1.1/4-5 ACME	20	14.2	31.4	1000	712.1	1570
1012287	CP18 HOLDER	20	8.0	17.6	1000	430.9	950

Dimensions shown in (millimetres) and inches.

Wear Solutions

Kennametal develops **Engineered Solutions** because we know that every customer has unique requirements that can't accept a "one-size-fits-all" solution. By working directly with customers, we utilise in-house expertise and capabilities to provide custom, finished solutions quickly.

Weight Reduction can be critical in reducing overall costs. Excess weight translates into higher costs in tires, fuel, and maintenance. By employing advanced material solutions, Kennametal can improve the life of your equipment while reducing weight — saving you valuable time and money.

100% Safe Is Kennametal's Goal. Anytime there is a shutdown for maintenance, the risk for safety issues increases. By utilising Kennametal solutions to extend tool life, we assist in improving safety conditions: less welding, less movement of materials, and less of a need for scaffolding to replace worn-out liners means a safer work environment.

Consider **Price vs. Cost.** Many customers reference "cost per pound or kilo" as a method to measure costs. However, many do not consider the overall cost of the product:

- Downtime for maintenance to repair and replace tools results in lost production.
- Producing and managing Drop Management, if buying plate, adds time to the process.

Extended Uptime is an excellent measurement of value. Our goal is to keep you up and running, because more uptime means:

- Equipment running, generating profits.
- Reduced risks for safety issues.
- Employees are hard at work, rather than concentrating on maintenance issues.

Protect Your Foundation Drilling Attachments with Maximum-Duty Kennametal KenCast™

Your Foundation Drilling attachments run in the toughest conditions. Protect them with Kennametal KenCast™, a composite material that combines the exceptional wear resistance of Kennametal cemented tungsten carbide with the toughness and practicality of air-hardened steel. KenCast comes in a variety of standard sizes, is easily welded to your equipment, and is more breakage-resistant than brazed carbide tiles.

Add KenCast to increase equipment life:

Saws:

- Side of wheel
- Bolt-on segment

Foundation Drilling:

- Side of base plates
- Paddles on base plates or drums

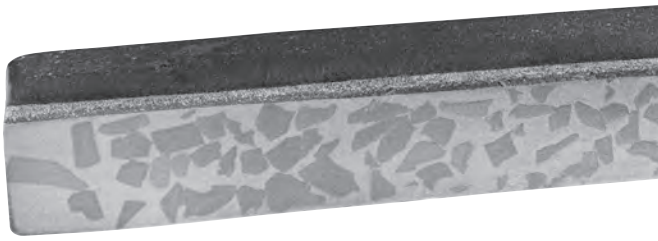

For more information, please contact your Kennametal Sales Engineer or visit kennametal.com/kencast.

Alleviate Cost and Downtime with Our Exclusive KenCast Base Plate

- Weldable steel is suitable for covering large areas.
- Carbide content provides longer life and higher impact durability than other forms of carbide.
- Protects blocks, saves downtime, and prolongs life when used on:
  - Sides of base plates on chain trenchers
  - Sides of segments on rock wheels
  - Clean-out paddles on terrain levelers, road miners, and surface miners

Keep up and running longer!

Order No.	Catalogue No.	Page(s)
1010302	C24 K3055	55
1010734	C 3T K3560	43
1010748	C21 K3560	52
1010758	C23 K3560	55
1010761	C4 K3560	14
1010767	RL08 K3560	40
1010770	RL09 K3560	41
1010772	RL11 K3560	42
1010776	C4 1 K3560	14
1010778	CM42 K3560	64
1010782	RL07 K3560	40
1010784	RL10 K3560	41
1010789	C21HD K3560	52
1010795	SL04 K3560	32
1010797	SL02 K3560	33
1010804	C21RHD K3560	54
1010815	SM06 K3560	29
1010817	SM02 K3560	28
1010910	C3R K3560	43
1011181	U7L/CU7L K3060	69
1011207	CJ2 FT K3060	70
1011213	CU7/U7 K3060	70
1011578	C4B	15
1011884	3/4 16UNF NUT	48
1011935	LR87 RETAINER	7
1011942	LR76 RETAINER	7
1011961	C21R RETAINER	7, 57
1011965	C10 RETAINER	7
1011973	U40 RETAINER	7
1011978	U43K	7
1011982	C30HP/U40HP BIT PULLER ASSEM	7, 24
1011984	C20/U43HP BIT PULLER ASSEM	7, 57
1012016	C123/U50 HAMMER PULLER	7, 36, 48
1012047	KRP4 PLIER	7, 16
1012120	C3R RETAINER	7, 48
1012223	CM4 RETAINER	66
1012247	KHP2 KMTL PUNCH	7, 16, 24, 36
1012273	C20	56
1012275	C87B	34
1012278	C10 BLOCK	47
1012279	C30	23
1012280	C10H	46
1012281	CMB4 BLOCK	65
1012287	CP18 HOLDER	83
1012300	CP16 1-8 UNC K3060	82
1012304	CP18 1.1/4-5 ACME K3060	48, 83
1012348	C21R REMOVER TOOL W/ GRIP	7, 36, 48, 57
1012369	CJ2 H	71
1086101	DT50 K3060	78
1086378	DT87 K3560	78
1094015	CM61 K3055	62
1107032	RS18 K3560	45
1132122	C30-G	23
1156102	RS16 K3560	44
1156107	RS17 K3560	44
1317495	SM04 K706	28
1321008	CMB6	65
1324059	CP15 7/8-9 UNC K3060	82
1595671	CM6L RETAINER	66
1777806	CM6H RETAINER	66
1780648	C21RFHD K3560	54
1784646	RT1 K3060	79
1795208	CM63 K706	60
1800063	BR1 K3560	80
1809484	SL07 K3560	32
1817888	SLR RETAINING RING	7, 36
1844257	RT2 K3560	79
1858587	SLB01 - G	35
1858622	BR3 K3560	81
1858633	BR2 K706	80
1858634	BR4 K3560	81
1876905	CM65 K706	60
1880696	DS01 K3560	11
1886760	C3RB BLOCK	47
1898353	CMB6-L	64
1918736	DS04 K3560MH	11
1918738	DS05 X K3560MH	12
2878292	DS05-59 X K3560	13
3043352	K150 PAD COATED PULLER	7, 16
3043394	U70 PAD COATED PULLER	7, 24
3663476	SM08 K3560MH	31
3882341	DS PULLER	7, 16
4055765	KR-112 BE RETAINER	7, 16
4065385	TR1-D RETAINER	24
4080539	CM51 K706	63
4131992	DSLR 1070 RETAINER CLIP	7
4143706	SM09 K3560	30
4161113	DS05NB X K3560MH	12
5031028	CMB5 BLOCK	65
5169340	C21F HD K3560	53
5379519	KFW38M	72
5379521	KFW42R	72
5379522	KFW42L	73
5379523	KFB37-7	75
5379525	KFB42-7	76
5379527	KFB35-5	76
5379530	KFT38	77
5379531	KFT25	77
5380221	DS102DR X K3560	10
5500279	UNIVERSAL TR3 PULLER	24
5515288	CM69T K357G	61
5598260	DS105DR X K3560	10
5601762	DS3830H	15
5619993	FD25-12.5-X K3560	21
5619994	FD25-14-X K3560	21
5619997	FD25W-19-X K3560	22
5619998	FD25W-17.5-X K3560	22
5622121	KFB23-4	75
5622123	KFF80-12	74
5984712	KFF70-11	74
6000942	KFQ39H-6	69
6012114	C20FD BLOCK	56
6012115	C10FD BLOCK	46
6012116	C87FD BLOCK	34
6153849	DS-59 HAMMER	7, 16

Catalogue No.	Page(s)
3/4 16UNF NUT	48
BR1 K3560	80
BR2 K706	80
BR3 K3560	81
BR4 K3560	81
C 3T K3560	43
C10 BLOCK	47
C10 RETAINER	7
C10FD BLOCK	46
C10H	46
C123/U50 HAMMER PULLER	7, 36, 48
C20	56
C20/U43HP BIT PULLER ASSEM	7, 57
C20FD BLOCK	56
C21 K3560	52
C21F HD K3560	53
C21HD K3560	52
C21R REMOVER TOOL W/ GRIP	7, 36, 48, 57
C21R RETAINER	7, 57
C21RFHD K3560	54
C21RHD K3560	54
C23 K3560	55
C24 K3055	55
C30	23
C30-G	23
C30HP/U40HP BIT PULLER ASSEM	7, 24
C3R K3560	43
C3R RETAINER	7, 48
C3RB BLOCK	47
C4 1 K3560	14
C4 K3560	14
C4B	15
C87B	34
C87FD BLOCK	34
CJ2 FT K3060	70
CJ2 H	71
CM4 RETAINER	66
CM42 K3560	64
CM51 K706	63
CM61 K3055	62
CM63 K706	60
CM65 K706	60
CM69T K357G	61
CM6H RETAINER	66
CM6L RETAINER	66
CMB4 BLOCK	65
CMB5 BLOCK	65
CMB6	65

Catalogue No.	Page(s)
CMB6-L	64
CP15 7/8-9 UNC K3060	82
CP16 1-8 UNC K3060	82
CP18 1.1/4-5 ACME K3060	48, 83
CP18 HOLDER	83
CU7/U7 K3060	70
DS PULLER	7, 16
DS-59 HAMMER	7, 16
DS01 K3560	11
DS04 K3560MH	11
DS05 X K3560MH	12
DS05-59 X K3560	13
DS05NB X K3560MH	12
DS102DR X K3560	10
DS105DR X K3560	10
DS3830H	15
DSLR 1070 RETAINER CLIP	7
DT50 K3060	78
DT87 K3560	78
FD25-12.5-X K3560	21
FD25-14-X K3560	21
FD25W-17.5-X K3560	22
FD25W-19-X K3560	22
K150 PAD COATED PULLER	7, 16
KFB23-4	75
KFB35-5	76
KFB37-7	75
KFB42-7	76
KFF70-11	74
KFF80-12	74
KFQ39H-6	69
KFT25	77
KFT38	77
KFW38M	72
KFW42L	73
KFW42R	72
KHP2 KMTL PUNCH	7, 16, 24, 36
KR-112 BE RETAINER	7, 16
KRP4 PLIER	7, 16
LR76 RETAINER	7
LR87 RETAINER	7
RL07 K3560	40
RL08 K3560	40
RL09 K3560	41
RL10 K3560	41
RL11 K3560	42
RS16 K3560	44
RS17 K3560	44

Catalogue No.	Page(s)
RS18 K3560	45
RT1 K3060	79
RT2 K3560	79
SL02 K3560	33
SL04 K3560	32
SL07 K3560	32
SLB01 - G	35
SLR RETAINING RING	7, 36
SM02 K3560	28
SM04 K706	28
SM06 K3560	29
SM08 K3560MH	31
SM09 K3560	30
TR1-D RETAINER	24
U40 RETAINER	7
U43K	7
U70 PAD COATED PULLER	7, 24
U7L/CU7L K3060	69
UNIVERSAL TR3 PULLER	24

Kennametal, the stylised K, and KenCast are trademarks of Kennametal Inc. and are used as such herein. The absence of a product, service name, or logo from this list does not constitute a waiver of Kennametal's trademark or other intellectual property rights concerning that name or logo.

©Copyright 2021 by Kennametal Inc., Latrobe, PA 15650. All rights reserved.

Argentina
Phone: +54 11 4719 0700
Fax: +54 11 4719 6116

Australia/New Zealand
Phone: +61 7 3801 5844
Fax: +61 7 3801 5826
k-sydn.service@kennametal.com

Brazil/Latin America
Phone: +55 19 3936 9200
Fax: +55 19 3936 9201
bra.marketing@kennametal.com

Chile
Phone: +56 2 2641177
Fax: 001 888 442 4964

China
Phone: +86 400 650 1388
Fax: +86 10 8561 5263
k-cn-earthwork.service@kennametal.com

Germany/European Served Area
Phone: +49 6172 737 498
Fax: +49 6172 737 42 453
mcs-ag.service@kennametal.com

India
Phone: +91 800 22198444
Phone: +91 080 43281444
Fax: 91 80 2839 1300
bangalore.information@kennametal.com

Japan
Phone: +81 3 3820 2855
Fax: +81 3 3820 2800
k-jp.service@kennametal.com

Korea
Phone: +82 2 2109 6100
Fax: +82 2 2109 6981

Malaysia
Phone: 6 03 5569 9080
Fax: 6 03 5569 0080

Poland/Slovakia/Baltics
Phone: +48 61 665 6520
Fax: +48 61 665 6521
zory.orders@kennametal.com

South Africa/Sub Saharan Area
Phone: +27 11397 3540
Fax: +27 11397 3222

Singapore/Vietnam/ Philippines/Indonesia
Phone: +65 6265 9222
Fax: +65 6861 0922
k-sg.sales@kennametal.com

Thailand
Phone: +66 2642 3455
Fax: +66 2641 2736 8

United States/Canada/Mexico
Phone: 800 458 3608
Fax: 800 521 3319
mcs-na.service@kennametal.com

WORLD HEADQUARTERS
Kennametal Inc.
525 William Penn Place, Suite 3300
Pittsburgh, PA 15219
USA
Tel: 1 833 379 1506
k-corp-Infra.InsideSales@kennametal.com

EUROPE
Kennametal Infrastructure GmbH
Eckersdorfer Strasse 10
95490 Mistelgau
Germany
Tel: +49 9279 80500
k-mstl.service@kennametal.com

ASIA PACIFIC – INDIA
Kennametal India Limited
8/9Th Mile, Tumkur Road
Bangalore, Karnataka 560073
India
k-in-infra.sales@kennametal.com

ASIA PACIFIC – CHINA
Kennametal Asia (China) Management Co., Ltd.
No. 750, Jin Yu Road
JinQiao Export Processing Zone
Pudong, Shanghai 201206
China
Tel: +86 400 889 2135

ASIA PACIFIC – OUTSIDE CHINA AND INDIA
Kennametal (Singapore) Pte Ltd.
ICON@IBP #01-02/03/05
3A International Business Park,
Singapore 609935
k-sg-sales@kennametal.com

Kennametal Inc.
1600 Technology Way
Latrobe, PA 15650
USA

kennametal.com

©2021 Kennametal Inc. I All rights reserved. I B-21-06517