PE2500-2

Standard Alternator

Overview

Voltage, Frequency		Prime	Standby
415/240 V, 50 Hz	kVA	2250.0	2500.0
	kW	1800.0	2000.0
Power Factor		0.8	
Length	mm	6038 (237.7)	
Width	mm	2184 (86.0)	
Height	mm	3325 (130.9)	
Weight (Dry)	kg	13752 (30317.9)	
Weight (Wet)	kg	14218 (31345.3)	
Base Frame		SKIDA	
Enclosure		No Enclosure	



Image for illustration purposes only

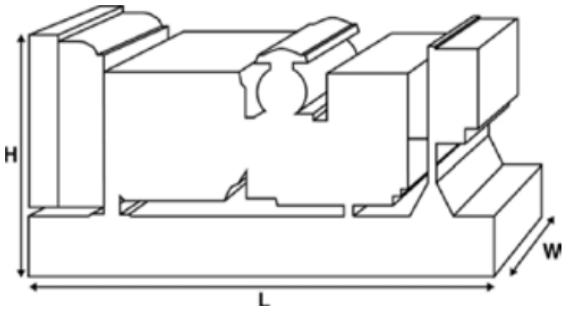

Ratings at 0.8 power factor.
Please refer to the output ratings technical data section for specific generator set outputs per voltage.

Ratings in accordance with ISO 8528, ISO 3046, IEC 60034, BS5000 and NEMA MG-1.22.
Generator set pictured may include optional accessories.

Prime Rating

These ratings are applicable for supplying continuous electrical power (at variable load) in lieu of commercially purchased power. There is no limitation to the annual hours of operation and this model can supply 10% overload power for 1 hour in 12 hours.

Standby Rating

These ratings are applicable for supplying continuous electrical power (at variable load) in the event of a utility power failure. No overload is permitted on these ratings. The alternator on this model is peak continuous rated (as defined in ISO 8528-3).

Standard Reference Conditions

Note: Standard reference conditions 25°C (77°F) Air Inlet Temp, 100m (328 ft) A.S.L. 30% relative humidity. Fuel consumption data at full load with diesel fuel with specific gravity of 0.85 and conforming to BS2869. 1998, Class A2.
FG Wilson offer a range of optional features to allow you to tailor our generator sets to meet your power needs. Options available include:

- Upgrade to CE Certification
- A wide range of Sound Attenuated Enclosures
- A variety of generator set control and synchronising panels
- Additional alarms and shutdowns
- A selection of exhaust silencer noise levels

PE2500-2

For further information on all of the standard and optional features accompanying this product please contact your local Dealer or visit : www.fgwilson.com

Ratings and Performance Data

Engine Make		Perkins
Engine Model		5016AC-E61TRG3
Alternator Make		Leroy Somer
Alternator Model		LL9324P
Control Panel		DSE7410
Base Frame		SKIDA
Circuit Breaker Type		Options Available
Frequency	Hz	50
Engine Speed	rpm	1500
Fuel Tank Capacity	litres (US gal)	- (-)
Fuel Consumption Prime	litres (US gal)/hr	482.0 (127.3)
Fuel Consumption Standby	litres (US gal)/hr	533.0 (140.8)

Engine Technical Data

No. of Cylinders		16
Alignment		VEE
Cycle		4 STROKE
Bore	mm (in)	160 (6.3)
Stroke	mm (in)	190 (7.5)
Induction		TURBOCHARGED AIR TO WATER CHARGE COOLED
Cooling Method		WATER
Governing Type		ELECTRONIC
Governing Class		IS0 8528 G3
Compression Ratio		13.8:1
Displacement	L (cu. in)	61.1 (3728.6)
Moment of Inertia	kg m^2 (lb/in^2)	20.38 (69641)
Voltage		24
Ground		Negative
Battery Charger Amps		5
Engine Weight Dry	kg (lb)	5870 (12941)
Engine Weight Wet	kg (lb)	6159 (13578)

PE2500-2

Engine Performance Data

Engine Speed	rpm	1500
Gross Engine Power Prime	kW (hp)	2008.0 (2693)
Gross Engine Power Standby	kW (hp)	2216.0 (2972)
BMEP Prime	kPa (psi)	2628 (381.2)
BMEP Standby	kPa (psi)	2901 (420.7)

Fuel System

Fuel Filter Type		Replaceable Element			
Recommended Fuel		Class A2 Diesel			
Fuel Consumption at		110 % Load	100 % Load	75 % Load	50 % Load
50 Hz Prime	l/hr (US gal/hr)	533.0 (140.8)	482.0 (127.3)	370.0 (97.7)	253.0 (66.8)
50 Hz Standby	l/hr (US gal/hr)	- (-)	533.0 (140.8)	- (-)	- (-)

(Based on diesel fuel with a specific gravity of 0.85 and conforming to BS2869, class A2)

Air System

Air Filter Type		Replaceable Element
Combustion Air Flow Prime	m³/min (cfm)	155.00 (5474)
Combustion Air Flow Standby	m³/min (cfm)	167.00 (5898)
Max. Combustion Air Intake Restriction	kPA	3.80 (15.3)

Cooling System

Cooling System Capacity	l (US gal)	434.0 (114.7)
Water Pump Type		Centrifugal
Heat Rejected to Water & Lube Oil: Prime	kW (Btu/min)	599.0 (34065)
Heat Rejected to Water & Lube Oil: Standby	kW (Btu/min)	656.0 (37306)
Heat Radiation to Room*: Prime	kW (Btu/min)	160.2 (9110.0)
Heat Radiation to Room*: Standby	kW (Btu/min)	180.8 (10282.0)
Radiator Fan Load	kW (hp)	133.00 (178.36)
Radiator Cooling Airflow	m³/min (cfm)	2622.0 (92595)
External Restriction to Cooling Airflow	Pa (in H2O)	250 (1.00)

*: Heat radiated from engine and alternator
Designed to operate in ambient conditions up to 50°C (122°F).
Contact your local FG Wilson Dealer for power ratings at specific site conditions.

PE2500-2

Lubrication System

Oil Filter Type		Spin-On, Full Flow
Total Oil Capacity	l (US gal)	213.0 (56.3)
Oil Pan Capacity	l (US gal)	193.0 (51.0)
Oil Type		API CI4 15W-40
Oil Cooling Method		WATER

Exhaust System

Maximum Allowable Back Pressure	kPa (in Hg)	10.0 (3.000)
Exhaust Gas Flow: Prime	m³/min (cfm)	408.000 (14408)
Exhaust Gas Flow: Standby	m³/min (cfm)	445.000 (15715)
Exhaust Gas Temperature: Prime	°C (°F)	488.0 (910.0)
Exhaust Gas Temperature: Standby	°C (°F)	499.0 (930.0)

Alternator Physical Data

No. of Bearings	1
Insulation Class	H
Winding Code	6S
Winding Pitch	2/3
Wires	6
Ingress Protection Rating	IP23
Excitation System	AREP
AVR Model	D510/D550

* dependant on voltage code selected

Alternator Operating Data

Overspeed	rpm	2250
Voltage Regulation: (Steady state)	%	+/- 0.5
Wave Form NEMA = TIF		50
Wave Form IEC = THF	%	2
Total Harmonic content LL/LN	%	3.5
Radio Interference		EN61000-6
Radiant Heat: 50 Hz	kW (Btu/min)	76.8 (4368.0)

PE2500-2

Alternator Performance Data

Short Circuit Capacity (%) **	300

Voltage Code	Motor Starting Capability* (kVA)	Reactances Xd	Reactances X'd	Reactances X"d
415/240V	8870	3.057	0.235	0.118
400/230V	8266	3.291	0.253	0.127
380/220V	7491	3.646	0.280	0.140

Reactances shown are applicable to prime ratings.

*Based on 30% voltage dip at 0.8 power factor.

**With optional independent excitation system (PMG / AUX winding)

Output Ratings

	Prime		Standby	
Voltage Code	kVA	kW	kVA	kW
415/240V	2250.0	1800.0	2500.0	2000.0
400/230V	2250.0	1800.0	2500.0	2000.0
380/220V	2250.0	1800.0	2500.0	2000.0

Documentation

Operation and maintenance manual including circuit wiring diagrams.

Generator Set Standards

The equipment meets the following standards: BS5000, ISO 8528, ISO 3046, IEC 60034, NEMA MG-1.22.

Caterpillar (NI) Limited is the manufacturer of FG Wilson brand diesel generating sets, and our facilities manufacture products in the following locations:
Brazil • China • India

With headquarters in Northern Ireland, FG Wilson products are distributed through a Global Dealer Network.To contact your local Sales Office, please visit the FG Wilson website at www.fgwilson.com.

In line with our policy of continuous product development, we reserve the right to change specification without notice.