777

Off-Highway Truck

Technical Specifications

Configurations and features may vary by region. Please consult your Cat® dealer for availability in your area.

Table of Contents

Specifications . . . 2

- Engine – Tier 4 Final/Stage V . . . 2
- Engine – Tier 2 Equivalent . . . 2
- Transmission . . . 2
- Final Drives . . . 2
- Brakes . . . 2
- Body Hoists . . . 2
- Capacity – Dual Slope – 100% Fill Factor . . . 3
- Capacity – X Body – 100% Fill Factor . . . 3
- Capacity – Coal Bodies – 100% Fill Factor . . . 3
- Weight Distributions – Approximate . . . 3
- Sound – Tier 4 Final/Stage V/Tier 2 Equivalent . . . 3
- Air Conditioning System . . . 3
- Suspension . . . 3
- Steering . . . 3
- Rollover Protective Structure /Falling Objects Protective Structure (ROPS /FOPS) . . . 3
- Tires . . . 3
- Service Refill Capacities . . . 3
- Weight/Payload Calculation – Tier 4 Final/Stage V . . . 4
- Weight/Payload Calculation – Tier 2 Equivalent . . . 6
- 10/10/20 Payload Management Policy for Optimal Machine Life . . . 8
- Dimensions . . . 9
- Retarding Performance – Tier 4 Final/Stage V . . . 10
- Retarding Performance – Tier 2 Equivalent . . . 13
- Gradeability/Speed/Rimpull – Tier 4 Final/Stage V . . . 16
- Gradeability/Speed/Rimpull – Tier 2 Equivalent . . . 17

Standard and Optional Equipment . . . 18

777 Environmental Declaration . . . 20

777 Off-Highway Truck Specifications

Engine – Tier 4 Final/Stage V

Engine Model	Cat® C32B	
Rated Speed	1,800 rpm	
Gross Power – SAE J1995:2014	765 kW	1,025 hp
Net Power – SAE J1349:2011, ISO 9249:2007	683 kW	916 hp
Engine Power – ISO 14396:2002	752 kW	1,008 hp
Net Torque Speed @ 1,200 rpm	5101 N·m	3,762 lb-ft
Net Torque Rise	36%	
Cylinders	12	
Bore	145 mm	5.7 in
Stroke	162 mm	6.4 in
Displacement	32.1 L	1,959 in^3

- Net power available at the flywheel when the engine is equipped with fan, air cleaner, aftertreatment, and alternator with engine speed at 1,800 rpm.
- Power rating applies at 1,800 rpm when tested under the specified condition for the specified standard.
- Ratings based on SAE J1995 standard air conditions of 25°C (77°F) and 100 kPa (29.61 Hg) barometer. Power based on fuel having API gravity of 35 at 16°C (60°F) and an LHV of 42 780 kJ/kg (18,390 BTU/lb) when engine used at 30°C (86°F).
- No engine derating required up to 2286 m (7,500 ft).
- Meets U.S. EPA Tier 4 Final and EU Stage V emission standards.

Engine – Tier 2 Equivalent

Engine Model	Cat C32B	
Rated Speed	1,800 rpm	
Gross Power – SAE J1995:2014	765 kW	1,025 hp
Net Power – SAE J1349:2011, ISO 9249:2007, 80/1269/EEC	704 kW	945 hp
Engine Power – ISO 14396:2002	755 kW	1,012 hp
Net Torque Speed @ 1,200 rpm	5114 N·m	3,772 lbf-ft
Net Torque Rise	36%	
Cylinders	12	
Bore	145 mm	5.7 in
Stroke	162 mm	6.4 in
Displacement	32.1 L	1,959 in^3

- Net power available at the flywheel when the engine is equipped with fan, air cleaner, muffler, and alternator with engine speed at 1,800 rpm.
- Power rating applies at 1,800 rpm when tested under the specified condition for the specified standard.
- Ratings based on SAE J1995 standard air conditions of 25°C (77°F) and 100 kPa (29.61 Hg) barometer. Power based on fuel having API gravity of 35 at 16°C (60°F) and an LHV of 42 780 kJ/kg (18,390 BTU/lb) when engine used at 30° C (86°F).
- No engine derating required up to 4572 m (15,000 ft).
- Noncertified configuration that is equivalent to U.S. EPA Tier 2.

Transmission

Forward 1	10.9 km/h	6.8 mph
Forward 2	14.8 km/h	9.2 mph
Forward 3	20.1 km/h	12.5 mph
Forward 4	27.1 km/h	16.9 mph
Forward 5	36.8 km/h	22.9 mph
Forward 6	49.4 km/h	30.7 mph
Forward 7	67.1 km/h	41.7 mph
Reverse	12.0 km/h	7.5 mph

- Maximum travel speeds with standard 27.00R49 (E4) tires.

Final Drives

Differential Ratio	2.736:1
Planetary Ratio	7.0:1
Total Reduction Ratio	19.1576:1

Brakes

Brake Surface – Front	40 846 cm^2	6,331 in^2
Brake Surface – Rear	102 116 cm^2	15,828 in^2
Brake Standards	ISO 3450:2011	

Body Hoists

Pump Flow – High Idle	458 L/min	120.9 gal/min
Relief Valve Setting – Raise	18 950 kPa	2,750 psi
Relief Valve Setting – Lower	3450 kPa	500 psi
Body Raise Time – High Idle	15.0 seconds	
Body Lower Time – Float	13.0 seconds	
Body Lower Time – High Idle	13.0 seconds	

Capacity – Dual Slope – 100% Fill Factor

Struck	41.9 m^3	54.8 yd^3
Heaped (SAE 2:1)*	60.1 m^3	78.6 yd^3

- Contact your local Cat dealer for body recommendation.

* ISO 6483:1980.

Capacity – X Body – 100% Fill Factor

Struck	43.1 m^3	56.3 yd^3
Heaped (SAE 2:1)*	64.1 m^3	83.8 yd^3

- Contact your local Cat dealer for body recommendation.

* ISO 6483:1980.

Capacity – Coal Bodies – 100% Fill Factor

SAE 2:1 for use with material densities of 1160 kg/m^3 (1,950 lb/yd^3)	89.3 m^3	116.8 yd^3
SAE 2:1 for use with material densities of 1040-1160 kg/m^3 (1,750-1,950 lb/yd^3)	106 m^3	139 yd^3
SAE 2:1 for use with material densities of 950-1040 kg/m^3 (1,600-1,750 lb/yd^3)	110 m^3	144 yd^3
SAE 2:1 for use with material densities less than 950 kg/m^3 (1,600 lb/yd^3)	125.9 m^3	164.6 yd^3

Weight Distributions – Approximate

Front Axle – Empty	42%
Front Axle – Loaded	33%
Rear Axle – Empty	58%
Rear Axle – Loaded	67%

Sound – Tier 4 Final/Stage V/Tier 2 Equivalent

Operator Sound Pressure Level (ISO 6396:2008)	70 dB(A)
Machine Sound Pressure Level (ISO 6395:2008)	114.5 dB(A)

- The operator sound pressure level was measured according to ISO 6396:2008.The measurement was conducted at 70% of the maximum engine cooling fan speed.
- The machine sound power level was measured according to ISO 6395:2008.The measurement was conducted at 70% of the maximum engine cooling fan speed.
- Hearing protection may be needed when operating with an open operator station and cab (when not properly maintained or doors/windows open) for extended periods or in a noisy environment.

Air Conditioning System

- The air conditioning system on this machine contains the fluorinated greenhouse gas refrigerant R1234yf. Refer to the machine labeling for identification of the gas.
- If equipped with R1234yf (Global Warming Potential = 0.501), the system contains 1.85 kg (4.1 lb) of refrigerant which has a CO_2 equivalent of 0.001 metric tonnes (0.001 tons).

Suspension

Empty to Loaded cylinder stroke Front	74.7 mm	2.9 in
Empty to Loaded cylinder stroke Rear	66.0 mm	2.5 in
Rear Axle Oscillation	+/- 5.4°	

Steering

Steering Standards	ISO 5010:2019	
Steer Angle	30.5º	
Turning Diameter – Front	25.3 m	83 ft
Turning Circle Clearance Diameter	28.4 m	93 ft

Rollover Protective Structure/Falling Objects Protective Structure (ROPS/FOPS)

ROPS/FOPS Standards

- ROPS for cab offered by Caterpillar meets ISO 3471:2008 for operator and ISO 13459:2012 for trainer.
- Falling Objects Protective Structure (FOPS) meets ISO 3449:2005 Level II for operator and ISO 13459:2012 Level II for trainer.

Tires

Standard Tire	27.00R49 (E4)

- Productive capabilities of the 777 truck are such that, under certain job conditions, tonnes kilometer per hour/tons mile per hour (TKPH/TMPH) capabilities of standard or optional tires could be exceeded and, therefore, limit production.
- Caterpillar recommends the customer evaluate all job conditions and consult the tire manufacturer for proper tire selection.

Service Refill Capacities

Fuel Tank	1136.0 L 1325.0 L	300.0 gal 350.0 gal
Cooling System – Tier 4 Final	231.0 L	61.0 gal
Cooling System – Tier 2	219.0 L	57.9 gal
Crankcase	109.0 L	28.7 gal
Differentials	227.0 L	59.9 gal
Final Drives (each)	76.0 L	20.0 gal
Steering System (includes tank)	53.6 L	14.1 gal
Hoist and Brake Hydraulic System	444.0 L	117.0 gal
Front Wheels (each)	7.5 L	1.98 gal
Torque Converter/ Transmission System	138.5 L	36.5 gal

Weight/Payload Calculation – Tier 4 Final/Stage V

		X Body (Flat Floor)							
Machine Weights Based on Configuration		**Without Liner**		**With Liner**		**With HD Liner**		**With Rubber Liner**	
Base: Floor/Sidewall/Frontwall	mm (in)	**20/10/12 (0.79/0.39/0.47)**		**20/10/12 (0.79/0.39/0.47)**		**20/10/12 (0.79/0.39/0.47)**		**20/10/12 (0.79/0.39/0.47)**	
Liner: Floor/Sidewall/Frontwall	mm (in)			**12/10/16 (0.47/0.39/0.63)**		**16/10/10 (0.63/0.39/0.39)**		**102/10/10 (4.02/0.39/0.39)**	
Body Capacity	m^3 (yd^3)	64.1	(83.8)	63.5	(83.1)	63.3	(82.8)	60.9	(79.7)
Target Gross Machine Weight	kg (lb)	164 654	(363,000)	164 654	(363,000)	164 654	(363,000)	164 654	(363,000)
Empty Chassis Weight	kg (lb)	51 286	(113,066)	51 286	(113,066)	51 286	(113,066)	51 286	(113,066)
Body System Weight	kg (lb)	15 851	(34,945)	20 676	(45,583)	22 249	(49,051)	23 042	(50,800)
Empty Machine Weight	kg (lb)	67 137	(148,011)	71 962	(158,649)	73 535	(162,117)	74 328	(163,865)
Fuel Tank Size	L (gal)	1136	(300)	1136	(300)	1136	(300)	1136	(300)
Fuel Tank – 100% Fill	kg (lb)	955	(2,106)	955	(2,106)	955	(2,106)	955	(2,106)
Empty Machine Operating Weight	kg (lb)	68 092	(150,117)	72 917	(160,755)	74 490	(164,222)	75 283	(165,971)
Payload									
Target Payload (100%)*	kg (lb)	96 562	(212,883)	91 737	(202,245)	90 164	(198,778)	89 371	(197,029)
	tonnes (tons)	96.6	(106.4)	91.7	(101.1)	90.2	(99.4)	89.4	(98.5)
Maximum Payload (110% of Target)*	kg (lb)	106 218	(234,170)	100 911	(222,469)	99 180	(218,656)	98 308	(216,732)
	tonnes (tons)	106.2	(117.1)	100.9	(111.2)	99.2	(109.3)	98.3	(108.4)
Not to Exceed Payload (120% of Target)*	kg (lb)	115 874	(255,458)	110 084	(242,694)	108 197	(238,533)	107 245	(236,435)
	tonnes (tons)	115.9	(127.7)	110.1	(121.3)	108.2	(119.0)	107.2	(118.2)

*Refer to Caterpillar 10/10/20 Payload Policy.

Payload Calculation: Definitions

Target Payload = Target Gross Machine Weight less Empty Machine Operating Weight

Empty Machine Operating Weight = Empty Chassis Weight + Body System Weight + Fuel

Maximum Payload = Target Payload × 1.10 (110%)

Weight/Payload Calculation – Tier 4 Final/Stage V

		Dual Slope					
Machine Weights Based on Configuration		**Without Liner**		**With Liner**		**With Rubber Liner**	
Base: Floor/Sidewall/Frontwall	mm (in)	**20/10/12 (0.79/0.39/0.47)**		**20/10/12 (0.79/0.39/0.47)**		**20/10/12 (0.79/0.39/0.47)**	
Liner: Floor/Sidewall/Frontwall	mm (in)			**12/10/12 (0.47/0.39/0.47)**		**102/10/10 (4.02/0.39/0.39)**	
Body Capacity	m^3 (yd^3)	60.1	(78.6)	59.5	(77.8)	57.0	(74.6)
Target Gross Machine Weight	kg (lb)	164 654	(363,000)	164 654	(363,000)	164 654	(363,000)
Empty Chassis Weight	kg (lb)	51 286	(113,066)	51 286	(113,066)	51 286	(113,066)
Body System Weight	kg (lb)	16 075	(35,439)	21 770	(47,995)	23 017	(50,744)
Empty Machine Weight	kg (lb)	67 361	(148,506)	73 056	(161,061)	74 303	(163,810)
Fuel Tank Size	L (gal)	1136	(300)	1136	(300)	1136	(300)
Fuel Tank – 100% Fill	kg (lb)	955	(2,106)	955	(2,106)	955	(2,106)
Empty Machine Operating Weight	kg (lb)	68 316	(150,612)	74 011	(163,167)	75 258	(165,916)
Payload							
Target Payload (100%)*	kg (lb)	96 338	(212,388)	90 643	(199,833)	89 396	(197,084)
	tonnes (tons)	96.3	(106.2)	90.6	(99.9)	89.4	(98.5)
Maximum Payload (110% of Target)*	kg (lb)	105 972	(233,627)	99 707	(219,816)	98 336	(216,792)
	tonnes (tons)	106.0	(116.8)	99.7	(109.9)	98.3	(108.4)
Not to Exceed Payload (120% of Target)*	kg (lb)	115 606	(254,866)	108 772	(239,800)	107 275	(236,501)
	tonnes (tons)	115.6	(127.4)	108.8	(119.9)	107.3	(118.2)

*Refer to Caterpillar 10/10/20 Payload Policy.

Sideboards (optional)							
Height		**Volume Add**		**Weight**		**Maximum (110%) Material Density****	
mm	(in)	m^3	(yd^3)	kg	(lb)	kg	(lb)
152	(6)	4.1	(5.3)	976	(1,174)	1569	(2,656)
305	(12)	7.9	(10.3)	1513	(1,819)	1469	(2,497)
457	(18)	11.5	(15.1)	2003	(2,408)	1387	(2,361)
610	(24)	14.8	(19.3)	2568	(3,088)	1317	(2,251)
175	(6.9) (X body only)	5.1	(6.7)	852	(1,024)	1472	(2,490)

**All sideboards based on DS lined body. X body sideboard based on X body lined.

Empty Chassis Weight is figured without fuel.

Payload Calculation: Definitions

Target Payload = Target Gross Machine Weight less Empty Machine Operating Weight

Empty Machine Operating Weight = Empty Chassis Weight + Body System Weight + Fuel

Maximum Payload = Target Payload × 1.10 (110%)

Weight/Payload Calculation – Tier 2 Equivalent

		X Body (Flat Floor)							
Machine Weights Based on Configuration		**Without Liner**		**With Liner**		**With HD Liner**		**With Rubber Liner**	
Base: Floor/Sidewall/Frontwall	mm (in)	**20/10/12 (0.79/0.39/0.47)**		**20/10/12 (0.79/0.39/0.47)**		**20/10/12 (0.79/0.39/0.47)**		**20/10/12 (0.79/0.39/0.47)**	
Liner: Floor/Sidewall/Frontwall	mm (in)			**12/10/16 (0.47/0.39/0.63)**		**16/10/10 (0.63/0.39/0.39)**		**102/10/10 (4.02/0.39/0.39)**	
Body Volume	m^3 (yd^3)	64.1	(83.8)	63.5	(83.1)	63.3	(82.8)	60.9	(79.7)
Target Gross Machine Weight	kg (lb)	164 654	(363,000)	164 654	(363,000)	164 654	(363,000)	164 654	(363,000)
Empty Chassis Weight	kg (lb)	51 141	(112,747)	51 141	(112,747)	51 141	(112,747)	51 141	(112,747)
Body System Weight	kg (lb)	15 851	(34,945)	20 676	(45,583)	22 249	(49,050)	23 042	(50,800)
Empty Machine Weight	kg (lb)	66 992	(147,692)	71 817	(158,329)	73 390	(161,797)	74 183	(163,546)
Fuel Tank Size	L (gal)	1136	(300)	1136	(300)	1136	(300)	1136	(300)
Fuel Tank – 100% Fill	kg (lb)	955	(2,106)	955	(2,106)	955	(2,106)	955	(2,106)
Empty Operating Weight	kg (lb)	67 947	(149,797)	72 772	(160,435)	74 345	(163,903)	75 138	(165,651)
Payload									
Target Payload (100%)*	kg (lb)	96 707	(213,202)	91 882	(202,565)	90 309	(199,097)	89 516	(197,349)
	tonnes (tons)	96.7	(106.7)	91.9	(101.3)	90.3	(99.5)	89.5	(98.7)
Target Payload Material Density	kg/m^3 (lb/yd^3)	1676	(2,825)	1608	(2,710)	1578	(2,660)	1633	(2,753)
Maximum Working Payload (110%)*	kg (lb)	106 378	(234,523)	101 070	(222,821)	99 340	(219,007)	98 468	(217,085)
	tonnes (tons)	106.4	(117.3)	101.1	(111.4)	99.3	(109.5)	98.5	(108.6)
Maximum Working Payload Material Density	kg/m^3 (lb/yd^3)	1844	(3,108)	1769	(2,982)	1736	(2,926)	1797	(3,029)
Maximum Allowable Payload (120%)*	kg (lb)	116 048	(255,842)	110 258	(243,078)	108 371	(238,917)	107 419	(236,818)
	tonnes (tons)	116.0	(127.9)	110.2	(121.5)	108.4	(119.5)	107.4	(118.4)
Maximum Allowable Payload Material Density	kg/m^3 (lb/yd^3)	2012	(3,391)	1928	(3,250)	1893	(3,191)	1960	(3,304)

*Refer to Caterpillar 10/10/20 Payload Policy.

Weight/Payload Calculation – Tier 2 Equivalent

		Dual Slope					
Machine Weights Based on Configuration		**Without Liner**		**With Liner**		**With Rubber Liner**	
Base: Floor/Sidewall/Frontwall	mm (in)	**20/10/12 (0.79/0.39/0.47)**		**20/10/12 (0.79/0.39/0.47)**		**20/10/12 (0.79/0.39/0.47)**	
Liner: Floor/Sidewall/Frontwall	mm (in)			**12/10/12 (0.47/0.39/0.47)**		**102/10/10 (4.02/0.39/0.39)**	
Body Volume	m^3 (yd^3)	60.1	(78.6)	59.5	(77.8)	57.0	(74.6)
Target Gross Machine Weight	kg (lb)	164 654	(363,000)	164 654	(363,000)	164 654	(363,000)
Empty Chassis Weight	kg (lb)	51 141	(112,747)	51 141	(112,747)	51 141	(112,747)
Body System Weight	kg (lb)	16 075	(35,439)	21 770	(48,003)	23 017	(50,752)
Empty Machine Weight	kg (lb)	67 216	(148,186)	72 911	(160,741)	74 158	(163,490)
Fuel Tank Size	L (gal)	1136	(300)	1136	(300)	1136	(300)
Fuel Tank – 100% Fill	kg (lb)	955	(2,106)	955	(2,106)	955	(2,106)
Empty Operating Weight	kg (lb)	68 171	(150,291)	73 866	(162,847)	75 113	(165,596)
Payload							
Target Payload (100%)*	kg (lb)	96 483	(212,709)	90 788	(200,153)	89 541	(197,404)
	tonnes (tons)	96.5	(106.4)	90.8	(100.1)	89.5	(98.7)
Target Payload Material Density	kg/m^3 (lb/yd^3)	1784	(3,007)	1695	(2,857)	1745	(2,941)
Maximum Working Payload (110%)*	kg (lb)	106 131	(233,979)	99 867	(220,169)	98 495	(217,144)
	tonnes (tons)	106.1	(117.0)	99.9	(110.1)	98.4	(108.5)
Maximum Working Payload Material Density	kg/m^3 (lb/yd^3)	1962	(3,307)	1865	(3,144)	1920	(3,236)
Maximum Allowable Payload (120%)*	kg (lb)	115 780	(255,251)	108 946	(240,185)	107 449	(236,884)
	tonnes (tons)	115.8	(127.6)	108.9	(120.0)	107.3	(118.3)
Maximum Allowable Payload Material Density	kg/m^3 (lb/yd^3)	2141	(3,609)	2034	(3,428)	2095	(3,531)

*Refer to Caterpillar 10/10/20 Payload Policy.

Sideboards (optional)							
Height		**Volume Add**		**Weight**		**Maximum (110%) Material Density****	
mm	(in)	m^3	(yd^3)	kg	(lb)	kg	(lb)
152	(6)	4.1	(5.3)	976	(1,174)	1569	(2,656)
305	(12)	7.9	(10.3)	1513	(1,819)	1469	(2,497)
457	(18)	11.5	(15.1)	2003	(2,408)	1387	(2,361)
610	(24)	14.8	(19.3)	2568	(3,088)	1317	(2,251)
175	(6.9) (X body only)	5.1	(6.7)	852	(1,024)	1472	(2,490)

**All sideboards based on DS lined body. X body sideboard based on X body lined.

Empty Chassis Weight is figured without fuel.

Payload Calculation: Definitions
Empty Machine Weight = Empty Chassis Weight + Body System Weight
Target Payload = Target Gross Machine Weight less Empty Machine Weight
Maximum Payload = Target Payload x 1.10 (110%)

10/10/20 Payload Management Policy for Optimal Machine Life

The ideal hauling strategy that maximizes machine and machine component life is to *keep the* **mean** *of all payloads* **at or below the machine's rated target payload**.

- 90% of loads should fall into this range
- No more than 10% of loads should exceed 10% of the target payload
- No loads should be above 20% of the target payload

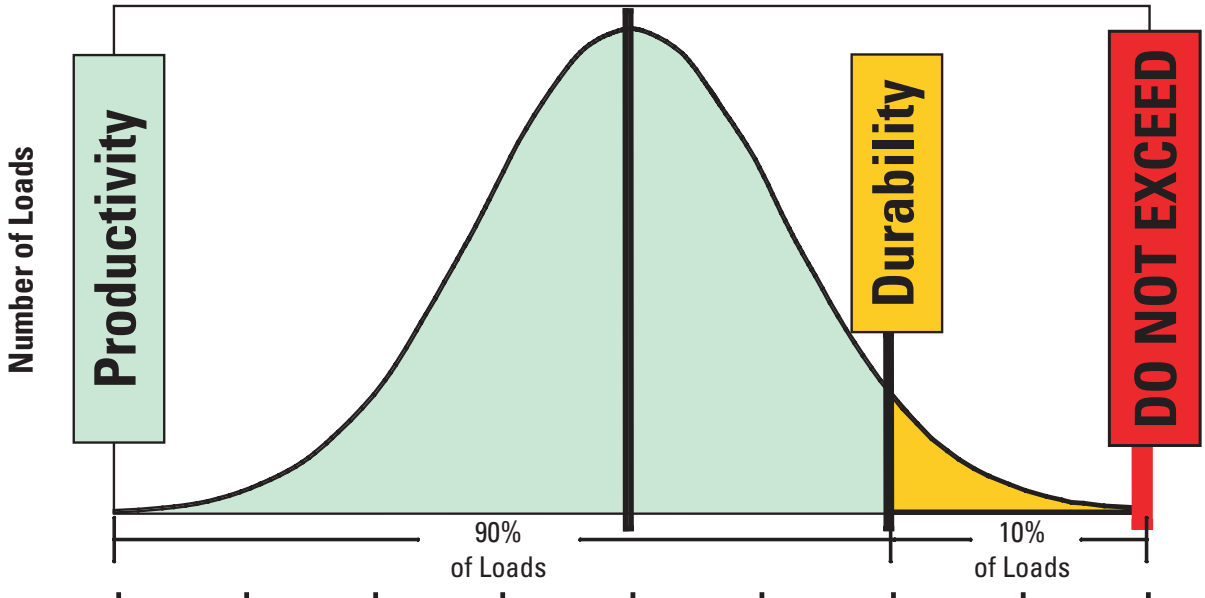

777 Payload, Tons	80	85	90	95	100	105	110	115	120
777 Payload, Tonnes	72.7	77.3	81.8	86.4	90.9	95.4	100	104.5	109.1
% of Target Payload	80%	85%	90%	95%	100%	105%	110%	115%	120%

Dimensions

All dimensions are approximate.

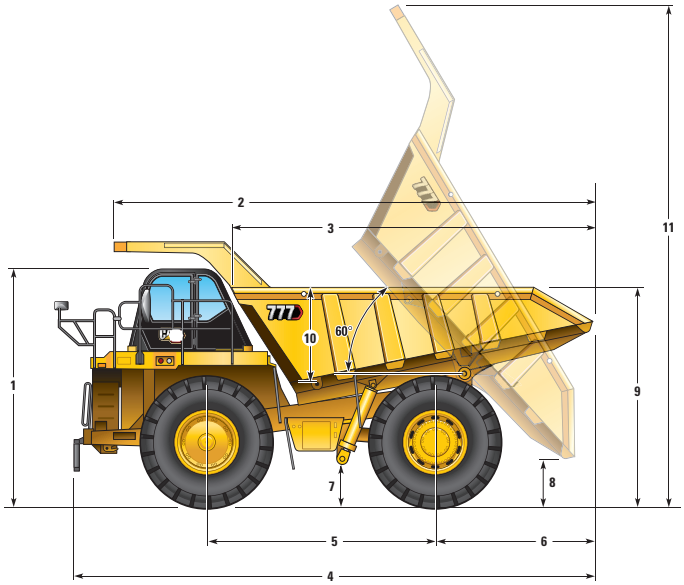

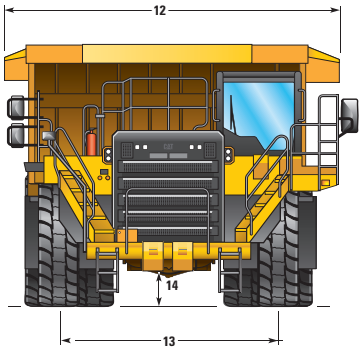

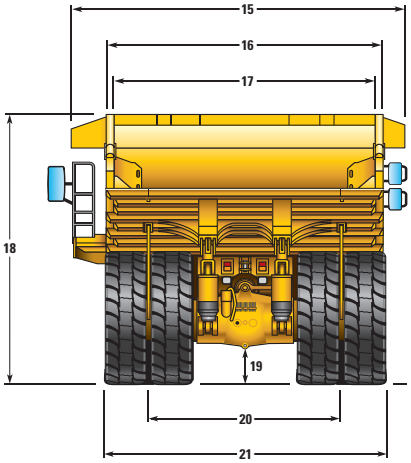

		Dual Slope		X Body		Coal Body 1		Coal Body 2	
1	Height to Top of ROPS	4730 mm	15.50 ft	4730 mm	15.50 ft	4730 mm	15.50 ft	4730 mm	15.50 ft
2	Overall Body Length	9830 mm	32.20 ft	10 070 mm	33.04 ft	10 274 mm	33.71 ft	10 445 mm	34.27 ft
3	Inside Body Length	6580 mm	21.50 ft	7037 mm	23.09 ft	7562 mm	24.81 ft	7734 mm	25.37 ft
4	Overall Length	10 535 mm	34.50 ft	10 758 mm	35.30 ft	10 968 mm	35.98 ft	11 140 mm	36.55 ft
5	Wheelbase	4560 mm	14.96 ft	4560 mm	14.96 ft	4560 mm	14.96 ft	4560 mm	14.96 ft
6	Rear Axle to Tail	3062 mm	10.00 ft	3263 mm	10.71 ft	3473 mm	11.39 ft	3644 mm	11.96 ft
7	Ground Clearance	896 mm	2.94 ft	896 mm	2.94 ft	896 mm	2.94 ft	896 mm	2.94 ft
8	Dump Clearance	965 mm	3.10 ft	893 mm	2.93 ft	935 mm	3.07 ft	821 mm	2.69 ft
9	Loading Height – Empty	4380 mm	14.30 ft	4429 mm	14.53 ft	4851 mm	15.92 ft	5321 mm	17.46 ft
10	Inside Body Depth – Maximum	1895 mm	6.20 ft	1777 mm	5.83 ft	2223 mm	7.29 ft	2693 mm	8.84 ft
11	Overall Height – Body Raised	9953 mm	32.60 ft	10 071 mm	33.04 ft	10 319 mm	33.85 ft	10 319 mm	33.85 ft
12	Operating Width	6687 mm	21.94 ft	6687 mm	21.94 ft	6706 mm	22.00 ft	6706 mm	22.00 ft
13	Front Tire Width	4170 mm	13.68 ft	4170 mm	13.68 ft	4170 mm	13.68 ft	4170 mm	13.68 ft
14	Engine Guard Clearance	864 mm	2.83 ft	864 mm	2.83 ft	864 mm	2.83 ft	864 mm	2.83 ft
15	Overall Canopy Width	6200 mm	20.34 ft	6200 mm	20.34 ft	6404 mm	21.01 ft	6404 mm	21.01 ft
16	Outside Body Width	5524 mm	18.10 ft	5682 mm	18.64 ft	6365 mm	20.88 ft	6368 mm	20.89 ft
17	Inside Body Width	5200 mm	17.00 ft	5450 mm	17.88 ft	6150 mm	20.18 ft	6150 mm	20.18 ft
18	Front Canopy Height	5200 mm	17.00 ft	5370 mm	17.62 ft	5840 mm	19.16 ft	5840 mm	19.16 ft
19	Rear Axle Clearance	902 mm	2.96 ft	902 mm	2.96 ft	902 mm	2.96 ft	902 mm	2.96 ft
20	Rear Dual Tire Width	3576 mm	11.73 ft	3576 mm	11.73 ft	3576 mm	11.73 ft	3576 mm	11.73 ft
21	Overall Tire Width	5223 mm	17.14 ft	5223 mm	17.14 ft	5223 mm	17.14 ft	5223 mm	17.14 ft

Retarding Performance – Tier 4 Final/Stage V

To determine retarding performance: Add lengths of all downhill segments and, using this total, refer to proper retarding chart. Read from gross weight down to the percent effective grade. Effective grade equals actual percent grade minus 1% for each 10 kg/t (20 lb/ton) of rolling resistance. From this weight-effective grade point, read horizontally to the curve with the highest obtainable gear, then down to maximum descent speed brakes can properly handle without exceeding cooling capacity. The following charts are based on these conditions: 32°C (90°F) ambient temperature, at sea level, with 27.00R49 (E4) tires.

NOTE: Select the proper gear to maintain engine rpm at the highest possible level, without overspeeding the engine. If cooling oil overheats, reduce ground speed to allow transmission to shift to the next lower speed range.

777 Brake Performance
• Continuous Grade Retarding

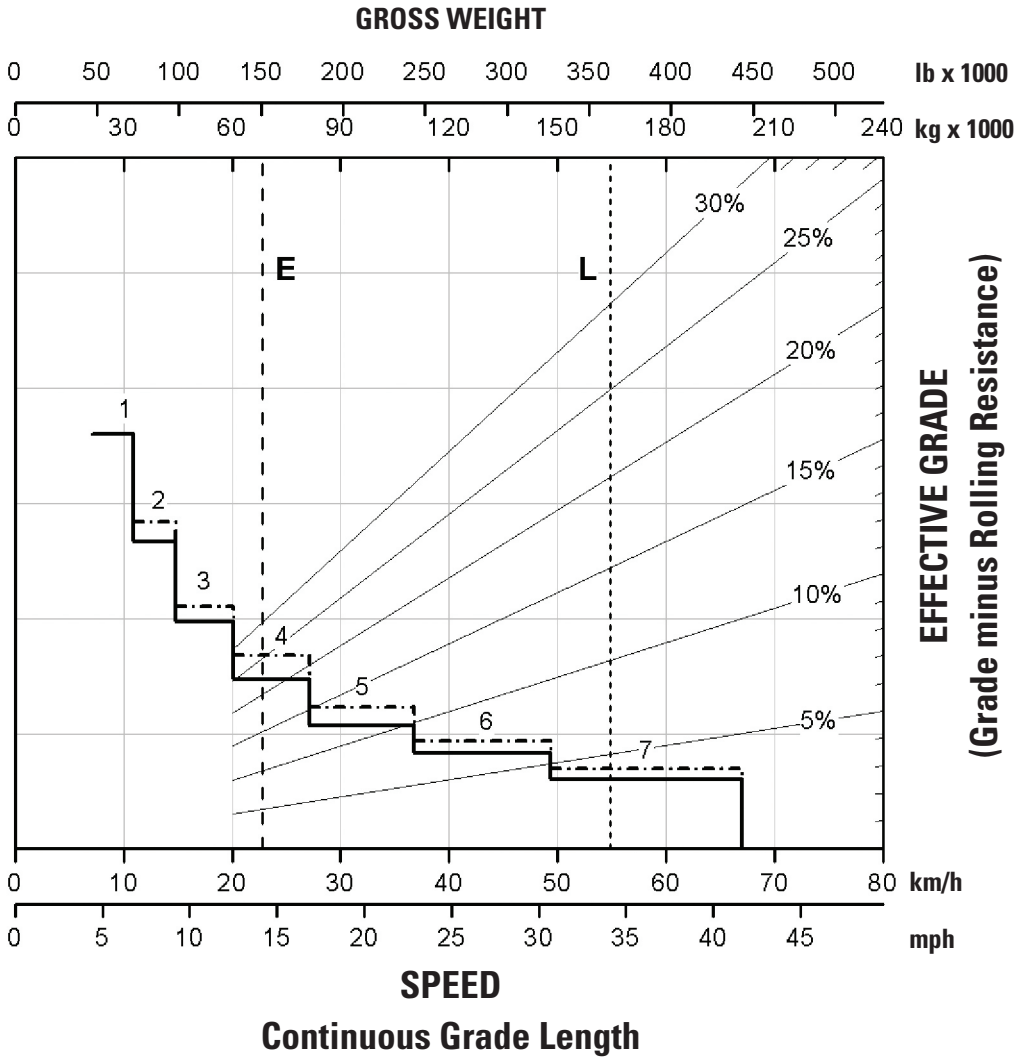

E — Empty 68 316 kg (150,612 lb)
L — Target GMW 164 654 kg (363,000 lb)
---------- With ARC Only
—·—·— ARC and Engine Brake

1A — 1st Gear (Torque Converter)
1B — 1st Gear
2A — 2nd Gear (Torque Converter)
2B — 2nd Gear
3 — 3rd Gear
4 — 4th Gear
5 — 5th Gear
6 — 6th Gear
7 — 7th Gear

Retarding Performance – Tier 4 Final/Stage V

777 Brake Performance
• 450 m (1,500 ft) • 600 m (2,000 ft)

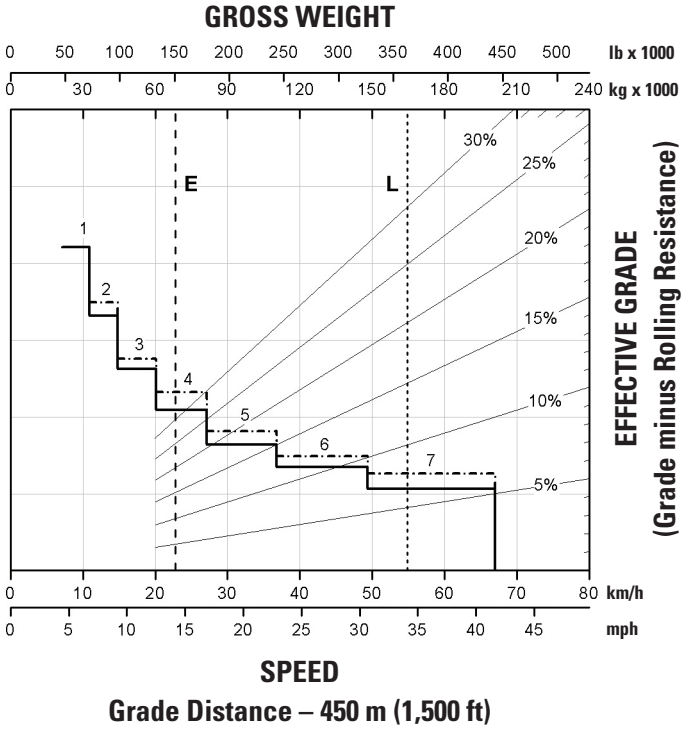

Grade Distance – 450 m (1,500 ft)

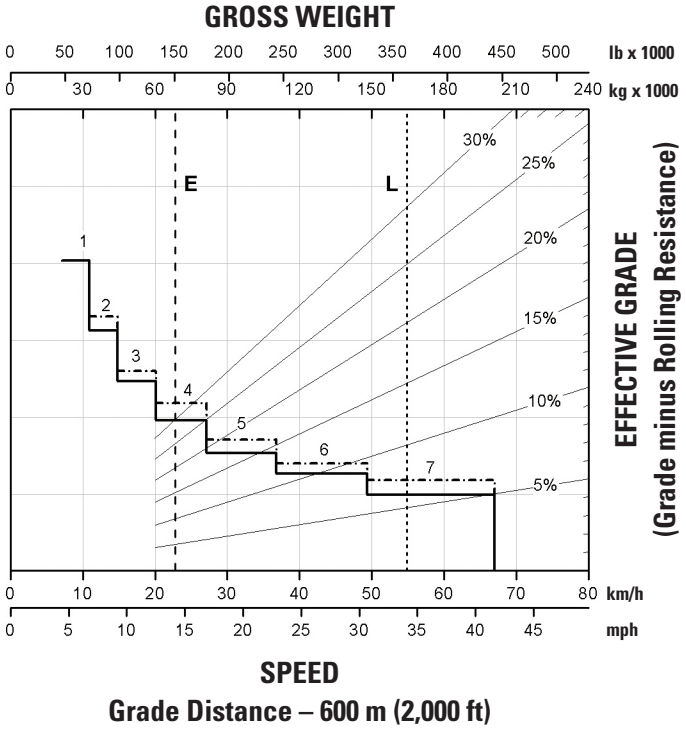

Grade Distance – 600 m (2,000 ft)

E — Empty 68 316 kg (150,612 lb)
L — Target GMW 164 654 kg (363,000 lb)
---------- With ARC Only
–·–·– ARC and Engine Brake

1 — 1st Gear
2 — 2nd Gear
3 — 3rd Gear
4 — 4th Gear
5 — 5th Gear
6 — 6th Gear
7 — 7th Gear

Retarding Performance – Tier 4 Final/Stage V

777 Brake Performance
• 900 m (3,000 ft) • 1500 m (5,000 ft)

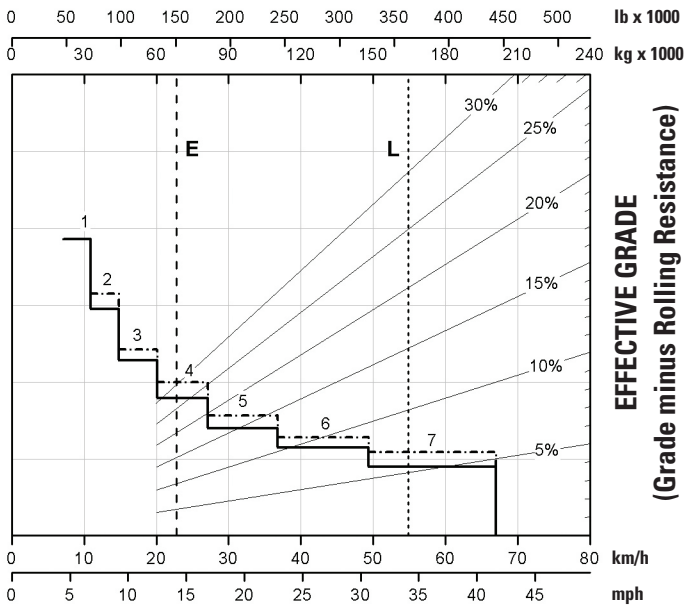

Grade Distance – 900 m (3,000 ft)

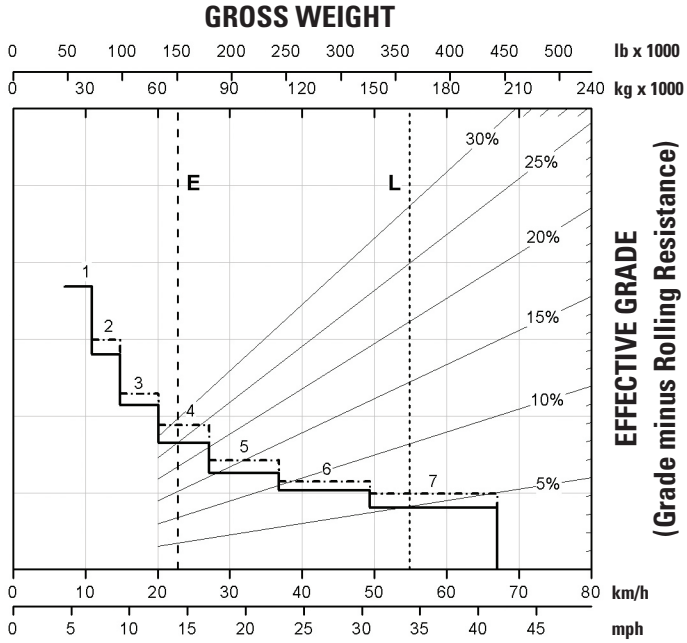

Grade Distance – 1500 m (5,000 ft)

E — Empty 68 316 kg (150,612 lb)
L — Target GMW 164 654 kg (363,000 lb)
---------- With ARC Only
—·—·— ARC and Engine Brake

1 — 1st Gear
2 — 2nd Gear
3 — 3rd Gear
4 — 4th Gear
5 — 5th Gear
6 — 6th Gear
7 — 7th Gear

Retarding Performance – Tier 2 Equivalent

To determine retarding performance: Add lengths of all downhill segments and, using this total, refer to proper retarding chart. Read from gross weight down to the percent effective grade. Effective grade equals actual percent grade minus 1% for each 10 kg/t (20 lb/ton) of rolling resistance. From this weight-effective grade point, read horizontally to the curve with the highest obtainable gear, then down to maximum descent speed brakes can properly handle without exceeding cooling capacity. The following charts are based on these conditions: 32°C (90°F) ambient temperature, at sea level, with 27.00R49 (E4) tires.

NOTE: Select the proper gear to maintain engine rpm at the highest possible level, without overspeeding the engine. If cooling oil overheats, reduce ground speed to allow transmission to shift to the next lower speed range.

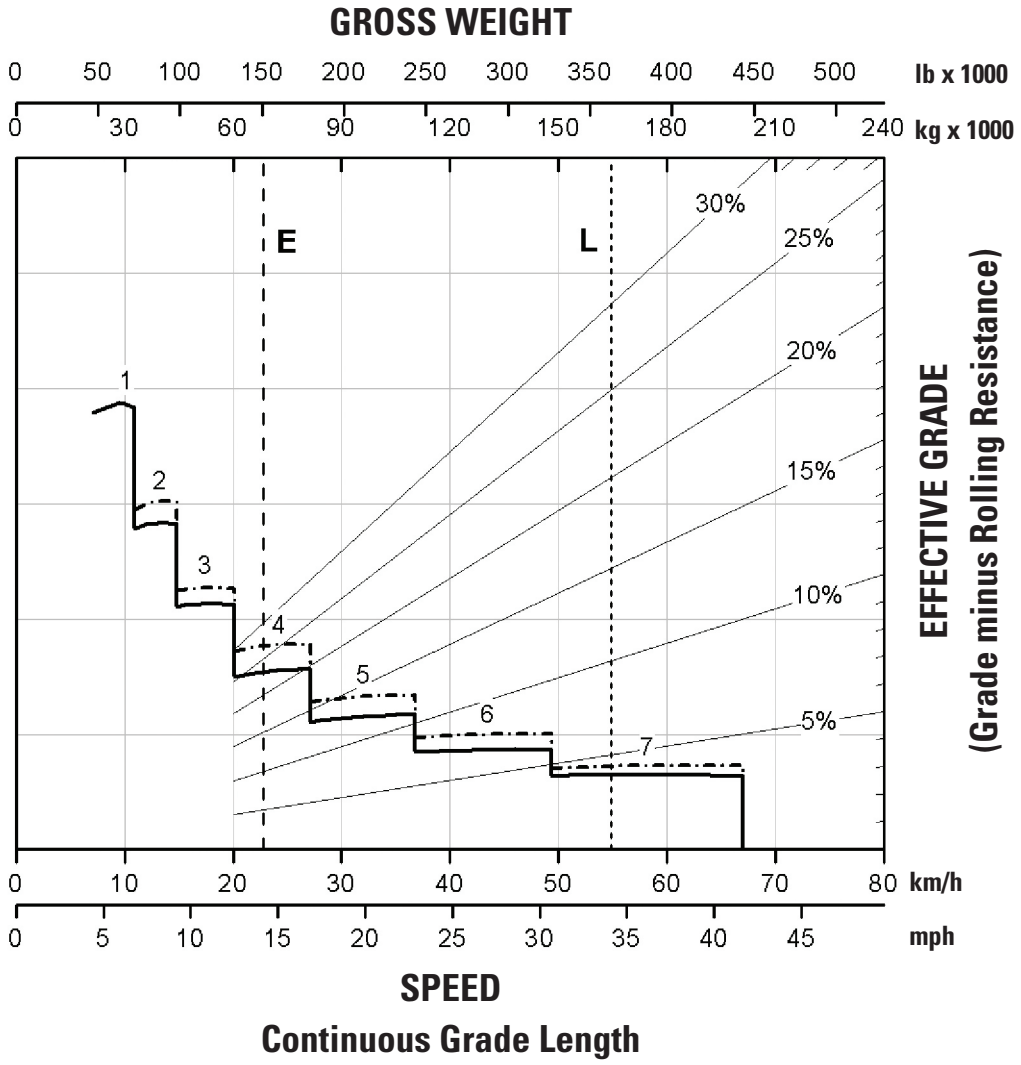

Engine Brake

Retarding Performance – Tier 2 Equivalent

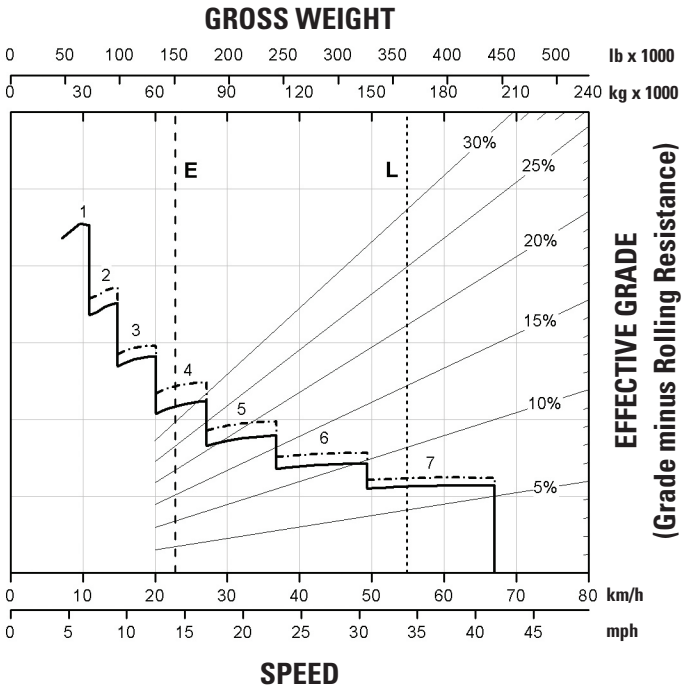

Grade Distance – 450 m (1,500 ft)

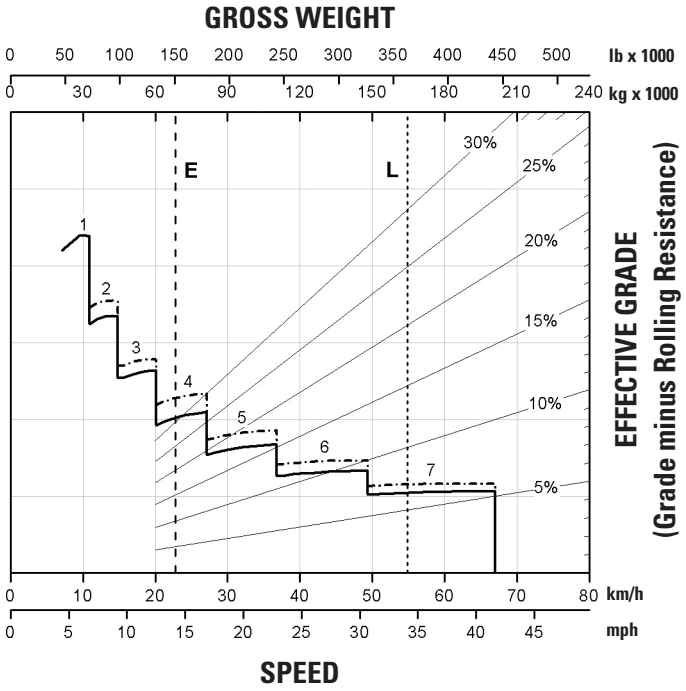

Grade Distance – 600 m (2,000 ft)

–·–·–·– Engine Brake

Retarding Performance – Tier 2 Equivalent

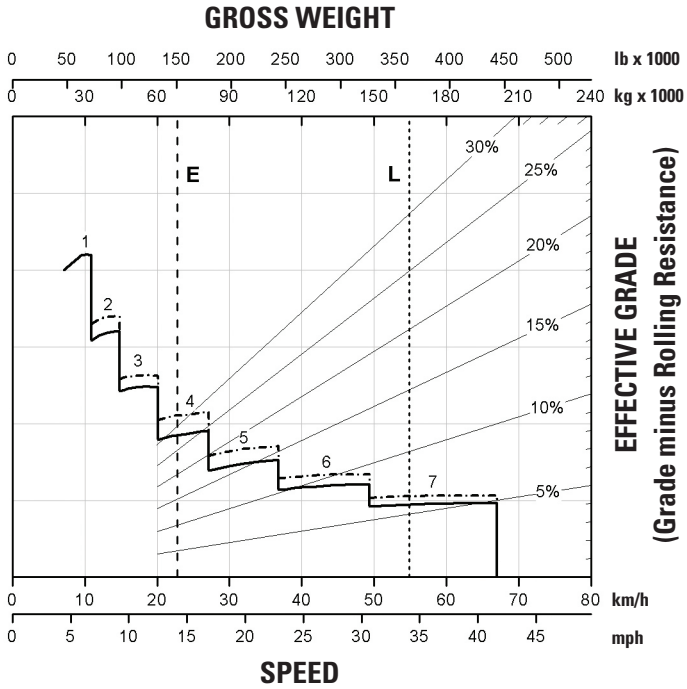

Grade Distance – 900 m (3,000 ft)

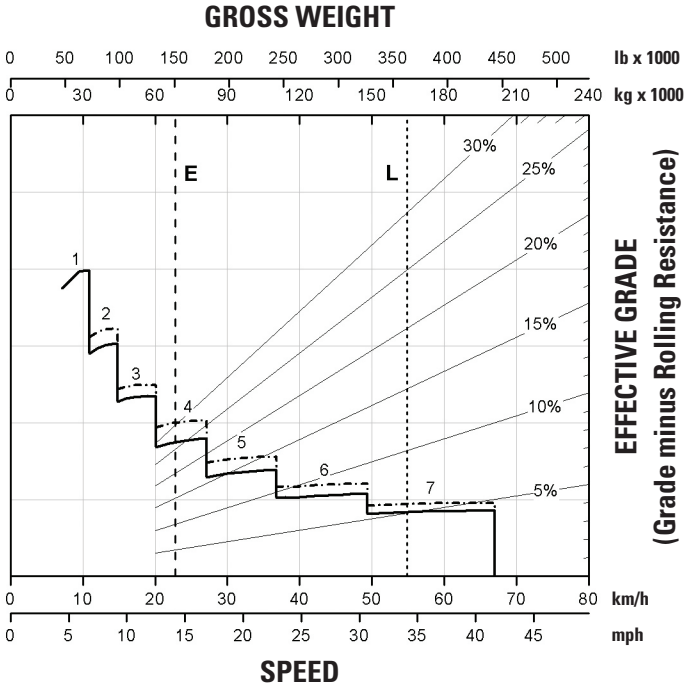

Grade Distance – 1500 m (5,000 ft)

–·–·–·– Engine Brake

Gradeability/Speed/Rimpull – Tier 4 Final/Stage V

To determine gradeability performance: Read from gross weight down to the percent of total resistance. Total resistance equals actual percent grade plus 1% for each 10 kg/t (20 lb/ton) of rolling resistance. From this weight-resistance point, read horizontally to the curve with the highest obtainable gear, then down to maximum speed. Usable rimpull will depend upon traction available and weight on drive wheels.

777 Rimpull-Speed-Gradeability
• 27.00R49 Tires

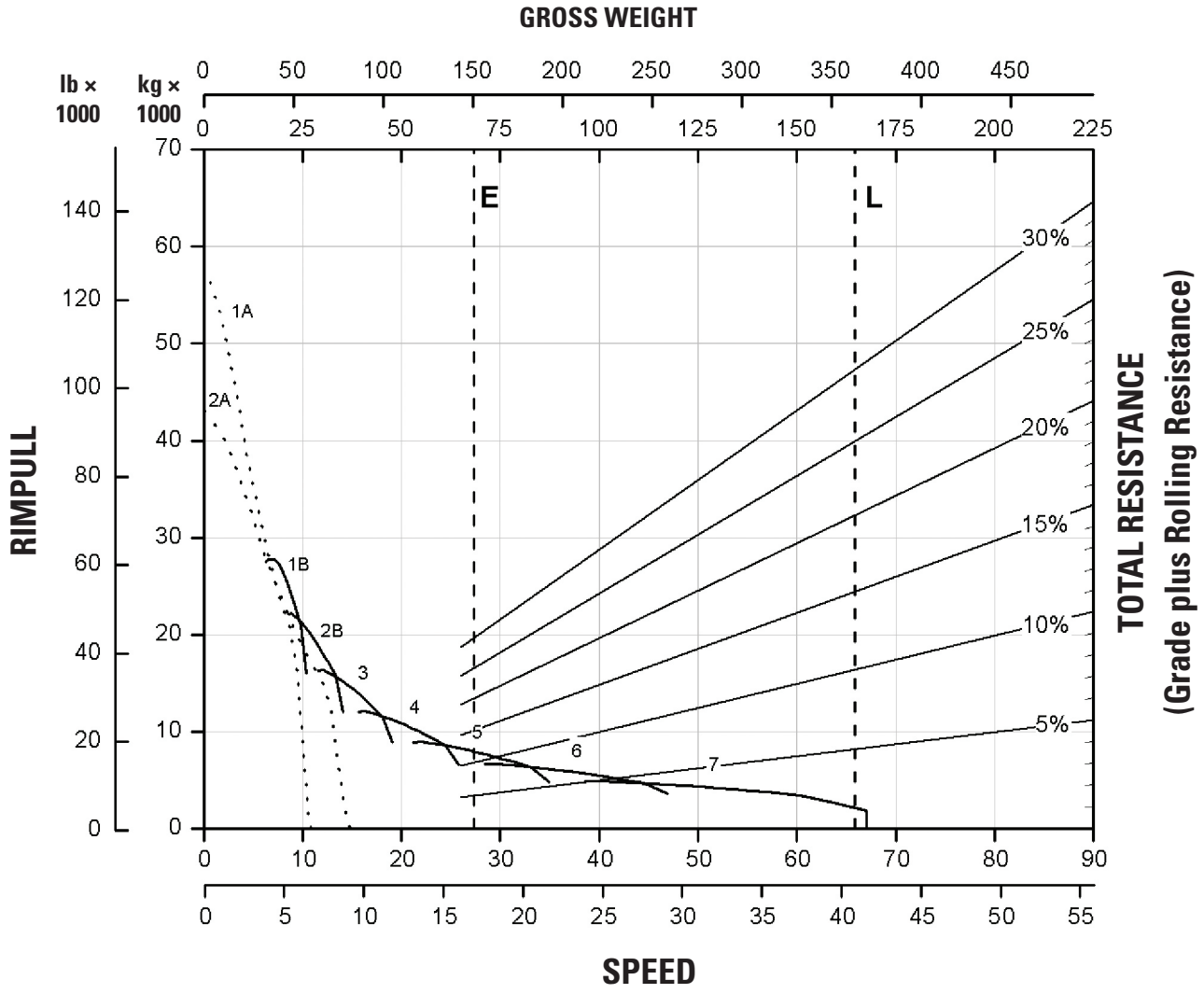

E — Empty 68 316 kg (150,612 lb)
L — Target GMW 164 654 kg (363,000 lb)

1A — 1st Gear (Torque Converter)
1B — 1st Gear
2A — 2nd Gear (Torque Converter)
2B — 2nd Gear
3 — 3rd Gear
4 — 4th Gear
5 — 5th Gear
6 — 6th Gear
7 — 7th Gear

Gradeability/Speed/Rimpull – Tier 2 Equivalent

To determine gradeability performance: Read from gross weight down to the percent of total resistance. Total resistance equals actual percent grade plus 1% for each 10 kg/t (20 lb/ton) of rolling resistance. From this weight-resistance point, read horizontally to the curve with the highest obtainable gear, then down to maximum speed. Usable rimpull will depend upon traction available and weight on drive wheels.

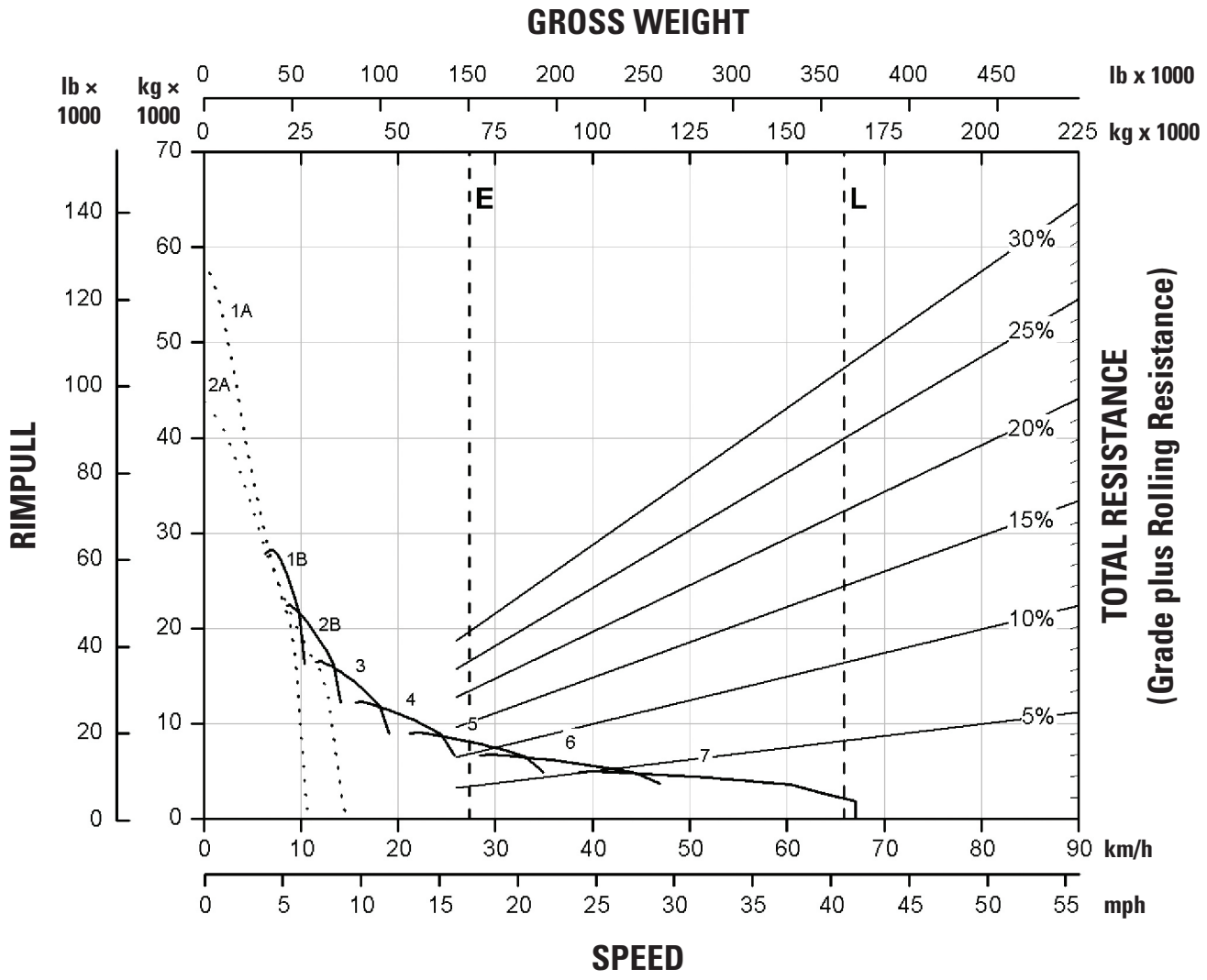

777 Off-Highway Truck Standard and Optional Equipment

Standard and Optional Equipment

Standard and optional equipment may vary. Consult your Cat® dealer for details.

	Standard	Optional
POWERTRAIN		
Air filter with precleaner (2)	✓	
Air-to-Air Aftercooler (ATAAC)	✓	
Automatic cold mode idle control	✓	
Autostall	✓	
Braking system: extended life brakes, brake wear indicator, Automatic Retarder Control (ARC) (utilizes oil-cooled, multiple disc brakes), brake release motor (towing), manual retarder (utilizes oil-cooled, multiple disc brakes), oil-cooled and multiple disc (front/rear), parking, secondary, service	✓	
Cat® C32B Engine (Tier 4 Final/EU Stage V/ Tier 2/EU Stage II)	✓	
Cat engine compression brake		✓
Cold weather packages		✓
Electric cold weather start (two starters and four batteries)	✓	
Electric priming pump	✓	
Engine Idle Shutdown	✓	
Ether starting aid	✓	
Extended life coolant to -35°C (-30°F)	✓	
Fan – variable speed (Tier 4)	✓	
Fan – variable speed (Tier 2)		✓
Fuel filter/water separator	✓	
Muffler, exhaust (Tier 2)	✓	
Muffler, sound suppression (Tier 2)		✓
Transmission: 7-speed automatic powershift with Electronic Clutch Pressure Control (ECPC), torque shift management, part throttle shifting, body upshift inhibitor, directional shift management, downshift inhibitor, neutral start switch, neutral coast inhibitor, reverse shift inhibitor, reverse neutralizer during dumping, programmable top gear selection, Advanced Productivity Electronic Control Strategy (APECS software), auto neutral Idle	✓	
Turbocharger (2)	✓	
ELECTRICAL		
Alarm, backup	✓	
Alternator, 115 ampere	✓	
Auxiliary jump start receptacle	✓	
Batteries, maintenance-free, 12V (4), 200 amp-hour	✓	
Electrical system, 25 amp, 24V to 12V converter	✓	
Lighting system (LED): backup light, directional signals/hazard warning (front and rear), headlights, payload – indicator lights, operator access courtesy lights, side profile lights, stop/ tail lights, service lights	✓	

	Standard	Optional
OPERATOR ENVIRONMENT		
Air conditioning	✓	
Ashtray and cigarette lighter	✓	
Auto temp control	✓	
Cat Advanced Payload		✓
Coat hook	✓	
Cup holders (4)	✓	
Diagnostic connection port, 24V	✓	
Electric left-side window control	✓	
Entertainment radio ready: 5-amp converter, speakers, antenna, wiring harness	✓	
Foot rest	✓	
Gauges/indicators: brake oil temperature, coolant temperature, hour meter, tachometer, engine overspeed indicator, fuel level, speedometer with odometer, transmission gear indicator	✓	
Heater/defroster (11 070 kCal/43,930 BTU)	✓	
Integrated hoist and transmission control	✓	
Horn, electric	✓	
Lights: dome, courtesy	✓	
Load counter, automatic	✓	
Mirrors, convex		✓
Mirrors, heated	✓	
Power port, 12V (2)	✓	
ROPS cab, insulated/sound suppressed	✓	
Seat, Cat Next Gen Deluxe, retractable 4-point seat belt with shoulder harness and seat belt reminder	✓	
Spare rim		✓
Steering wheel, padded/tilt/telescopic	✓	
Storage compartment	✓	
Sun visor	✓	
Throttle lock	✓	
Tinted, laminated glass	✓	
Touchscreen display, 7-inch	✓	
Trainer seat, lap belt, with seat belt reminder	✓	
Spare rim		✓
Visibility package (meets ISO 5006 requirements)		✓
Window, right-side, hinged access/egress	✓	
Windshield wiper, intermittent, and washer	✓	
TECHNOLOGY PRODUCTS		
Adaptive economy mode	✓	
Advanced health	✓	
Object detection (4 cameras)		✓
Product Link™ ready (Level 1)	✓	
Road analysis control (RAC)		✓
TKPH/TMPH (Tonnes Kilometer Per Hour/ Tons Mile Per Hour)		✓
Work Area Vision System (WAVS)		✓

(continued on next page)

Standard and Optional Equipment *(continued)*

Standard and optional equipment may vary. Consult your Cat dealer for details.

OTHER	Standard	Optional
Auto-lube grease fittings		✓
Body down indicator	✓	
Body heat, liners,sideboards		✓
Body mounting group	✓	
Body safety pin (secures body in up position)	✓	
Cab precleaner		✓
Center-mounted rims	✓	
Clustered grease fittings	✓	
Control, hoist		✓
Driveline guards	✓	
Engine crankcase guards	✓	
Engine sound suppression (XQ) (Tier 4)		✓
Fan and AC guards	✓	
Fire suppression ready	✓	
Fire suppression arrangement		✓
Fluid fill service center		✓
Fuel level monitoring		✓
Fuel tank (1136 L/300 gal)	✓	
Fuel tank (1325 L /350 gal)		✓

OTHER (CONTINUED)	Standard	Optional
Ground-level battery disconnect	✓	
Ground-level engine shutdown	✓	
Ground-level grease fittings	✓	
Mud protection package		✓
Oil Renewal System		✓
Rear Axle Filtration (RAX)		✓
Reservoirs (separate): brake/hoist, steering, transmission/torque converter	✓	
Rims 19.5 x 49	✓	
Rock ejectors	✓	
Supplemental steering, automatic	✓	
Tie down eyes	✓	
Tow hooks, front/tow pin, rear	✓	
Traction Control System (TCS) (new version)		✓
Vandalism protection locks	✓	
Wheel chocks		✓
Wiggins fast fuel	✓	

777 Environmental Declaration

The following information applies to the machine at the time of final manufacture as configured for sale in the regions covered in this document. The content of this declaration is valid as of the date issued; however, content related to machine features and specifications are subject to change without notice. For additional information, please see the machine's Operation and Maintenance Manual.

For more information on sustainability in action and our progress, please visit https://www.caterpillar.com/en/company/sustainability.

Engine

- The Cat® C32B engine is available in configurations that meet U.S. EPA Tier 4 Final and EU Stage V emission standards or noncertified configuration that is equivalent to U.S. EPA Tier 2.
- Cat U.S. EPA Tier 4 and EU Stage V engines are required to use ULSD (ultra-low sulfur diesel fuel with 15 ppm of sulfur or less) and are compatible* with ULSD blended with the following lower-carbon intensity fuels** up to:
  - ✓ 20% biodiesel FAME (fatty acid methyl ester)***
  - ✓ 100% renewable diesel, HVO (hydrotreated vegetable oil) and GTL (gas-to-liquid) fuels
- Cat engines emitting equivalent to U.S EPA Tier 2, or equivalent to U.S. EPA Tier 3 and EU Stage IIIA, are compatible* with diesel fuel blended with the following lower-carbon intensity fuels*** up to:
  - ✓ 100% biodiesel FAME (fatty acid methyl ester)****
  - ✓ 100% renewable diesel, HVO (hydrotreated vegetable oil) and GTL (gas-to-liquid) fuels

  Refer to guidelines for successful application. Please consult your Cat dealer or "Caterpillar Machine Fluids Recommendations" (SEBU6250) for details.

* *While Caterpillar engines are compatible with these alternative fuels,some regions may not allow their use.*

** *Tailpipe greenhouse gas emissions from lower-carbon intensity fuels are essentially the same as traditional fuels.*

*** *Engines with no aftertreatment devices are compatible with higher blends, up to 100% biodiesel (for use of blends higher than 20% biodiesel, consult your Cat dealer).*

**** *For use of blends higher than 20% biodiesel, consult your Cat dealer.*

Air Conditioning System

- The air conditioning system on this machine contains the fluorinated greenhouse gas refrigerant R1234yf. Refer to the machine labeling for identification of the gas.
- If equipped with R1234yf (Global Warming Potential = 0.501), thesystem contains 1.85 kg (4.1 lb) of refrigerant which has a CO_2 equivalent of 0.001 metric tonnes (0.001 tons).

Paint

- Based on best available knowledge, the maximum allowable concentration, measured in parts per million (PPM), of the following heavy metals in paint are:
  - – Barium < 0.01%
  - – Cadmium < 0.01%
  - – Chromium < 0.01%
  - – Lead < 0.01%

Sound – Tier 4 Final/Stage V/Tier 2 Equivalent

Operator Sound Pressure Level (ISO 6396:2008)	70 dB(A)
Machine Sound Pressure Level (ISO 6395:2008)	114.5 dB(A)

- The operator sound pressure level was measured according to ISO 6396:2008.The measurement was conducted at 70% of the maximum engine cooling fan speed.
- The machine sound power level was measured according to ISO 6395:2008.The measurement was conducted at 70% of the maximum engine cooling fan speed.
- Hearing protection may be needed when operating with an open operator station and cab (when not properly maintained or doors/windows open) for extended periods or in a noisy environment.

Oils and Fluids

- Caterpillar factory fills with ethylene glycol coolants. Cat Diesel Engine Antifreeze/Coolant (DEAC) and Cat Extended Life Coolant (ELC) can be recycled. Consult your Cat dealer for more information.

  Additional fluids are likely to be present, please consult the Operations and Maintenance Manual or the Application and Installation guide for complete fluid recommendations and maintenance intervals.

Features and Technology

- The following features and technology may contribute to fuel savings and/or carbon reduction. Features may vary. Consult your Cat dealer for details.
  - – Automatically optimize fuel consumption with two fuel economy modes: standard and adaptive
  - – Adjustable Engine Idle Shutdown conserves fuel when the truck is in park and idle for a present amount of time
  - – Haul at a more fuel-efficient engine speed and gear selection with speed limiting
  - – Longer service life for hydraulic oil filter provides longer life with a 1,000-hour replacement interval

オフロード法２０１４年
基準適合

For more complete information on Cat products, dealer services, and industry solutions, visit us on the web at **www.cat.com.**

Materials and specifications are subject to change without notice. Featured machines in photos may include additional equipment. See your Cat dealer for available options.

© 2026 Caterpillar. All Rights Reserved. CAT, CATERPILLAR, LET'S DO THE WORK, their respective logos, Product Link, "Caterpillar Corporate Yellow", the "Power Edge" and Cat "Modern Hex" trade dress as well as corporate and product identity used herein, are trademarks of Caterpillar and may not be used without permission.

AEXQ3420-05 (09-2026)
Replaces AEXQ3420-04
Build number: 07C
(Global)