M0098787-04 (en-us)
September 2026

Operation and Maintenance Manual

1706A-E93TA and 1706D-E93TA Industrial Engine

Important Safety Information

Most accidents that involve product operation, maintenance and repair are caused by failure to observe basic safety rules or precautions. An accident can often be avoided by recognizing potentially hazardous situations before an accident occurs. A person must be alert to potential hazards. This person should also have the necessary training, skills and tools to perform these functions correctly.

Incorrect operation, lubrication, maintenance or repair of this product can be dangerous and could result in injury or death.

Do not operate or perform any lubrication, maintenance or repair on this product, until you have read and understood the operation, lubrication, maintenance and repair information.

Safety precautions and warnings are provided in this manual and on the product. If these hazard warnings are not heeded, bodily injury or death could occur to you or to other persons.

The hazards are identified by the “Safety Alert Symbol” and followed by a “Signal Word” such as “DANGER”, “WARNING” or “CAUTION”. The Safety Alert “WARNING” label is shown below.

⚠ WARNING

The meaning of this safety alert symbol is as follows:

Attention! Become Alert! Your Safety is Involved.

The message that appears under the warning explains the hazard and can be either written or pictorially presented.

Operations that may cause product damage are identified by “NOTICE” labels on the product and in this publication.

Perkins cannot anticipate every possible circumstance that might involve a potential hazard. The warnings in this publication and on the product are, therefore, not all inclusive. You must not use this product in any manner different from that considered by this manual without first satisfying yourself that you have considered all safety rules and precautions applicable to the operation of the product in the location of use, including site-specific rules and precautions applicable to the worksite. If a tool, procedure, work method or operating technique that is not specifically recommended by Perkins is used, you must satisfy yourself that it is safe for you and for others. You should also ensure that you are authorized to perform this work, and that the product will not be damaged or become unsafe by the operation, lubrication, maintenance or repair procedures that you intend to use.

The information, specifications, and illustrations in this publication are on the basis of information that was available at the time that the publication was written. The specifications, torques, pressures, measurements, adjustments, illustrations, and other items can change at any time. These changes can affect the service that is given to the product. Obtain the complete and most current information before you start any job. Perkins dealers or Perkins distributors have the most current information available.

⚠ WARNING

When replacement parts are required for this product Perkins recommends using Perkins replacement parts.

Failure to heed this warning can lead to premature failures, product damage, personal injury or death.

In the United States, the maintenance, replacement, or repair of the emission control devices and systems may be performed by any repair establishment or individual of the owner's choosing.

Table of Contents

Foreword 4

Safety Section

Safety Messages 6

Additional Messages 10

General Hazard Information 11

Burn Prevention 14

Fire Prevention and Explosion Prevention 15

Crushing Prevention and Cutting Prevention .. 17

Mounting and Dismounting 17

High Pressure Fuel Lines 17

Before Starting Engine 19

Engine Starting 19

Engine Stopping 20

Electrical System 20

Engine Electronics 21

Product Information Section

Model Views 22

Product Identification Information 26

Operation Section

Lifting and Storage 28

Features and Controls 33

Engine Diagnostics 34

Engine Starting 36

Engine Operation 41

Engine Stopping 42

Cold Weather Operation 43

Maintenance Section

Refill Capacities 45

Maintenance Recommendations 61

Maintenance Interval Schedule 64

Warranty Section

Warranty Information 90

Reference Information Section

Engine Ratings 91

Customer Service 92

Reference Materials 93

Index Section

Index 94

Foreword

California Proposition 65 Warning

Diesel engine exhaust and some of its constituents are known to the State of California to cause cancer, birth defects, and other reproductive harm.

WARNING – This product can expose you to chemicals including ethylene glycol, which is known to the State of California to cause birth defects or other reproductive harm. For more information go to:

www.P65Warnings.ca.gov

Do not ingest this chemical. Wash hands after handling to avoid incidental ingestion.

WARNING – This product can expose you to chemicals including lead and lead compounds, which are known to the State of California to cause cancer, birth defects, or other reproductive harm. For more information go to:

www.P65Warnings.ca.gov

Wash hands after handling components that may contain lead.

Literature Information

This manual contains safety, operation instructions, lubrication, and maintenance information. This manual should be stored in or near the engine area in a literature holder or literature storage area. Read, study, and keep the manual with the literature and engine information.

English is the primary language for all Perkins publications. The English used facilitates translation and consistency.

Some photographs or illustrations in this manual show details or attachments that may be different from your engine. Guards and covers may have been removed for illustrative purposes. Continuing improvement and advancement of product design may have caused changes to your engine which are not included in this manual. Whenever a question arises regarding your engine, or this manual, please consult with your Perkins dealer or your Perkins distributor for the latest available information.

Safety

This safety section lists basic safety precautions. In addition, this section identifies hazardous, warning situations. Read and understand the basic precautions listed in the safety section before operating or performing lubrication, maintenance, and repair on this product.

Operation

Operating techniques outlined in this manual are basic. The operating techniques assist with developing the skills and techniques required to operate the engine more efficiently and economically. Skill and techniques develop as the operator gains knowledge of the engine and the capabilities of the engine.

The operation section is a reference for operators. Photographs and illustrations guide the operator through procedures of inspecting, starting, operating, and stopping the engine. This section also includes a discussion of electronic diagnostic information.

Maintenance

The maintenance section is a guide to engine care. The illustrated, step-by-step instructions are grouped by service hours and/or calendar time maintenance intervals. Items in the maintenance schedule are referenced to detailed instructions that follow.

Recommended service should be performed at the appropriate intervals as indicated in the Maintenance Interval Schedule. The actual operating environment of the engine also governs the Maintenance Interval Schedule. Therefore, under severe, dusty, wet, or freezing cold operating conditions, more frequent lubrication, and maintenance than is specified in the Maintenance Interval Schedule may be necessary.

The maintenance schedule items are organized for a preventive maintenance management program. If the preventive maintenance program is followed, a periodic tune-up is not required. The implementation of a preventive maintenance management program should minimize operating costs through cost avoidances resulting from reductions in unscheduled downtime and failures.

Maintenance Intervals

Perform maintenance on items at multiples of the original requirement. Each level and/or individual items in each level should be shifted ahead or back depending upon your specific maintenance practices, operation, and application. Perkins recommends that the maintenance schedules be reproduced and displayed near the engine as a convenient reminder. Perkins also recommends that a maintenance record be maintained as part of the permanent record of the engine.

Your authorized Perkins dealer or your Perkins distributor can assist you in adjusting your maintenance schedule to meet the needs of your operating environment.

Overhaul

Major engine overhaul details are not covered in the Operation and Maintenance Manual except for the interval and the maintenance items in that interval. Major repairs are best left to trained personnel or an authorized Perkins distributor or dealer. Your Perkins dealer or your Perkins distributor offers various options regarding overhaul programs. If you experience a major engine failure, there are also numerous after failure overhaul options available. Consult with your Perkins dealer or your Perkins distributor for information regarding these options.

Safety Section

i07544347

Safety Messages

There may be several specific safety messages on your engine. The exact location and a description of the safety messages are reviewed in this section. Become familiar with all safety messages.

Ensure that all the safety messages are legible. Clean the safety messages or replace the safety messages if the words cannot be read or if the illustrations are not visible. Use a cloth, water, and soap to clean the safety messages. Do not use solvents, gasoline, or other harsh chemicals. Solvents, gasoline, or harsh chemicals could loosen the adhesive that secures the safety messages. The safety messages that are loosened could drop off the engine.

Replace any safety message that is damaged or missing. If a safety message is attached to a part of the engine that is replaced, install a new safety message on the replacement part. Your Perkins distributor can provide new safety messages.

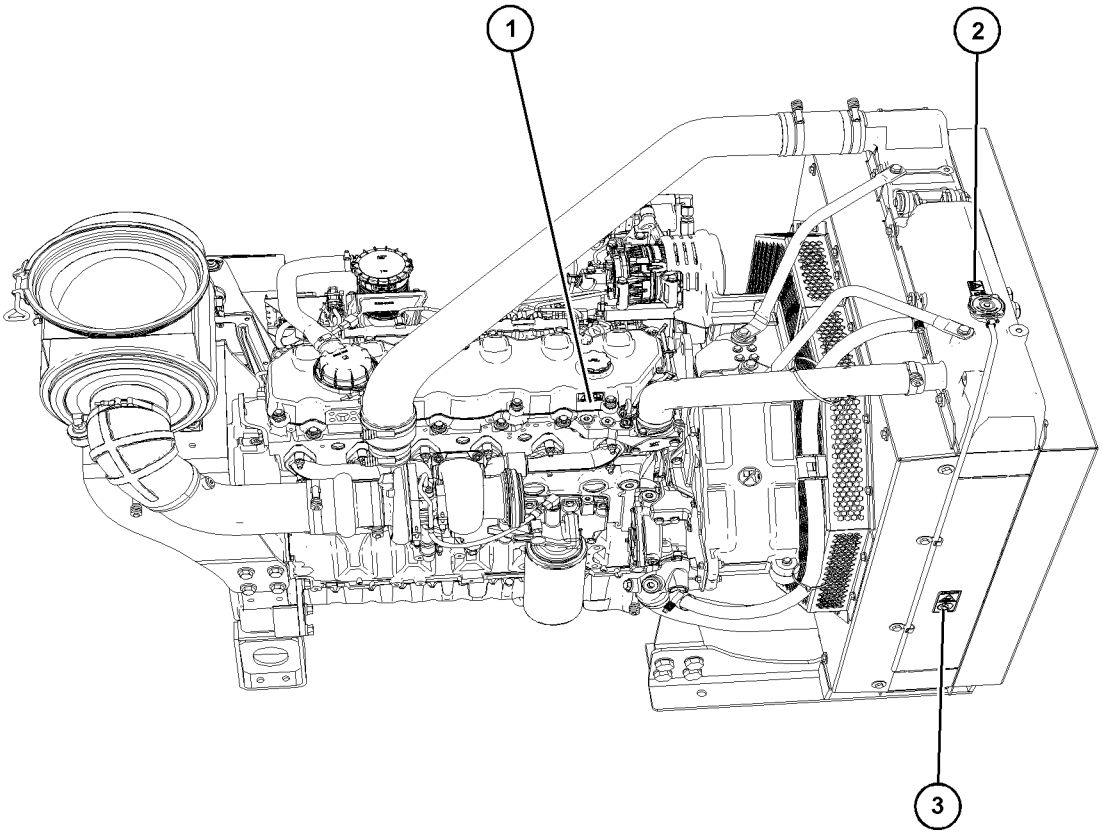

Illustration 1 g06355229

Typical example

(1) Universal warning label (2) Hot fluid under pressure label (3) Hot surface label

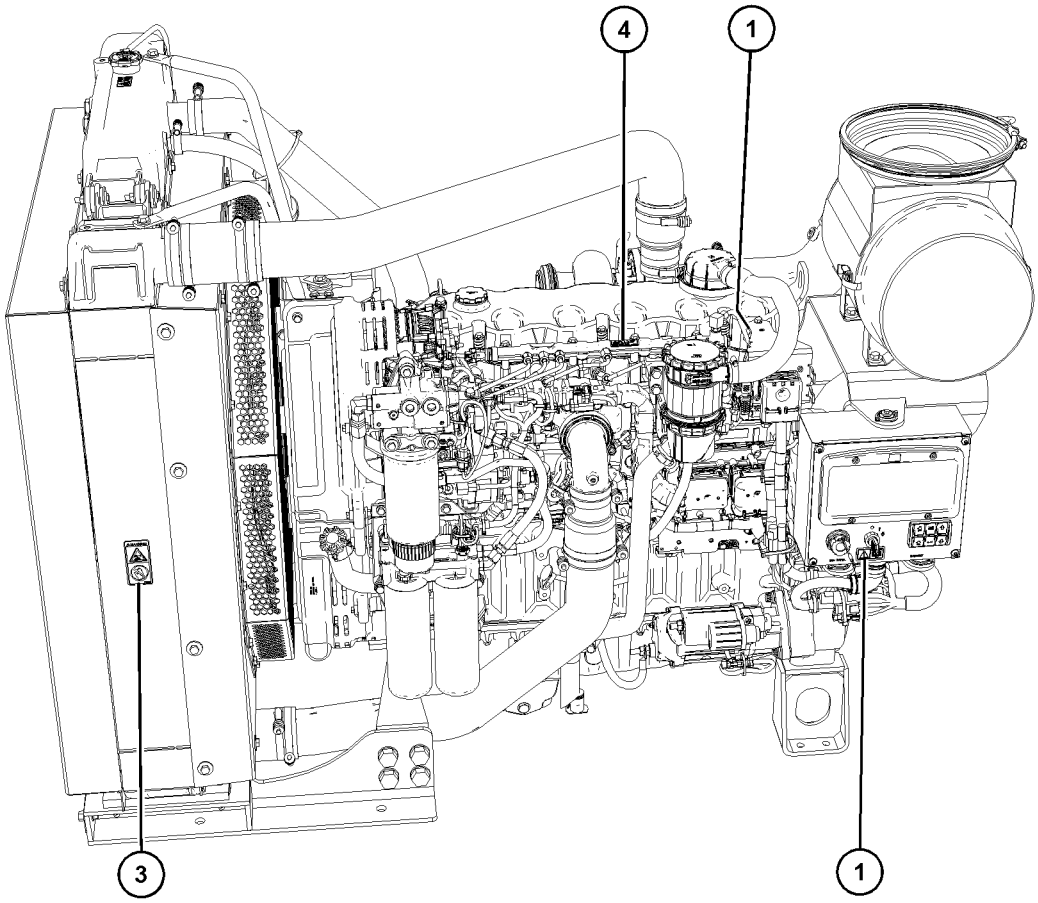

Illustration 2 g06355248

Typical example

(1) Universal warning label (3) Hot surface label (4) Hand high-pressure label

Universal Warning (1)

Illustration 3 g01370904

WARNING

Do not operate or work on this equipment unless you have read and understand the instructions and warnings in the Operation and Maintenance Manuals. Failure to follow the instructions or heed the warnings could result in serious injury or death.

One safety message universal warning label (1) is on the right side of the valve mechanism cover. One safety message universal warning label (1) is on the left side of the valve mechanism cover. One safety message universal warning label (1) is on the front of the control panel if equipped.

Hot Fluid Under Pressure (2)

Illustration 4 g01371640

WARNING

Pressurized system! Hot coolant can cause serious burns, injury or death. To open the cooling system filler cap, stop the engine and wait until the cooling system components are cool. Loosen the cooling system pressure cap slowly in order to relieve the pressure. Read and understand the Operation and Maintenance Manual before performing any cooling system maintenance.

This safety message is located by the cooling system filler cap.

Hot Surface (3)

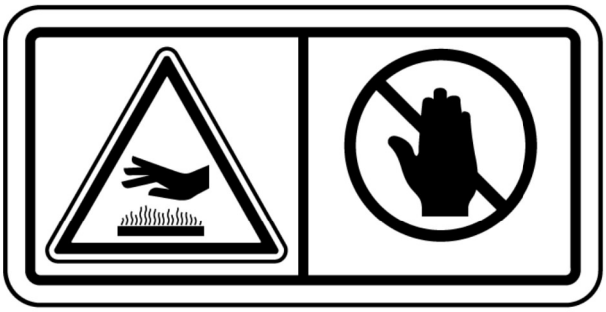

Illustration 5 g01372256

WARNING

Hot parts or hot components can cause burns or personal injury. Do not allow hot parts or components to contact your skin. Use protective clothing or protective equipment to protect your skin.

This safety message is on the sides of the radiator.

Hand High Pressure (4)

Illustration 6 g06247774

WARNING

Contact with high pressure fuel may cause fluid penetration and burn hazards. High pressure fuel spray may cause a fire hazard. Failure to follow these inspection, maintenance and service instructions may cause personal injury or death.

One safety message for high pressure (4) is on the fuel rail.

i07536281

Additional Messages

There are several specific messages on this engine. The exact location of the messages and the description of the information are reviewed in this section. Become familiar with all messages.

Make sure that all the messages are legible. Clean the messages or replace the messages if you cannot read the words. Replace the illustrations if the illustrations are not legible. When you clean the messages, use a cloth, water, and soap. Do not use solvent, gasoline, or other harsh chemicals to clean the messages. Solvents, gasoline, or harsh chemicals could loosen the adhesive that secures the messages. Loose adhesive will allow the messages to fall.

Replace any message that is damaged, or missing. If a message is attached to a part that is replaced, install a message on the replacement part. Any Perkins distributor can provide new messages.

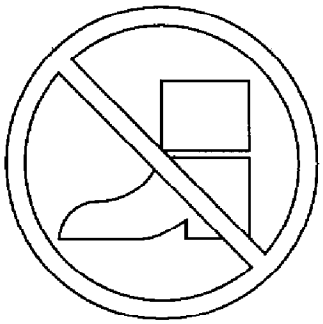

Illustration 7 g00911158

Do not step in this area.

This notice should be located on the alternator guard.

i08325759

General Hazard Information

Illustration 8 g00104545

Attach a “Do Not Operate” warning tag or a similar warning tag to the start switch or to the controls before the engine is serviced or before the engine is repaired. Attach the warning tags to the engine and to each operator control station. When appropriate, disconnect the starting controls.

Do not allow unauthorized personnel on the engine, or around the engine when the engine is being serviced.

- Tampering with the engine installation or tampering with the OEM supplied wiring can be dangerous. Personal injury, death and/or engine damage could result.
- Vent the engine exhaust to the outside when the engine is operated in an enclosed area.
- If the engine is not running, do not release the secondary brake or the parking brake systems unless the vehicle is blocked or unless the vehicle is restrained.
- Wear a hard hat, protective glasses, and other protective equipment, as required.
- When work is performed around an engine that is operating, wear protective devices for ears to help prevent damage to hearing.
- Do not wear loose clothing or jewelry that can snag on controls or on other parts of the engine.
- Ensure that all protective guards and all covers are secured in place on the engine.
- Never put maintenance fluids into glass containers. Glass containers can break.
- Use all cleaning solutions with care.
- Report all necessary repairs.

Unless other instructions are provided, perform the maintenance under the following conditions:

- The engine is stopped. Ensure that the engine cannot be started.
- The protective locks or the controls are in the applied position.
- Engage the secondary brakes or parking brakes.
- Block the vehicle or restrain the vehicle before maintenance or repairs are performed.
- Disconnect the batteries when maintenance is performed or when the electrical system is serviced. Disconnect the battery ground leads. Tape the leads to help prevent sparks. If equipped, allow the diesel exhaust fluid to be purged before disconnecting the battery.
- If equipped, disconnect the connectors for the unit injectors that are located on the valve cover base. This action will help prevent personal injury from the high voltage to the unit injectors. Do not come in contact with the unit injector terminals while the engine is operating.
- Do not attempt any repairs or any adjustments to the engine while the engine is operating.
- Do not attempt any repairs that are not understood. Use the proper tools. Replace any equipment that is damaged or repair the equipment.
- For initial start-up of a new engine or for starting an engine that has been serviced, make provisions to stop the engine if an overspeed occurs. The stopping of the engine may be accomplished by shutting off the fuel supply and/or the air supply to the engine. Ensure that only the fuel supply line is shut off. Ensure that the fuel return line is open.
- Start the engine from the operators station (cab). Never short across the starting motor terminals or the batteries. This action could bypass the engine neutral start system and/or the electrical system could be damaged.

Engine exhaust contains products of combustion which may be harmful to your health. Always start the engine and operate the engine in a well ventilated area. If the engine is in an enclosed area, vent the engine exhaust to the outside.

Cautiously remove the following parts. To help prevent spraying or splashing of pressurized fluids, hold a rag over the part that is being removed.

- Filler caps

- Grease fittings
- Pressure taps
- Breathers
- Drain plugs

Use caution when cover plates are removed. Gradually loosen, but do not remove the last two bolts or nuts that are located at opposite ends of the cover plate or the device. Before removing the last two bolts or nuts, pry the cover loose to relieve any spring pressure or other pressure.

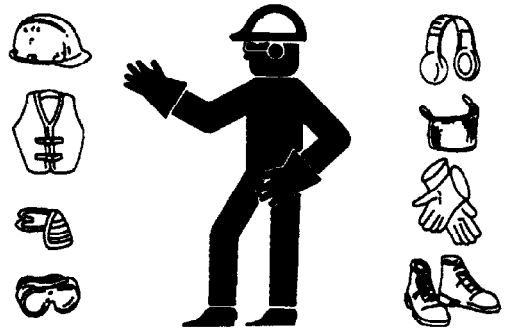

Illustration 9 g00702020

- Wear a hard hat, protective glasses, and other protective equipment, as required.
- When work is performed around an engine that is operating, wear protective devices for ears to help prevent damage to hearing.
- Do not wear loose clothing or jewelry that can snag on controls or on other parts of the engine.
- Ensure that all protective guards and all covers are secured in place on the engine.
- Never put maintenance fluids into glass containers. Glass containers can break.
- Use all cleaning solutions with care.
- Report all necessary repairs.

Unless other instructions are provided, perform the maintenance under the following conditions:

- The engine is stopped. Ensure that the engine cannot be started.
- Disconnect the batteries when maintenance is performed or when the electrical system is serviced. Disconnect the battery ground leads. Tape the leads to help prevent sparks.
- Do not attempt any repairs that are not understood. Use the proper tools. Replace any equipment that is damaged or repair the equipment.

Pressurized Air and Water

Pressurized air and/or water can cause debris and/or hot water to be blown out. This action could result in personal injury.

When pressurized air and/or pressurized water is used for cleaning, wear protective clothing, protective shoes, and eye protection. Eye protection includes goggles or a protective face shield.

The maximum air pressure for cleaning purposes must be below 205 kPa (30 psi). The maximum water pressure for cleaning purposes must be below 275 kPa (40 psi).

Fluid Penetration

Pressure can be trapped in the hydraulic circuit long after the engine has been stopped. The pressure can cause hydraulic fluid or items such as pipe plugs to escape rapidly if the pressure is not relieved correctly.

Do not remove any hydraulic components or parts until pressure has been relieved or personal injury may occur. Do not disassemble any hydraulic components or parts until pressure has been relieved or personal injury may occur. Refer to the OEM information for any procedures that are required to relieve the hydraulic pressure.

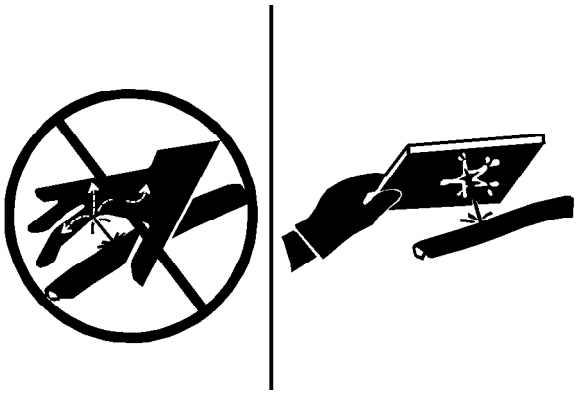

Illustration 10 g00687600

Always use a board or cardboard when you check for a leak. Leaking fluid that is under pressure can penetrate body tissue. Fluid penetration can cause serious injury and possible death. A pin hole leak can cause severe injury. If fluid is injected into your skin, you must get treatment immediately. Seek treatment from a doctor that is familiar with this type of injury.

Containing Fluid Spillage

Care must be taken to ensure that fluids are contained during performance of inspection, maintenance, testing, adjusting, and repair of the product. Be prepared to collect the fluid with suitable containers before opening any compartment or disassembling any component containing fluids.

Dispose of all fluids according to local regulations and mandates.

Static Electricity Hazard when Fueling with Ultra-low Sulfur Diesel Fuel

The removal of sulfur and other compounds in ultra-low sulfur diesel fuel (ULSD fuel) decreases the conductivity of ULSD and increases the ability of ULSD to store static charge. Refineries may have treated the fuel with a static dissipating additive. Many factors can reduce the effectiveness of the additive over time. Static charges can build up in ULSD fuel while the fuel is flowing through fuel delivery systems. Static electricity discharge when combustible vapors are present could result in a fire or explosion. Ensure that the entire system used to refuel your machine (fuel supply tank, transfer pump, transfer hose, nozzle, and others) is properly grounded and bonded. Consult with your fuel or fuel system supplier to ensure that the delivery system complies with fueling standards for proper grounding and bonding.

⚠ WARNING

Avoid static electricity risk when fueling. Ultra-low sulfur diesel fuel (ULSD fuel) poses a greater static ignition hazard than earlier diesel formulations with a higher sulfur contents. Avoid death or serious injury from fire or explosion. Consult with your fuel or fuel system supplier to ensure the delivery system is in compliance with fueling standards for proper grounding and bonding practices.

Inhalation

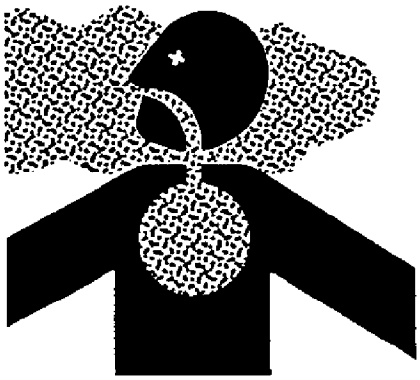

Illustration 11 g00702022

Exhaust

Use caution. Exhaust fumes can be hazardous to health. If you operate the equipment in an enclosed area, adequate ventilation is necessary.

Hexavalent Chromium

Perkins equipment and replacement parts comply with applicable regulations and requirements where originally sold. Perkins recommends the use of only genuine Perkins replacement parts.

Hexavalent chromium has occasionally been detected on exhaust and heat shield systems on Perkins engines. Although laboratory testing is the only accurate way to know if hexavalent chromium is, in fact, present, the presence of a yellow deposit in areas of high heat (for example, exhaust system components or exhaust insulation) may be an indication of the presence of hexavalent chromium.

Use caution if you suspect the presence of hexavalent chromium. Avoid skin contact when handling items that you suspect may contain hexavalent chromium, and avoid inhalation of any dust in the suspect area. Inhalation of, or skin contact with, hexavalent chromium dust may be hazardous to your health.

If such yellow deposits are found on the engine, engine component parts, or associated equipment or packages, Perkins recommends following local health and safety regulations and guidelines, utilizing good hygiene, and adhering to safe work practices when handling the equipment or parts. Perkins also recommends the following:

- Wear appropriate Personal Protective Equipment (PPE)
- Wash your hands and face with soap and water prior to eating, drinking, or smoking, and also during rest room breaks, to prevent ingestion of any yellow powder
- Never use compressed air for cleaning areas suspected of containing hexavalent chromium
- Avoid brushing, grinding, or cutting materials suspected of containing hexavalent chromium
- Obey environmental regulations for the disposal of all materials that may contain or have come into contact with hexavalent chromium
- Stay away from areas that might have hexavalent chromium particles in the air.

Asbestos Information

Perkins equipment and replacement parts that are shipped from Perkins engine company limited are asbestos free. Perkins recommends the use of only genuine Perkins replacement parts. Use the following guidelines when you handle any replacement parts that contain asbestos or when you handle asbestos debris.

Use caution. Avoid inhaling dust that might be generated when you handle components that contain asbestos fibers. Inhaling this dust can be hazardous to your health. The components that may contain asbestos fibers are brake pads, brake bands, lining material, clutch plates, and some gaskets. The asbestos that is used in these components is usually bound in a resin or sealed in some way. Normal handling is not hazardous unless airborne dust that contains asbestos is generated.

If dust that may contain asbestos is present, there are several guidelines that should be followed:

- Never use compressed air for cleaning.
- Avoid brushing materials that contain asbestos.
- Avoid grinding materials that contain asbestos.
- Use a wet method to clean up asbestos materials.
- A vacuum cleaner that is equipped with a high efficiency particulate air filter (HEPA) can also be used.
- Use exhaust ventilation on permanent machining jobs.
- Wear an approved respirator if there is no other way to control the dust.
- Comply with applicable rules and regulations for the work place. In the United States, use Occupational Safety and Health Administration (OSHA) requirements. These OSHA requirements can be found in “29 CFR 1910.1001”.
- Obey environmental regulations for the disposal of asbestos.
- Stay away from areas that might have asbestos particles in the air.

Dispose of Waste Properly

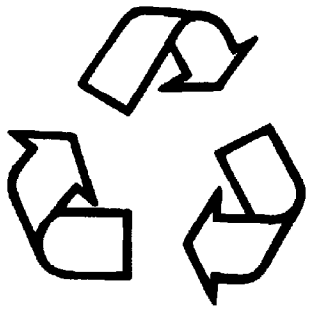

Illustration 12 g00706404

Improperly disposing of waste can threaten the environment. Potentially harmful fluids should be disposed of according to local regulations.

Always use leakproof containers when you drain fluids. Do not pour waste onto the ground, down a drain, or into any source of water.

i06106969

Burn Prevention

Coolant

When the engine is at operating temperature, the engine coolant is hot. The coolant is also under pressure. The radiator and all lines to the heaters or to the engine contain hot coolant. Any contact with hot coolant or with steam can cause severe burns. Allow cooling system components to cool before the cooling system is drained.

Check that the coolant level after the engine has stopped and the engine has been allowed to cool. Ensure that the filler cap is cool before removing the filler cap. The filler cap must be cool enough to touch with a bare hand. Remove the filler cap slowly in order to relieve pressure.

Cooling system conditioner contains alkali. Alkali can cause personal injury. Do not allow alkali to contact the skin, the eyes, or the mouth.

Oils

Skin may be irritated following repeated or prolonged exposure to mineral and synthetic base oils. Refer to your suppliers Material Safety Data Sheets for detailed information. Hot oil and lubricating components can cause personal injury. Do not allow hot oil to contact the skin. Appropriate personal protective equipment should be used.

Diesel Fuel

Diesel may be irritating to the eyes, respiratory system, and skin. Prolonged exposure to diesel may cause various skin conditions. Appropriate personal protective equipment should be used. Refer to supplier Material safety Data sheets for detailed information.

Batteries

The liquid in a battery is an electrolyte. Electrolyte is an acid that can cause personal injury. Do not allow electrolyte to contact the skin or the eyes.

Do not smoke while checking the battery electrolyte levels. Batteries give off flammable fumes which can explode.

Always wear protective glasses when you work with batteries. Wash hands after touching batteries. The use of gloves is recommended.

i05945996

Fire Prevention and Explosion Prevention

Illustration 13 g00704000

All fuels, most lubricants, and some coolant mixtures are flammable.

Flammable fluids that are leaking or spilled onto hot surfaces or onto electrical components can cause a fire. Fire may cause personal injury and property damage.

After the emergency stop button is operated, ensure that you allow 15 minutes, before the engine covers are removed.

Determine whether the engine will be operated in an environment that allows combustible gases to be drawn into the air inlet system. These gases could cause the engine to overspeed. Personal injury, property damage, or engine damage could result.

If the application involves the presence of combustible gases, consult your Perkins dealer and/or your Perkins distributor for additional information about suitable protection devices.

Remove all flammable combustible materials or conductive materials such as fuel, oil, and debris from the engine. Do not allow any flammable combustible materials or conductive materials to accumulate on the engine.

Store fuels and lubricants in correctly marked containers away from unauthorized persons. Store oily rags and any flammable materials in protective containers. Do not smoke in areas that are used for storing flammable materials.

Do not expose the engine to any flame.

Exhaust shields (if equipped) protect hot exhaust components from oil or fuel spray in case of a line, a tube, or a seal failure. Exhaust shields must be installed correctly.

Do not weld on lines or tanks that contain flammable fluids. Do not flame cut lines or tanks that contain flammable fluid. Clean any such lines or tanks thoroughly with a nonflammable solvent prior to welding or flame cutting.

Wiring must be kept in good condition. Ensure that all electrical wires are correctly installed and securely attached. Check all electrical wires daily. Repair any wires that are loose or frayed before you operate the engine. Clean all electrical connections and tighten all electrical connections.

Eliminate all wiring that is unattached or unnecessary. Do not use any wires or cables that are smaller than the recommended gauge. Do not bypass any fuses and/or circuit breakers.

Arcing or sparking could cause a fire. Secure connections, recommended wiring, and correctly maintained battery cables will help to prevent arcing or sparking.

Ensure that the engine is stopped. Inspect all lines and hoses for wear or for deterioration. Ensure that the hoses are correctly routed. The lines and hoses must have adequate support and secure clamps.

Oil filters and fuel filters must be installed correctly. The filter housings must be tightened to the correct torque. Refer to the Disassembly and Assembly manual for more information.

Illustration 14 g00704059

Use caution when you are refueling an engine. Do not smoke while you are refueling an engine. Do not refuel an engine near open flames or sparks. Always stop the engine before refueling.

Avoid static electricity risk when fueling. Ultra-low Sulfur Diesel fuel (ULSD fuel) poses a greater static ignition hazard than earlier diesel formulations with a higher sulfur content. Avoid death or serious injury from fire or explosion. Consult your fuel or fuel system supplier to ensure that the delivery system is in compliance with fueling standards for proper grounding and bonding practices.

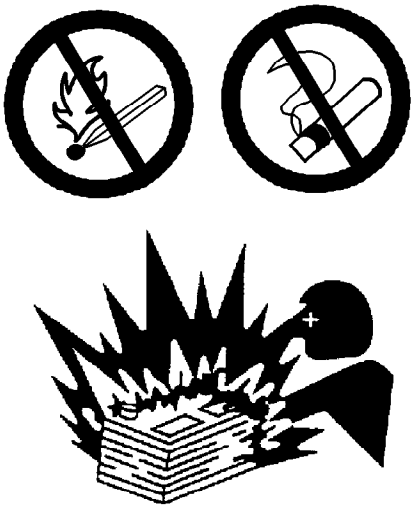

Illustration 15 g00704135

Gases from a battery can explode. Keep any open flames or sparks away from the top of a battery. Do not smoke in battery charging areas.

Never check the battery charge by placing a metal object across the terminal posts. Use a voltmeter or a hydrometer.

Incorrect jumper cable connections can cause an explosion that can result in injury. Refer to the Operation Section of this manual for specific instructions.

Do not charge a frozen battery. A frozen battery may cause an explosion.

The batteries must be kept clean. The covers (if equipped) must be kept on the cells. Use the recommended cables, connections, and battery box covers when the engine is operated.

Fire Extinguisher

Make sure that a fire extinguisher is available. Be familiar with the operation of the fire extinguisher. Inspect the fire extinguisher and service the fire extinguisher regularly. Obey the recommendations on the instruction plate.

Ether

Ether is flammable and poisonous.

Do not smoke while you are replacing an ether cylinder or while you are using an ether spray.

Do not store ether cylinders in living areas or in the engine compartment. Do not store ether cylinders in direct sunlight or in temperatures above 49° C (120° F). Keep ether cylinders away from open flames or sparks.

Lines, Tubes, and Hoses

Do not bend high-pressure lines. Do not strike high-pressure lines. Do not install any lines that are damaged.

Leaks can cause fires. Consult your Perkins dealer or your Perkins distributor for replacement parts.

Replace the parts if any of the following conditions are present:

- End fittings are damaged or leaking.
- Outer coverings are chafed or cut.
- Wires are exposed.
- Outer coverings are ballooning.
- Flexible parts of the hoses are kinked.
- Outer covers have embedded armoring.
- End fittings are displaced.

Make sure that all clamps, guards, and heat shields are installed correctly. During engine operation, correct installation will help to prevent vibration, rubbing against other parts, and excessive heat.

i02143194

Crushing Prevention and Cutting Prevention

Support the component correctly when work beneath the component is performed.

Unless other maintenance instructions are provided, never attempt adjustments while the engine is running.

Stay clear of all rotating parts and of all moving parts. Leave the guards in place until maintenance is performed. After the maintenance is performed, reinstall the guards.

Keep objects away from moving fan blades. The fan blades will throw objects or cut objects.

When objects are struck, wear protective glasses in order to avoid injury to the eyes.

Chips or other debris may fly off objects when objects are struck. Before objects are struck, ensure that no one will be injured by flying debris.

i05875651

Mounting and Dismounting

Do not climb on the engine. The engine has not been designed with mounting or dismounting locations.

Refer to the OEM for the location of foot and hand holds for your specific application.

i07243229

High Pressure Fuel Lines

WARNING

Contact with high pressure fuel may cause fluid penetration and burn hazards. High pressure fuel spray may cause a fire hazard. Failure to follow these inspection, maintenance and service instructions may cause personal injury or death.

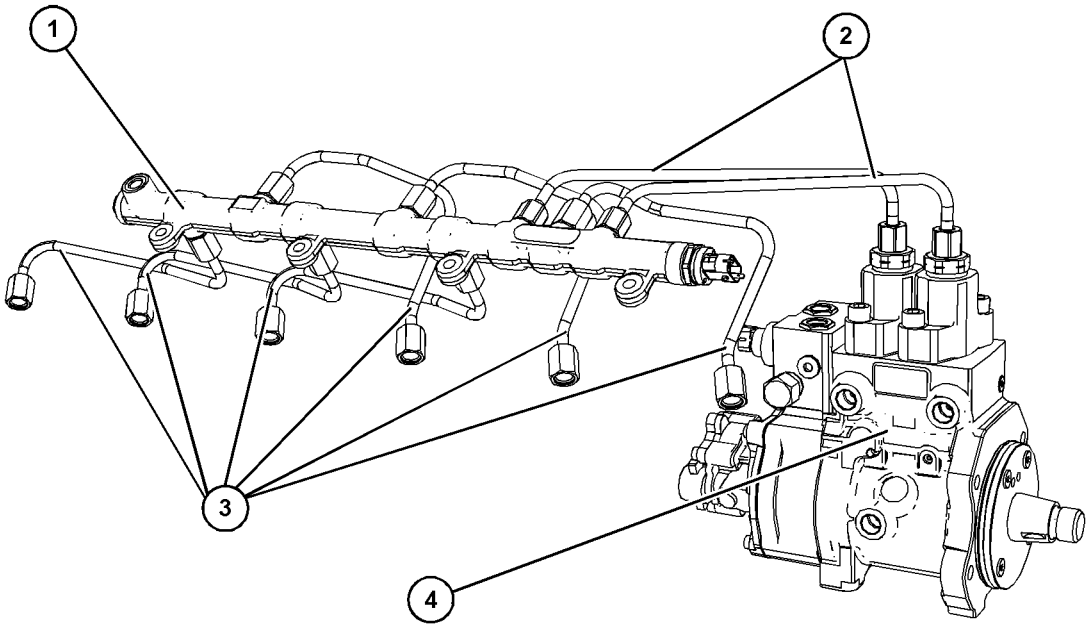

Illustration 16 g06263148

(1) High-pressure fuel manifold (rail)
(2) Fuel transfer lines that are high pressure
(3) High-pressure lines to injectors
(4) High-pressure fuel pump

The high-pressure fuel lines are the fuel lines that are between the high-pressure fuel pump and the high-pressure fuel manifold. Also, the fuel lines that are between the fuel manifold and cylinder head. These fuel lines are different from fuel lines on other fuel systems.

The fuel lines are different is because of the following items:

- The high-pressure fuel lines are constantly charged with high pressure.
- The internal pressures of the high-pressure fuel lines are higher than other types of fuel system.
- The high-pressure fuel lines are formed to shape and then strengthened by a special process.

Do not step on the high-pressure fuel lines. Do not deflect the high-pressure fuel lines. Do not bend or strike the high-pressure fuel lines. Deformation or damage of the high-pressure fuel lines may cause a point of weakness and potential failure.

Do not check the high-pressure fuel lines with the engine or the starting motor in operation. After the engine has stopped, you must wait for 10 minutes to allow the fuel pressure to be purged from the high-pressure fuel lines before any service or repair is performed on the engine fuel lines. The 10 minute wait will also allow static charge to dissipate from the low-pressure fuel system.

Do not loosen the high-pressure fuel lines to remove air from the fuel system. This procedure is not required.

Visually inspect the high-pressure fuel lines before the engine is started. This inspection should be each day.

If you inspect the engine in operation, always use the proper inspection procedure to avoid a fluid penetration hazard. Refer to Operation and Maintenance Manual, “General hazard Information”.

- Inspect the high-pressure fuel lines for damage, deformation, a nick, a cut, a crease, or a dent.

- Do not operate the engine with a fuel leak. If there is a leak, do not tighten the connection, to stop the leak. The connection must only be tightened to the recommended torque. Refer to Disassembly and Assembly, “Fuel injection lines - Remove and Fuel injection lines - Install”.
- If the high-pressure fuel lines are torqued correctly and the high-pressure fuel lines are leaking, the high-pressure fuel lines must be replaced.
- Ensure that all clips on the high-pressure fuel lines are in place. Do not operate the engine with clips that are damaged, missing, or loose.
- Do not attach any other item to the high-pressure fuel lines.
- Loosened high-pressure fuel lines must be replaced. Also removed high-pressure fuel lines must be replaced. Refer to Disassembly and assembly manual, “Fuel Injection Lines - Install”.

i04257031

Before Starting Engine

NOTICE
For initial start-up of a new or rebuilt engine, and for start-up of an engine that has been serviced, make provision to shut the engine off should an overspeed occur. This may be accomplished by shutting off the air and/or fuel supply to the engine.

WARNING

Engine exhaust contains products of combustion which may be harmful to your health. Always start and operate the engine in a well ventilated area and, if in an enclosed area, vent the exhaust to the outside.

Inspect the engine for potential hazards.

Do not start the engine or move any of the controls if there is a “DO NOT OPERATE” warning tag or similar warning tag attached to the start switch or to the controls.

Before starting the engine, ensure that no one is on, underneath, or close to the engine. Ensure that the area is free of personnel.

If equipped, ensure that the lighting system for the engine is suitable for the conditions. Ensure that all lights work properly, if equipped.

All protective guards and all protective covers must be installed if the engine must be started in order to perform service procedures. To help prevent an accident that is caused by parts in rotation, work around the parts carefully.

Do not start an engine when the governor linkage is disconnected.

Do not bypass the automatic shutoff circuits. Do not disable the automatic shutoff circuits. The circuits are provided in order to help prevent personal injury. The circuits are also provided in order to help prevent engine damage.

i07828827

Engine Starting

WARNING

Do not use aerosol types of starting aids such as ether. Such use could result in an explosion and personal injury.

WARNING

Engine exhaust contains products of combustion which may be harmful to your health. Always start and operate the engine in a well ventilated area and, if in an enclosed area, vent the exhaust to the outside.

If a warning tag is attached to the engine start switch or to the controls, DO NOT start the engine or move the controls. Consult with the person that attached the warning tag before the engine is started.

All protective guards and all protective covers must be installed if the engine must be started to perform service procedures. To help prevent an accident that is caused by parts in rotation, work around the parts carefully.

Start the engine from the operator's compartment or from the engine start switch.

Always start the engine according to the procedure that is described in the Operation and Maintenance Manual, “Engine Starting” topic in the Operation Section. Knowing the correct procedure will help to prevent major damage to the engine components. Knowing the procedure will also help to prevent personal injury.

To ensure that the jacket water heater (if equipped) is working correctly, check the water temperature gauge and/or the oil temperature gauge during the heater operation.

Note: The engine may be equipped with a device for cold starting. If the engine will be operated in very cold conditions, then an extra cold starting aid may be required. Normally, the engine will be equipped with the correct type of starting aid for your region of operation.

i11140351

Engine Stopping

- Remove the load in increments.
- Open the circuit breaker.
- Allow the engine to run for five minutes to cool.
- Stop the engine.
- Ensure 24V is supplied to the dosing cabinet for at least 120 seconds after engine shutdown (engines equipped with SCR systems only).

Use the Emergency Stop Button (if equipped) ONLY in an emergency situation. Do not use the Emergency Stop Button for normal engine stopping. After an emergency stop, DO NOT start the engine until the problem that caused the emergency stop has been corrected.

Stop the engine if an overspeed condition occurs during the initial start-up of a new engine or an engine that has been overhauled. This may be accomplished by shutting off the fuel supply to the engine and/or shutting off the air supply to the engine.

To stop an electronically controlled engine, cut the power to the engine.

Cybersecurity Information

The engine control and electrical systems specified in these instructions utilize an open CAN bus (or MODBUS) communication protocol as the integration point with the machine's control system. Because these are open communication systems, they may be vulnerable to cyber attacks if an individual gains physical access to the engine's wiring or electrical connection points.

If equipped, the control logic for the Air Shut Off Valve (ASOV) is classified as a safety channel under the EU Machinery Regulation 2023/1230. This software channel meets the “protection against corruption” requirements for digitally controlled safety channels - except that some software versions will require the engine installer to record any changes to the channel parameters and retain these records for no less than 5 years when an ASOV is installed.

All other engine control and electrical systems are not intended to act as safety channels and do not claim compliance with the Machinery Regulation's cybersecurity requirements.

Check with the engine installer and yourPerkins Distributor for additional information.

Reporting Cybersecurity Vulnerabilities

If a potential cybersecurity vulnerability related to this product, its embedded software, or associated digital components is identified, please report it using the following contact website:

https://customer.perkins.com/en/product-support/report-potential-security-vulnerabilities.html

i06088340

Electrical System

Never disconnect any charging unit circuit or battery circuit cable from the battery when the charging unit is operating. A spark can cause the combustible gases that are produced by some batteries to ignite.

To help prevent sparks from igniting combustible gases that are produced by some batteries, the negative “–” jump-start cable should be connected last from the external power source to the negative “–” terminal of the starting motor. If the starting motor is not equipped with a negative “–” terminal, connect the jump-start cable to the engine block.

Check the electrical wires daily for wires that are loose or frayed. Tighten all loose electrical wires before the engine is started. Repair all frayed electrical wires before the engine is started. Refer to the “Engine Starting” section of this Operation and Maintenance Manual for specific starting instructions.

Grounding Practices

Proper grounding for the engine electrical system is necessary for optimum engine performance and reliability. Improper grounding will result in uncontrolled electrical circuit paths and in unreliable electrical circuit paths.

Uncontrolled electrical circuit paths can result in damage to main bearings, to crankshaft bearing journal surfaces, and to aluminum components.

Engines that are installed without engine-to-frame ground straps can be damaged by electrical discharge.

To ensure that the engine and the engine electrical systems function properly, an engine-to-frame ground strap with a direct path to the battery must be used. This path may be provided by way of a starting motor ground, a starting motor ground to the frame, or a direct engine ground to the frame.

All grounds should be tight and free of corrosion. The engine alternator must be grounded to the negative "-" battery terminal with a wire that is adequate to handle the full charging current of the alternator.

i06091234

Engine Electronics

WARNING

Tampering with the electronic system installation or the OEM wiring installation can be dangerous and could result in personal injury or death and/or engine damage.

This engine has a comprehensive, programmable Engine Monitoring System. The Engine Control Module (ECM) will monitor the engine operating conditions. If any of the engine parameters extend outside an allowable range, the ECM will initiate an immediate action.

The following actions are available for engine monitoring control: WARNING, DERATE and SHUTDOWN. These engine monitoring modes can limit engine speed and/or the engine power.

Many of the parameters that are monitored by the ECM can be programmed for the engine monitoring functions. The following parameters can be monitored as a part of the Engine Monitoring System:

- Operating Altitude
- Engine Coolant Level
- Engine Coolant Temperature
- Engine Oil Pressure
- Engine Speed
- Fuel Temperature
- Intake Manifold Air Temperature
- System Voltage

The Engine Monitoring package can vary for different engine models and different engine applications. However, the monitoring system and the engine monitoring control will be similar for all engines.

Note: Many of the engine control systems and display modules that are available for Perkins Engines will work in unison with the Engine Monitoring System. Together, the two controls will provide the engine monitoring function for the specific engine application. Refer to the Troubleshooting Manual for more information.

Product Information Section

Model Views

i07542235

Model View Illustrations

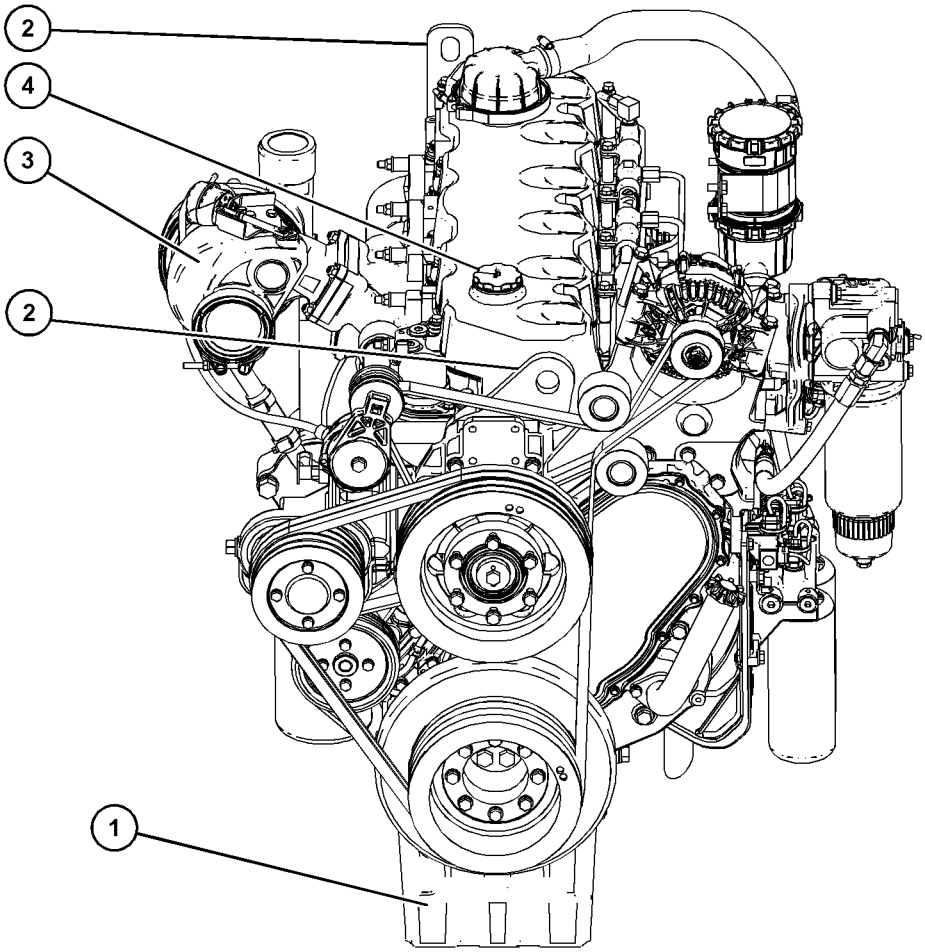

Illustration 17 g06275201

Typical Engine

(1) Oil pan
(2) Lifting eyes
(3) Turbocharger
(4) Oil cap

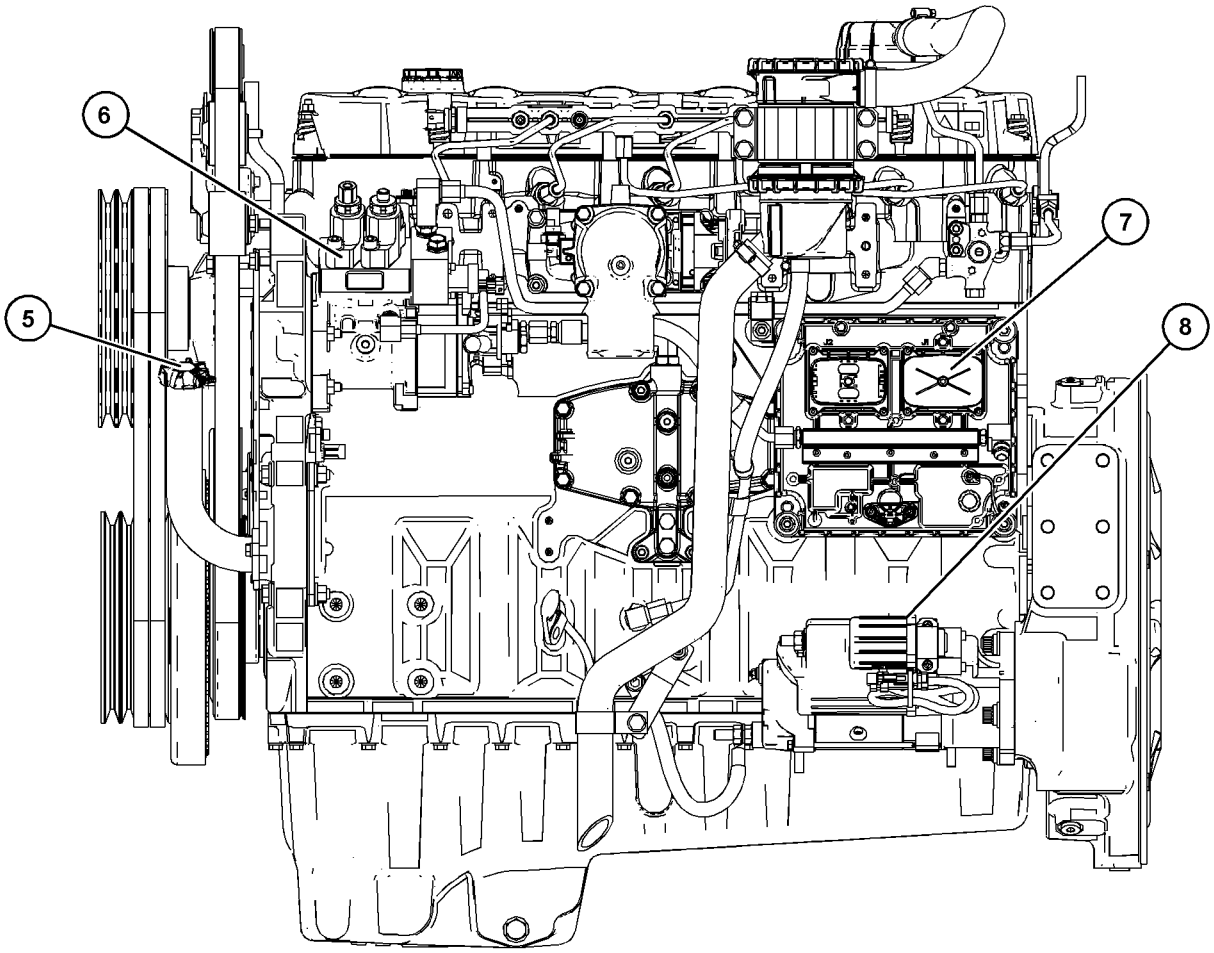

Illustration 18 g06275205

Typical Engine

(5) Oil filler tube
(6) Fuel Injection pump
(7) Electronic Control module (ECM)
(8) Starting motor

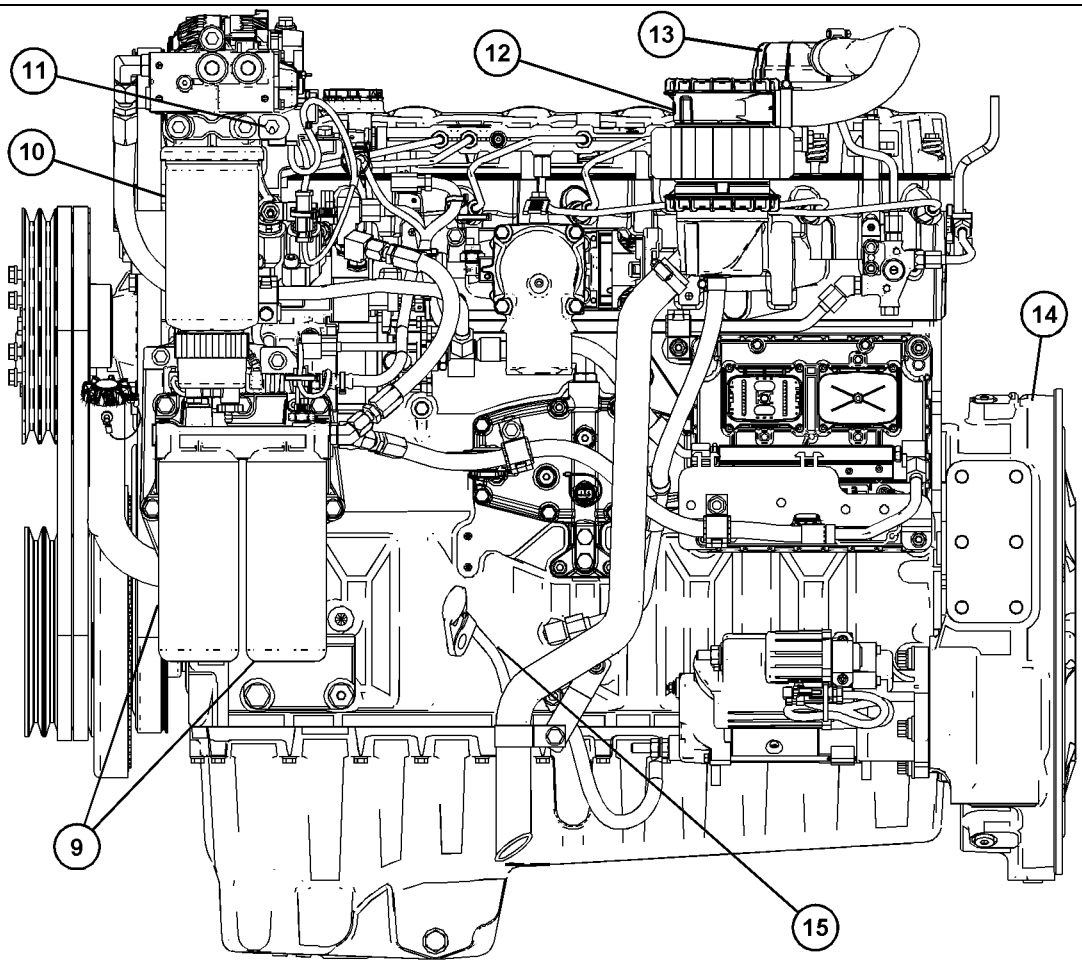

Illustration 19 g06275226

Typical Engine

(9) Secondary fuel filters
(10) Primary fuel filter/ water separator
(11) Fuel pump switch assembly
(12) Crankcase ventilation filter
(13) Crankcase breather
(14) Flywheel housing
(15) Oil dipstick

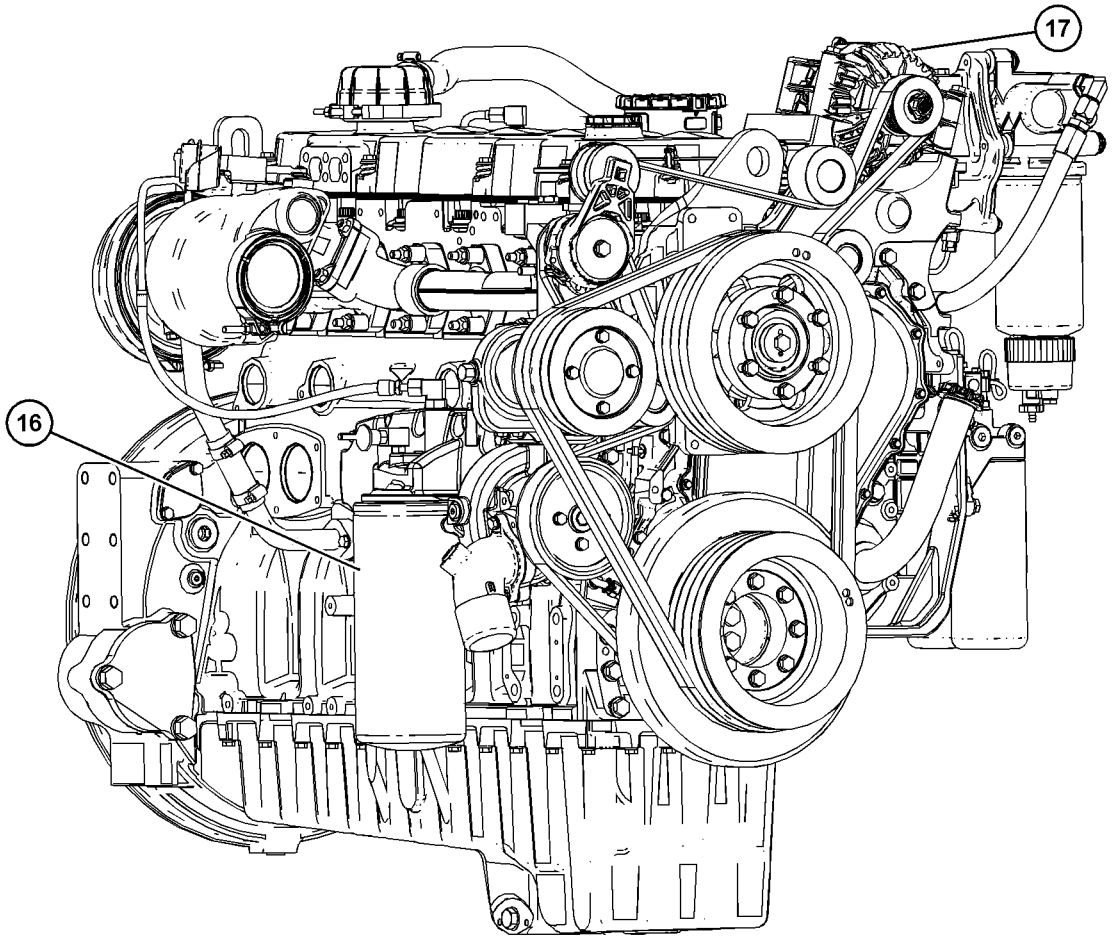

Illustration 20 g06275229

Typical Engine

(16) Oil filter (17) Alternator

Product Identification Information

i07542444

Plate Locations and Film Locations

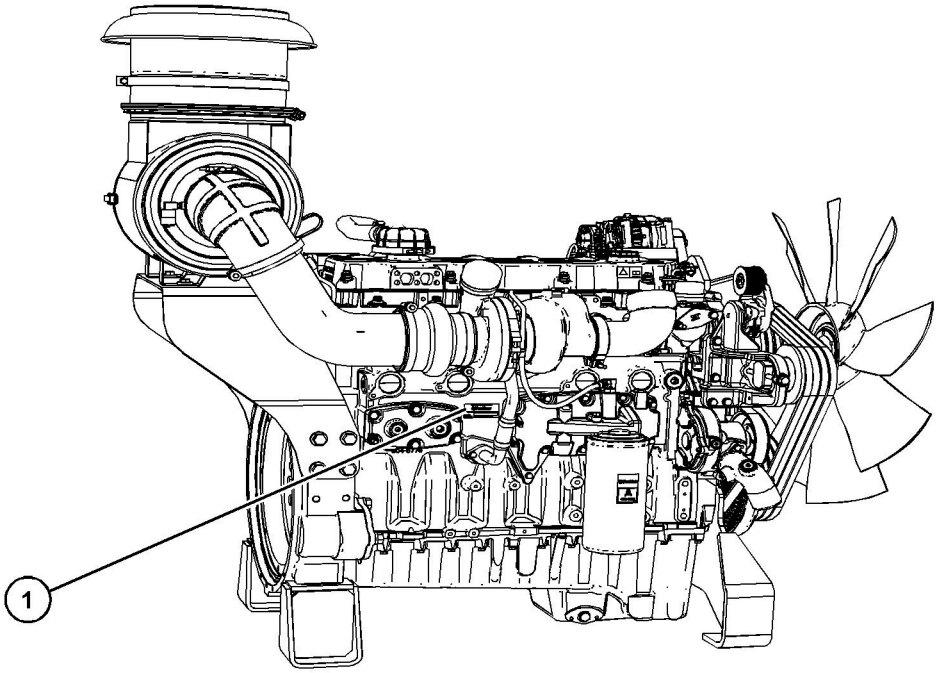

Illustration 21 g06354253

Typical example

(1) Engine serial number plate location

Viewed from the rear of the engine, the serial number plate is on the right side of the cylinder block below the turbocharger.

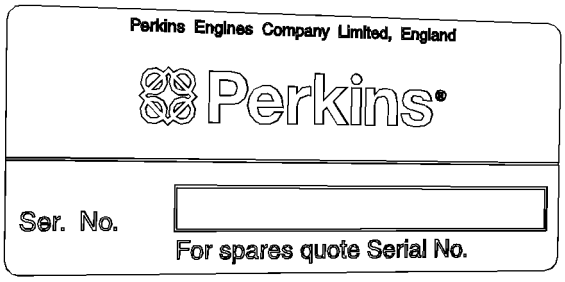

Illustration 22 g06263197

Serial number plate

The following information is stamped on the serial number plate: engine serial number, engine model, and arrangement number.

The engine information plate is located toward the rear of the valve cover. The engine information plate may be read from the right side of the engine.

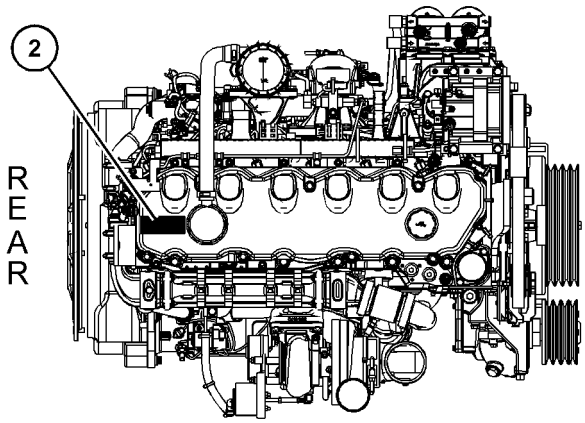

Illustration 23 g06251082

Typical example

(2) Engine information plate

i05951816

Emissions Certification Film

Note: This information is pertinent in the United States, in Canada and in Europe.

The emissions label is located on the top of the valve mechanism cover.

Operation Section

Lifting and Storage

i07544338

Product Lifting

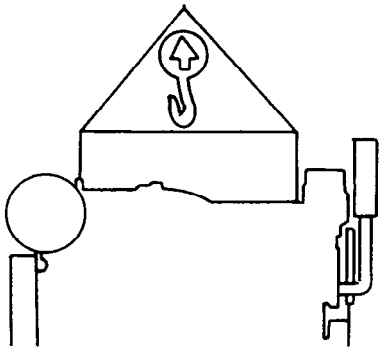

Illustration 24 g00103219

NOTICE
Never bend the eyebolts and the brackets. Only load the eyebolts and the brackets under tension. Remember that the capacity of an eyebolt is less as the angle between the supporting members and the object becomes less than 90 degrees.

When it is necessary to remove a component at an angle, only use a link bracket that is properly rated for the weight.

NOTICE
Always inspect lifting eyebolts and all other lifting equipment for damage before performing any lifting. Never bend the eyebolts and the brackets. Never perform product lifting if components are damaged.

Use a hoist to remove heavy components. Use an adjustable lifting beam to lift the engine. All supporting members (chains and cables) should be parallel to each other. The chains and cables should be perpendicular to the top of the object that is being lifted.

Some removals require lifting the fixtures to obtain proper balance and safety.

To remove the engine ONLY, use the lifting eyes that are on the engine.

Lifting eyes are designed and installed for the specific engine arrangement. Alterations to the lifting eyes and/or the engine make the lifting eyes and the lifting fixtures obsolete. If alterations are made, ensure that proper lifting devices are provided. Consult your Perkins dealer for information regarding fixtures for proper engine lifting.

Engine

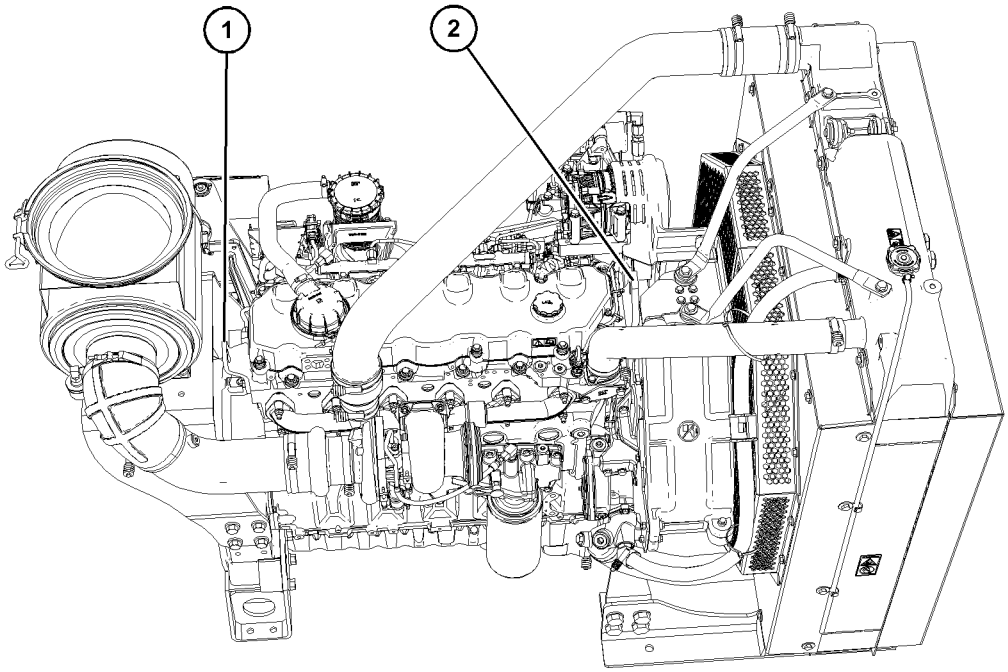

Illustration 25 g06354789

Typical example

(1) Rear lifting eye (2) Front lifting eye

Follow the safety instructions for the selected tool to ensure a safe lift.

Remove any ATAAC lines, air cleaners, or other attachments that would otherwise interfere with the lift chains or other lifting devises.

The engine package center of gravity will change depending on the engine attachments. Adjust the spreader bar and chains as necessary to maintain a lift within 5 degrees of horizontal in all directions.

Remove the front load ring before returning the engine to service, to prevent the last load ring from rubbing on the fan belt.

Engine and Installed Radiator Only

The engine lifting eyes are rated to lift an engine with attached radiator, assuming a less than 5 degree tilt angle can be maintained. Be sure to use an appropriate spreader set so that lifting chains are perpendicular to the engine.

Radiator Only

Detach the radiator, and mounting bracket at the engine front support. Add eyebolts or lifting brackets to the threaded holes marked for lifting.

i06109969

Product Storage

Your Perkins distributor can assist in preparing the engine for extended storage periods.

An engine can be stored for up to 6 months provided all the recommendation are adhered to.

Engine

1. Clean the engine of any dirt, rust, grease, and oil. Inspect the exterior. Paint areas that contain paint damage with a good quality paint.
2. Remove dirt from the air cleaners. Check all seals, gaskets, and the filter element for damage.
3. Apply lubricant to all points in this Operation and Maintenance Manual, “Maintenance Interval Schedule”.
4. Drain the crankcase oil. Replace the crankcase oil and change the oil filters. For the proper procedure, refer to this Operation and Maintenance Manual.
5. Add VCI oil to the crankcase oil. The volume of VCI oil in the crankcase oil should be 3 to 4 percent.

Note: If the engine crankcase is full, drain enough engine oil so the mixture can be added.

6. Remove the air filter elements. Turn the engine at cranking speed with the throttle control in FUEL OFF position. Use a sprayer to add a mixture of 50 percent VCI oil and 50 percent engine oil into the air inlet or turbocharger inlet.

Note: The mixture of VCI oil can be added to the inlet by removing the plug for checking turbocharger boost pressure. The minimum application rate for the VCI oil mixture is 5.5 mL per L (3 oz per 1000 cu in) of engine displacement.

7. Use a sprayer to apply a mixture of 50 percent VCI oil and 50 percent crankcase oil into the exhaust openings. The minimum application rate for the oil mixture is 5.5 mL per L (3 oz per 1000 cu in) of engine displacement. Seal the exhaust pipe and seal any drain holes in the muffler.
8. Remove the fuel from the secondary fuel filter housing. Alternately, empty and reinstall the spin-on fuel filter element in order to remove any dirt and water. Drain any sleeve metering fuel pump.

   Clean the primary fuel filter. Fill with calibration fluid or kerosene. Install the primary fuel filter and operate the priming pump. This procedure will send clean oil to the secondary filter and the engine.

   Open the fuel tank drain valve in order to drain any water and dirt from the fuel tank. Apply a spray of calibration fluid or kerosene at the rate of 30 mL per 30 L (1 oz per 7.50 gal US) of fuel tank capacity in order to prevent rust in the fuel tank. Add 0.15 mL per L (.02 oz per 1 gal US) of commercial biocide such as Biobor JF to the fuel.

   Apply a small amount of oil to the threads on the fuel tank filler neck and install the cap. Seal all openings to the tank in order to prevent evaporation of the fuel and as a preservative.
9. Remove the fuel injectors. Apply 30 mL (1 oz) of the mixture of oils (50 percent VCI oil and 50 percent engine oil) into each cylinder.

   Use a bar or a turning tool in order to turn over the engine slowly. This procedure puts the oil on the cylinder walls. Install all fuel injectors and tighten to the correct torque. Refer to Disassembly and Assembly Manual for more information.
10. Spray a thin amount of a mixture of 50 percent VCI oil and 50 percent engine oil onto the following components: flywheel, ring gear teeth and starter pinion. Install the covers in order to prevent evaporation of the vapors from the VCI oil.
11. Apply a heavy amount of Multipurpose Grease to all outside parts that move, such as rod threads, ball joints, linkage.

Note: Install all covers. Ensure that tape has been installed over all openings, air inlets, exhaust openings, the flywheel housing, the crankcase breathers, the dipstick tubes.

Ensure that all covers are airtight and weatherproof. Use a waterproof weather resistant tape such as Kendall No. 231 or an equivalent. Do not use duct tape. Duct tape will only seal for a short time.

12. Under most conditions, removing the batteries is the best procedure. As an alternative, place the batteries in storage. As needed, periodically charge the batteries while the batteries are in storage.

If the batteries are not removed, wash the tops of the batteries until the tops are clean. Apply an electrical charge to the batteries in order to obtain a specific gravity of 1.225.

Disconnect the battery terminals. Place a plastic cover over the batteries.

13. Remove the drive belts from the engine

14. Place a waterproof cover over the engine. Ensure that the engine cover is secure. The cover should be loose enough to allow air to circulate around the engine in order to prevent damage from condensation.

15. Attach a tag with the storage date to the engine.

16. Remove the waterproof cover at 2 month or 3 month intervals in order to check the engine for corrosion. If the engine has signs of corrosion, repeat the protection procedure.

Coolant System

Completely fill the cooling system before storage.

Refer to this Operation and Maintenance Manual, “Fluid Recommendations” for more information about coolants.

Remove Engine from Storage

1. Remove all outside protective covers.

2. Change the oil and filters.

3. Check the condition of the fan and alternator belts. Replace the belts, if necessary. Refer to this Operation and Maintenance Manual, “Belts - Inspect/Adjust/Replace” for the correct procedure.

4. Replace the fuel filter elements.

5. Remove the plastic covers from the air cleaner elements.

6. Use a bar or a turning tool in order to turn the engine in the normal direction of rotation. The procedure ensures that no hydraulic locks or resistance exist.

7. Before starting the engine, remove the valve cover or covers. Put a large amount of engine oil on the camshaft, cam followers, and valve mechanism in order to prevent damage to the mechanism.

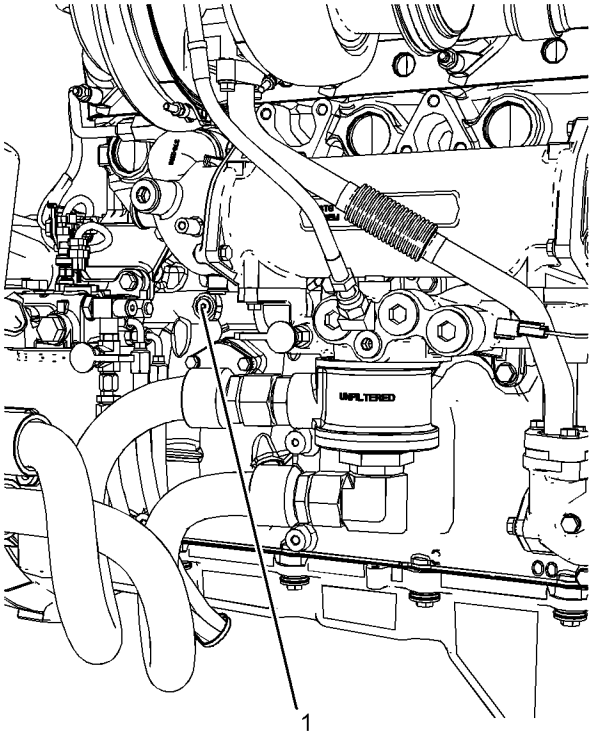

Illustration 26 g03862125

Typical example

(1) plug

8. If an engine is stored for more than 1 year, Perkins recommends Pre lubrication of the engine in order to avoid dry starting. Use a suitable pump in order to put engine oil into the engine oil system.

The pump will need to create a minimum pressure within the engine of 0.25 bar (3.6 psi). This pressure is needed for 15 seconds in order to lubricate the internal surfaces.

Remove of the plug shown in illustration 26 in order to connect to the engine oil system. The connection required is 9/16" x 18 tpi. Ensure that the correct oil specification is used, refer to this Operation and Maintenance Manual, “Fluid Recommendations” for more information. After the engine internal surfaces have been lubricated, remove connector and install plug (1). Tighten plug to a torque of 30 N·m (265 lb in). Perkins recommends that the procedure must be performed in a minimum ambient temperature of 10° C (50° F).

9. Check the condition of all rubber hoses. Replace any worn hoses. Replace any damaged hoses.

10. Before start-up, test the cooling system for a 3 percent to a 6 percent concentration of coolant conditioner. Add liquid coolant conditioner or a coolant conditioner element, if equipped.

Test the coolant mixture for proper nitrite level. If necessary, adjust the coolant mixture.

Prime the engine with clean diesel fuel before starting.

11. Ensure that the cooling system is clean. Ensure that the system is full. Ensure that the system has the correct amount of supplemental cooling system conditioner.

12. On the first day of operation, check the entire engine several times for leaks and correct operation.

Features and Controls

i07542558

Control Panel
(If Equipped)

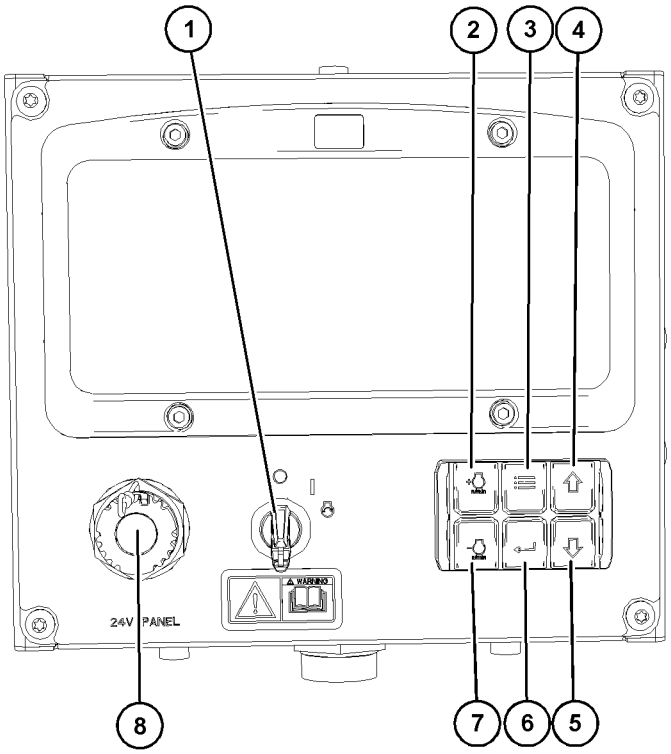

Illustration 27 g06354653

(1) “Key switch”
(2) “Increase engine speed”
(3) “Menu”
(4) “Up arrow”
(5) “Down arrow”
(6) “Enter”
(7) “Decrease engine speed”
(8) “Diagnostic connection”

Note: The control panel may be installed on the left-hand side of the engine.

Engine Diagnostics

i05194988

Self-Diagnostics

Perkins Electronic Engines have the capability to perform a self-diagnostics test. When the system detects an active problem, a diagnostic lamp is activated. Diagnostic codes will be stored in permanent memory in the Electronic Control Module (ECM). The diagnostic codes can be retrieved by using Perkins electronic service tools.

Some installations have electronic displays that provide direct readouts of the engine diagnostic codes. Refer to the manual that is provided by the OEM for more information on retrieving engine diagnostic codes.

Active codes represent problems that currently exist. These problems should be investigated first.

Logged codes represent the following items:

- Intermittent problems
- Recorded events
- Performance history

The problems may have been repaired since the logging of the code. These codes do not indicate that a repair is needed. The codes are guides or signals when a situation exists. Codes may be helpful to troubleshoot problems.

When the problems have been corrected, the corresponding logged fault codes should be cleared.

i03554520

Diagnostic Lamp

A diagnostic lamp is used to indicate the existence of an active fault. A fault diagnostic code will remain active until the problem is repaired. The diagnostic code may be retrieved by using the electronic service tool.

i01902949

Fault Logging

The system provides the capability of Fault Logging. When the Electronic Control Module (ECM) generates an active diagnostic code, the code will be logged in the memory of the ECM. The codes that have been logged by the ECM can be identified by the electronic service tool. The active codes that have been logged will be cleared when the fault has been rectified or the fault is no longer active. The following logged faults can not be cleared from the memory of the ECM without using a factory password: Overspeed, low engine oil pressure and high engine coolant temperature.

i03554534

Engine Operation with Active Diagnostic Codes

If a diagnostic lamp illuminates during normal engine operation, the system has identified a situation that is not within the specification. Use electronic service tools to check the active diagnostic codes.

Note: If the customer has selected “DERATE” and if there is a low oil pressure condition, the Electronic Control Module (ECM) will limit the engine power until the problem is corrected. If the oil pressure is within the normal range, the engine may be operated at the rated speed and load. However, maintenance should be performed as soon as possible.

The active diagnostic code should be investigated. The cause of the problem should be corrected as soon as possible. If the cause of the active diagnostic code is repaired and there is only one active diagnostic code, the diagnostic lamp will turn off.

Operation of the engine and performance of the engine can be limited as a result of the active diagnostic code that is generated. Acceleration rates may be significantly slower. Refer to the Troubleshooting Guide for more information on the relationship between these active diagnostic codes and engine performance.

i01797063

Engine Operation with Intermittent Diagnostic Codes

If a diagnostic lamp illuminates during normal engine operation and the diagnostic lamp shuts off, an intermittent fault may have occurred. If a fault has occurred, the fault will be logged into the memory of the Electronic Control Module (ECM).

In most cases, it is not necessary to stop the engine because of an intermittent code. However, the operator should retrieve the logged fault codes and the operator should reference the appropriate information in order to identify the nature of the event. The operator should log any observation that could have caused the lamp to light.

- Low power
- Limits of the engine speed
- Excessive smoke, etc

This information can be useful to help troubleshoot the situation. The information can also be used for future reference. For more information on diagnostic codes, refer to the Troubleshooting Guide for this engine.

i06225055

Configuration Parameters

The engine electronic control module (ECM) has two types of configuration parameters. The system configuration parameters and the customer specified parameters.

The electronic service tool is required in order to alter the configuration parameters.

System Configuration Parameters

System configuration parameters affect the emissions of the engine or the power of the engine. System configuration parameters are programmed at the factory. Normally, system configuration parameters would never require changing through the life of the engine. System configuration parameters must be reprogrammed if an ECM is replaced. System configuration parameters do not require reprogrammed if the ECM software is changed. Factory passwords are required to change these parameters.

For more information on system configuration parameters and customer specified parameters, refer to Troubleshooting manual.

Engine Starting

i02109067

Before Starting Engine

Perform the required daily maintenance and other periodic maintenance before the engine is started. Inspect the engine compartment. This inspection can help prevent major repairs at a later date. Refer to the Operation and Maintenance Manual, “Maintenance Interval Schedule” for more information.

- For the maximum service life of the engine, make a thorough inspection before the engine is started. Look for the following items: oil leaks, coolant leaks, loose bolts and trash buildup. Remove trash buildup and arrange for repairs, as needed.
- Inspect the aftercooler for loose connections and for debris buildup.
- Inspect the cooling system hoses for cracks and for loose clamps.
- Inspect the alternator and accessory drive belts for cracks, breaks, and other damage.
- Inspect the wiring for loose connections and for worn wires or frayed wires.
- Check the fuel supply. Drain water from the water separator (if equipped). Open the fuel supply valve.

NOTICE
All valves in the fuel return line must be open before and during engine operation to help prevent high fuel pressure. High fuel pressure may cause filter housing failure or other damage.

If the engine has not been started for several weeks, fuel may have drained from the fuel system. Air may have entered the filter housing. Also, when fuel filters have been changed, some air pockets will be trapped in the engine. In these instances, prime the fuel system. Refer to the Operation and Maintenance Manual, “Fuel System - Prime” for more information on priming the fuel system.

WARNING

Engine exhaust contains products of combustion which may be harmful to your health. Always start and operate the engine in a well ventilated area and, if in an enclosed area, vent the exhaust to the outside.

- Do not start the engine or move any of the controls if there is a “DO NOT OPERATE” warning tag or similar warning tag attached to the start switch or to the controls.
- Ensure that the areas around the rotating parts are clear.
- All of the guards must be put in place. Check for damaged guards or for missing guards. Repair any damaged guards. Replace damaged guards and/or missing guards.
- Disconnect any battery chargers that are not protected against the high current drain that is created when the electric starting motor (if equipped) is engaged. Check electrical cables and check the battery for poor connections and for corrosion.
- Reset all of the shutoffs or alarm components.
- Check the engine lubrication oil level. Maintain the oil level between the “ADD” mark and the “FULL” mark on the oil level gauge.
- Check the coolant level. Observe the coolant level in the coolant recovery tank (if equipped). Maintain the coolant level to the “FULL” mark on the coolant recovery tank.
- If the engine is not equipped with a coolant recovery tank maintain the coolant level within 13 mm (0.5 inch) of the bottom of the filler pipe. If the engine is equipped with a sight glass, maintain the coolant level in the sight glass.
- Observe the air cleaner service indicator (if equipped). Service the air cleaner when the yellow diaphragm enters the red zone, or when the red piston locks in the visible position.
- Ensure that any driven equipment has been disengaged. Minimize electrical loads or remove any electrical loads.

i06092648

Starting the Engine

WARNING

Engine exhaust contains products of combustion which may be harmful to your health. Always start and operate the engine in a well ventilated area and, if in an enclosed area, vent the exhaust to the outside.

Starting the Engine

Refer to the Owners Manual of the OEM for your type of controls. Use the following procedure to start the engine.

1. Place the transmission in NEUTRAL. Disengage the flywheel clutch in order to allow the engine to start faster, and to reduce the draining of the battery.

2. Turn the ignition switch to the ON position.

During the key on, all warning lamps will illuminate for a few seconds, in order to test the circuits. If any lamps do not illuminate, check the bulbs and replace as necessary.

NOTICE

Do not engage the starting motor when flywheel is turning. Do not start the engine under load.

If the engine fails to start within 30 seconds, release the starter switch or button and wait two minutes to allow the starting motor to cool before attempting to start the engine again.

3. Push the start button or turn the ignition switch to the START position in order to crank the engine.

Do not push down or hold the throttle down while the engine is cranked. The system will automatically provide the correct amount of fuel that is needed to start the engine.

4. If the engine fails to start within 30 seconds, release the start button, or the ignition switch. Wait for 2 minutes in order to allow the starting motor to cool before attempting to start the engine again.

NOTICE

Oil pressure should rise within 15 seconds after the engine starts. Do not increase engine rpm until the oil pressure gauge indicates normal. If oil pressure is not indicated on the gauge within 15 seconds, DO NOT operate the engine. STOP the engine, investigate and correct the cause.

5. Allow the engine to idle for approximately 3 minutes. Idle the engine until the water temperature gauge has begun to rise. Check all gauges during the warm-up period.

Note: Oil pressures and fuel pressures should be in the normal range on the instrument panel. Engines that are equipped with “WARNING” lamps do not have an operating range. The “WARNING and DIAGNOSTIC” lamp (if equipped) will flash while the engine is cranking. The lamp should turn off after proper engine oil pressure or fuel pressure is achieved. Do not apply a load to the engine or increase engine rpm until the oil pressure gauge indicates at least normal pressure. Inspect the engine for leaks and/or unusual noises.

If the engine is operated with a low load, the engine will reach normal operating temperature sooner than idling the engine with no load. When the engine is idled in cold weather, increase the engine rpm to approximately 1000 to 1200 rpm in order to raise engine temperature. Do not exceed the recommended rpm in order to increase the speed of the warm-up. Limit unnecessary idle time to 10 minutes.

Starting Problems

An occasional starting problem may be caused by one of the following items:

- Low battery charge
- Lack of fuel
- Problem with the wiring harness

If the engine fuel system has been run dry, fill the fuel tank and prime the fuel system. Refer to the Operation and Maintenance Manual, “Fuel System - Prime” topic (Maintenance Section).

If the other problems are suspected, perform the appropriate procedure in order to start the engine.

Problems with the Wiring Harness

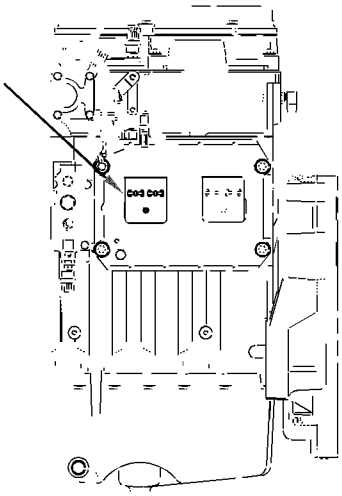

Illustration 28 g01248812
ECM Connector J2/P2

Locate the ECM. Check the connector in order to ensure that the connector is secure. Lightly pull each of the wires in the chassis harness.

1. Pull each wire with approximately 4.5 kg (10 lb) of force. The wire should remain in the connector.
2. If a wire is loose, push the wire back into the connector. Pull the wire again in order to ensure that the wire is secure.
3. Start the engine. If the engine does not start, check for a diagnostic code and consult your Perkins distributor.

i04132731

Cold Weather Starting

Startability will be improved at temperatures below 10°C (50°F) from the use of a cylinder block coolant heater or from other means that are used to heat the crankcase oil. Some engine applications use a jacket water heater to improve startability. Use of a jacket water heater will help reduce white smoke and misfire during start-up in cold weather.

Note: If the engine has not been run for several weeks, fuel may have drained. Air may have moved into the filter housing. Also, when fuel filters have been changed, some air will be left in the filter housing. Refer to the Operation and Maintenance Manual, “Fuel System - Prime” (Maintenance Section) for more information on priming the fuel system.

Ether Injection System (If Equipped)

The ether injection system is controlled by the ECM. The ECM monitors the coolant temperature, intake air temperature, ambient air temperature, and barometric pressure to determine when ether injection is needed. At sea level, ether will be used if any of the temperatures fails to exceed 0° C (32° F). This temperature is subject to an increase as barometric pressure increases.

⚠ WARNING

Personal injury or property damage can result from alcohol or starting fluids.

Alcohol or starting fluids are highly flammable and toxic and if improperly stored could result in injury or property damage.

Follow the procedure in this Operation and Maintenance Manual, “Starting the Engine”.

i08717341

Starting with Jump Start Cables

(Do Not Use This Procedure in Hazardous Locations that have Explosive Atmospheres)

⚠ WARNING

The connection of battery cables to a battery and the disconnection of battery cables from a battery may cause an explosion which may result in injury or death. The connection and the disconnection of other electrical equipment may also cause an explosion which may result in injury or death. The procedures for the connection and the disconnection of battery cables and other electrical equipment should only be performed in a nonexplosive atmosphere.

WARNING

Improper jump start cable connections can cause an explosion resulting in personal injury.

Prevent sparks near the batteries. Sparks could cause vapors to explode. Do not allow jump start cable ends to contact each other or the engine.

Note: If possible, first diagnose the reason for the starting failure. Refer to Troubleshooting, “Engine Will Not Crank and Engine Cranks But Will Not Start” for further information. Make any necessary repairs. If the engine will not start only due to the condition of the battery, either charge the battery, or start the engine by using another battery with jump-start cables. The condition of the battery can be rechecked after the engine has been switched OFF.

NOTICE
Never attempt to start an engine from an external power source such as electric welding equipment, which has a voltage that is unsuitable for engine starting and will damage the electrical system.

NOTICE
Using a battery source with the same voltage as the electric starting motor. Use ONLY equal voltage for jump starting. The use of higher voltage will damage the electrical system.

Do not reverse the battery cables. The alternator can be damaged. Attach ground cable last and remove first.

Turn all electrical accessories OFF before attaching the jump start cables.

Ensure that the main power switch is in the OFF position before attaching the jump start cables to the engine being started.

1. Turn the start switch on the stalled engine to the OFF position. Turn off all the engines accessories.
2. Connect one positive end of the jump-start cable to the positive cable terminal of the discharged battery. Connect the other positive end of the jump-start cable to the positive cable terminal of the electrical source.
3. Connect one negative end of the jump-start cable to the negative cable terminal of the electrical source. Connect the other negative end of the jump-start cable to the engine block or to the chassis ground. This procedure helps to prevent potential sparks from igniting the combustible gases that are produced by some batteries.

Note: The engine ECM must be powered before the starting motor is operated or damage can occur.

4. Start the engine in the normal operating procedure. Refer to this Operation and Maintenance Manual, “Starting the Engine”.
5. Immediately after the engine is started, disconnect the jump-start cables in reverse order.

After jump starting, the alternator may not be able to recharge fully batteries that are severely discharged. The batteries must be replaced or charged to the proper voltage with a battery charger after the engine is stopped. Many batteries which are considered unusable are still rechargeable. Refer to Operation and Maintenance Manual, “Battery - Replace” and Testing and Adjusting Manual, “Battery - Test”.

i05359363

After Starting Engine

Note: In temperatures from 0 to 60°C (32 to 140°F), the warm-up time is approximately 3 minutes. In temperatures below 0°C (32°F), additional warm-up time may be required.

When the engine is idling during warm-up, observe the following conditions:

- Check for fluid or air leaks at idle rpm and at one-half full rpm (no load on the engine) before operating the engine under load. Operating the engine at idle and at one-half full rpm with no load is not possible in some applications.
- Operate the engine at low idle until all systems achieve operating temperatures. Check all gauges during the warm-up period.

Note: Gauge readings should be observed and the data should be recorded frequently while the engine is operating. Comparing the data over time will help to determine normal readings for each gauge. Comparing data over time will also help detect abnormal operating developments. Significant changes in the readings should be investigated.

Extended Idle at Cold Ambient Temperature

The engine may automatically change speeds when the engine is idling in cold ambient temperatures (typically less than 0° C (32° F) for extended periods. The purpose of the automatic speed change is threefold: to maintain the desired operation of the NOx reduction system, to maintain the desired operation of the regeneration system and to keep the engine coolant warm. The engine speed may rise to 1600 rpm for as long as 20 minutes.

The high exhaust system temperature lamp may illuminate during extended idling conditions. This illumination signals that a diesel particulate filter (DPF) regeneration is in progress. Regenerations during cold ambient extended idling may only last up to 10 minutes.

Engine Operation

i04038637

Engaging the Driven Equipment

1. Operate the engine at one-half of the rated rpm, when possible.
2. Engage the driven equipment without a load on the equipment, when possible.

   Interrupted starts put excessive stress on the drive train. Interrupted starts also waste fuel. To get the driven equipment in motion, engage the clutch smoothly with no load on the equipment. This method should produce a start that is smooth and easy. The engine rpm should not increase and the clutch should not slip.
3. Ensure that the ranges of the gauges are normal when the engine is operating at one-half of the rated rpm. Ensure that all gauges operate properly.
4. Increase the engine rpm to the rated rpm. Always increase the engine rpm to the rated rpm before the load is applied.
5. Apply the load. Begin operating the engine at low load. Check the gauges and equipment for proper operation. After normal oil pressure is reached and the temperature gauge begins to move, the engine may be operated at full load. Check the gauges and equipment frequently when the engine is operated under load.

   Extended operation at low idle or at reduced load may cause increased oil consumption and carbon buildup in the cylinders. This carbon buildup results in a loss of power and/or poor performance.

i07677865

Fuel Conservation Practices

The efficiency of the engine can affect the fuel economy. Perkins design and technology in manufacturing provides maximum fuel efficiency in all applications. Follow the recommended procedures to attain optimum performance for the life of the engine.

- Avoid spilling fuel.

Fuel expands when it is warmed up. The fuel may overflow from the fuel tank. Inspect fuel lines for leaks. Repair the fuel lines, as needed.

- Be aware of the properties of different fuels. Use only the recommended fuels. Refer to the Operations and Maintenance Manual, “Fuel Recommendations” for further information.
- Avoid unnecessary idling.

Shut off the engine rather than allowing the engine to idle for long periods of time.

- Observe the service indicator frequently. Keep the air cleaner elements clean.
- Ensure that the turbocharger is operating correctly. For more information refer to this Operation and Maintenance Manual, “Turbocharger - Inspect”
- Maintain a good electrical system.

One faulty battery cell will overwork the alternator. This fault will consume excess power and excess fuel.

- The belt should be in good condition. Refer to the Systems Operation, Testing and Adjusting, “V-Belt Test” for further information.
- Ensure that all the connections of the hoses are tight. The connections should not leak.
- Ensure that the driven equipment is in good working order.
- Cold engines consume excess fuel. Utilize heat from the jacket water system and the exhaust system, when possible. Keep cooling system components clean and keep cooling system components in good repair. Never operate the engine without water temperature regulators. All these items will help maintain operating temperatures.

Engine Stopping

i02572824

Manual Stop Procedure

Stopping the Engine

NOTICE
Stopping the engine immediately after it has been working under load, can result in overheating and accelerated wear of the engine components.

Avoid accelerating the engine prior to shutting it down.

Avoiding hot engine shutdowns will maximize turbocharger shaft and bearing life.

Note: Individual applications will have different control systems. Ensure that the shutoff procedures are understood. Use the following general guidelines in order to stop the engine.

1. Remove the load from the engine. Allow the engine to run under no load conditions for five minutes in order to cool the engine.
2. Stop the engine after the cool down period according to the shutoff system on the engine and turn the ignition keyswitch to the OFF position. If necessary, refer to the instructions that are provided by the OEM.

Emergency Stopping

NOTICE
Emergency shutoff controls are for EMERGENCY use ONLY. DO NOT use emergency shutoff devices or controls for normal stopping procedure.

The OEM may have equipped the application with an emergency stop button. For more information about the emergency stop button, refer to the OEM information.

Ensure that any components for the external system that support the engine operation are secured after the engine is stopped.

i02583411

After Stopping Engine

Note: Before you check the engine oil, do not operate the engine for at least 10 minutes in order to allow the engine oil to return to the oil pan.

- Check the crankcase oil level. Maintain the oil level between the “LOW” mark and the “HIGH” mark on the oil level gauge.

Note: Only use oil that is recommended in this Operation and Maintenance Manual, “Fluid Recommendations”. Failure to use the recommended oil may result in engine damage.

- If necessary, perform minor adjustments. Repair any leaks and tighten any loose bolts.
- Note the service hour meter reading. Perform the maintenance that is in the Operation and Maintenance Manual, “Maintenance Interval Schedule”.
- Fill the fuel tank in order to help prevent accumulation of moisture in the fuel. Do not overfill the fuel tank.
- Allow the engine to cool. Check the coolant level. Maintain the cooling system at 13 mm (0.5 inch) from the bottom of the pipe for filling.

Note: Only use coolant that is recommended in this Operation and Maintenance Manual, “Fluid Recommendations”. Failure to use the recommended oil may result in engine damage.

- If freezing temperatures are expected, check the coolant for proper antifreeze protection. The cooling system must be protected against freezing to the lowest expected outside temperature. Add the proper coolant/water mixture, if necessary.
- Perform all required periodic maintenance on all driven equipment. This maintenance is outlined in the instructions from the OEM.

Cold Weather Operation

i05954317

Radiator Restrictions

Perkins discourages the use of airflow restriction devices that are mounted in front of radiators. Airflow restriction can cause the following conditions:

- High exhaust temperatures
- Power loss
- Excessive fan usage
- Reduction in fuel economy

If an airflow restriction device must be used, the device should have a permanent opening directly in line with the fan hub. The device must have a minimum opening dimension of at least 770 cm^2 (120 in^2).

A centered opening that is directly in line with the fan hub is specified in order to prevent an interrupted airflow on the fan blades. Interrupted airflow on the fan blades could cause a fan failure.

Perkins recommends a warning device for the inlet manifold temperature and/or the installation of an inlet air temperature gauge. The warning device for the inlet manifold temperature should be set at 75 °C (167 °F). The inlet manifold air temperature should not exceed 75 °C (167 °F). Temperatures that exceed this limit can cause power loss and potential engine damage.

i07818744

Fuel and the Effect from Cold Weather

Note: Only use grades of fuel that are recommended by Perkins. Refer to this Operation and Maintenance Manual, “Fluid Recommendations”.

Properties of the diesel fuel can have a significant effect on the engine cold start capability. It is critical that the low temperature properties of diesel fuel are acceptable for the minimum ambient temperature the engine is expected to see in operation.

Following properties are used to define fuels low temperature capability:

- Cloud point
- Pour point
- Cold Filter Plugging Point (CFPP)

The cloud point of the fuel is the temperature at which waxes naturally found in the diesel fuel begin to form crystals. The cloud point of the fuel must be below lowest ambient temperature to prevent filters from plugging.

Pour point is the last temperature before the fuel flow stops and waxing of the fuel will start.

Cold Filter Plugging Point (CFPP) is a temperature at which a particular fuel will pass through a standardized filtration device. This CFPP gives an estimate of the lower operability temperature of fuel

Be aware of these properties when diesel fuel is purchased. Consider the average ambient air temperature for the engines application. Engines that are fueled in one climate may not operate well if the engines are shipped to colder climate. Problems can result due to changes in temperature.

Before troubleshooting for low power or for poor performance in the winter, check the fuel for waxing

The following components can provide a means of minimizing fuel waxing problems in cold weather:

- Fuel heaters, which may be an OEM option
- Fuel line insulation, which may be an OEM option

Winter and arctic grades of diesel fuel are available in the countries and territories with severe winters. For more information refer to the Operation and Maintenance Manual, “Fuel For Cold-Weather Operation”

Another important fuel property which can affect cold start and operation of diesel engine is Cetane number. Detail and requirements of this property are given in this Operation and Maintenance Manual, “Fluid Recommendations”.

i06093465

Fuel Related Components in Cold Weather

Fuel Tanks

Condensation can form in partially filled fuel tanks. Top off the fuel tanks after operating the engine.

Fuel tanks should contain some provision for draining water and sediment from the bottom of the tanks. Some fuel tanks use supply pipes that allow water and sediment to settle below the end of the fuel supply pipe.

Some fuel tanks use supply lines that take fuel directly from the bottom of the tank. If the engine is equipped with this system, regular maintenance of the fuel system filter is important.

Drain the water and sediment from any fuel storage tank at the following intervals:

- Weekly
- Oil changes
- Refueling of the fuel tank

This draining will help prevent water and/or sediment from being pumped from the fuel storage tank and into the engine fuel tank.

Fuel Heaters

Fuel heaters help to prevent fuel filters from plugging in cold weather due to waxing. A fuel heater should be installed in order for the fuel to be heated before the fuel enters the primary fuel filter.

Select a fuel heater that is mechanically simple, yet adequate for the application. The fuel heater should also help to prevent overheating of the fuel. High fuel temperatures reduce engine performance and the availability of engine power. Choose a fuel heater with a large heating surface. The fuel heater should be practical in size. Small heaters can be too hot due to the limited surface area.

Disconnect the fuel heater in warm weather.

Note: Fuel heaters that are controlled by the water temperature regulator or self-regulating fuel heaters should be used with this engine. Fuel heaters that are not controlled by the water temperature regulator can heat the fuel in excess of 65° C (149° F). A loss of engine power can occur if the fuel supply temperature exceeds 37° C (100° F).

Note: Heat exchanger type fuel heaters should have a bypass provision in order to prevent overheating of the fuel in warm-weather operation.

For further information on fuel heaters, consult your Perkins distributor .

Maintenance Section

Refill Capacities

i07536312

Refill Capacities

Refer to this Operation and Maintenance Manual, “Fluid Recommendations” for information about the fluids which are acceptable for this engine.

Lubricant Refill Capacities

The refill capacities for the engine crankcase reflect the approximate capacity of the crankcase or sump plus standard oil filters. Auxiliary oil filter systems will require more oil. Refer to the Original Equipment Manufacturer (OEM) specifications for the capacity of the auxiliary oil filter.

Table 1

1706A and 1706D Industrial Engine Approximate Refill Capacities		
System	**Liters**	**Quarts**
Oil Sump(1)	32	33.8

(1) These values are approximate capacities for the crankcase oil sump which include the standard oil filters that are installed at the factory. Engines with auxiliary oil filters will require more oil. Refer to the OEM specifications for the capacity of the auxiliary oil filter.

Coolant Refill Capacities

To maintain the cooling system, the total cooling system capacity must be known. The capacity of the total cooling system will vary. The capacity will depend on the size of the radiator (capacity). Table 2 should be completed by the customer for the maintenance of the cooling system.

Table 2

Approximate Capacity of the Cooling System		
Compartment or System	Liters	Quarts
Total Cooling System(1)		

(continued)

(Table 2, contd)

(1) The total cooling system capacity includes the following components: the engine block, the radiator, and all coolant hoses and lines.

i07329421

Fluid Recommendations (General Fuel Information)

- **Glossary**
- ISO International Standards Organization
- ASTM American Society for Testing and Materials
- HFRR High Frequency Reciprocating Rig for Lubricity testing of diesel fuels
- FAME Fatty Acid Methyl Esters
- CFR Co-ordinating Fuel Research
- LSD Low Sulfur Diesel
- ULSD Ultra Low Sulfur Diesel
- RME Rape Methyl Ester
- SME Soy Methyl Ester
- EPA Environmental Protection Agency of the United States

General Information

NOTICE
Every attempt is made to provide accurate, up-to-date information. By use of this document you agree that Perkins Engines Company Limited is not responsible for errors or omissions.

NOTICE
These recommendations are subject to change without notice. Contact your local Perkins distributor for the most up-to-date recommendations.

Diesel Fuel Requirements

Perkins is not in a position to evaluate continuously and monitor all worldwide distillate diesel fuel specifications that are published by governments and technological societies.

Perkins Specification for Distillate Diesel Fuel in table 3 provides a known reliable baseline to judge the expected performance of distillate diesel fuels that are derived from conventional sources.

Satisfactory engine performance depends on the use of a good quality fuel. The use of a good quality fuel will give the following results: long engine life and acceptable exhaust emissions levels. The fuel must meet the minimum requirements that are stated in table 3 .

NOTICE
The footnotes are a key part of the Perkins Specification for Distillate Diesel Fuel Table. Read ALL of the footnotes.

Table 3

Perkins Specification for Distillate Diesel Fuel				
Property	**UNITS**	**Requirements**	**"ASTM Test"**	**"ISO Test"**
Aromatics	%Volume	35% maximum	**"D1319"**	"ISO 3837"
Ash	%Weight	0.01% maximum	**"D482"**	"ISO 6245"
Carbon Residue on 10% Bottoms	%Weight	0.35% maximum	**"D524"**	"ISO 4262"
Cetane Number (1)	-	40 minimum	**"D613 or D6890"**	"ISO 5165"
Cloud Point	°C	The cloud point must not exceed the lowest expected ambient temperature.	**"D2500"**	"ISO 3015"
Copper Strip Corrosion	-	No. 3 maximum	**"D130"**	"ISO 2160"
Distillation	°C	10% at 282 °C (539.6 °F) maximum 90% at 360 °C (680 °F) maximum	**"D86"**	"ISO 3405"
Density at 15 °C (59 °F) (2)	Kg / M^3	800 minimum and 860 maximum	No equivalent test	"ISO 3675" or "ISO 12185"
Flash Point	°C	legal limit	**"D93"**	"ISO 2719"
Thermal Stability	-	Minimum of 80% reflectance after aging for 180 minutes at 150 °C (302 °F)	**"D6468"**	No equivalent test
Pour Point	°C	6 °C (10°F) Minimum below ambient temperature	**"D97"**	"ISO 3016"
Sulfur	%mass	(3)	**"D5453 or /D2622"**	"ISO 20846" or "ISO 20884"
Kinematic Viscosity (4)	"MM^2/S (cSt)"	The viscosity of the fuel that is delivered to the fuel injection pump. "1.4 minimum and /4.5 maximum"	**"D445"**	"ISO 3405"
Water and sediment	% weight	0.05% maximum	**"D1796"**	"ISO 3734"
Water	% weight	0.02% maximum	**"D1744"**	No equivalent test
Sediment	% weight	0.05% maximum	**"D473"**	"ISO 3735"
Gums and Resins (5)	mg/100mL	10 mg per 100 mL maximum	**"D381"**	"ISO 6246"

(continued)

(Table 3, contd)

Lubricity corrected wear scar diameter at 60 °C (140 °F). (6)	mm	0.52 maximum	**“D6079”**	“ISO 12156-1”
Fuel cleanliness (7)	-	“ISO”18/16/13	**“7619”**	“ISO 4406”
Oxidation Stability	g/m^3	Maximum 25	**“D2274”**	“ISO 12205”
	Hours (8)	Minimum 20	-	“EN 15751”

(1) In order to insure minimum cetane number of 40 a distillate diesel fuel should have minimum cetane index of 44 when ASTM D4737 test method is used. A fuel with a higher cetane number is recommended to operate at a higher altitude or in cold weather.
(2) Density range allowed includes summer and winter diesel fuel grades. Fuel density varies depending on the sulfur level where high sulfur fuels have higher densities. Some unblended alternative fuels have lower densities which are acceptable, if all the other properties meet this specification.
(3) Regional regulations, national regulations, or international regulations can require a fuel with a specific sulfur limit. Consult all applicable regulations before selecting a fuel for a given engine application. LSD fuel with less than 0.05 percent (≤ 500 ppm (mg/kg)) sulfur is recommended for use in these engine models. Diesel fuel with more than 0.05 percent (≥ 500 ppm (mg/kg)) sulphur can be used only where allowed by legislation. Fuel sulfur levels affect exhaust emissions. High sulfur fuels also increase the potential for corrosion of internal components. Fuel sulfur levels above 0.05% may significantly shorten the oil change interval. For additional information, refer to **General lubricant Information**.
(4) The values of the fuel viscosity are the values as the fuel is delivered to the fuel injection pumps. Fuel should also meet the minimum viscosity requirement and the fuel should meet the maximum viscosity requirements at 40° C (104° F) of either the "ASTM D445" test method or the "ISO 3104" test method. If a fuel with a low viscosity is used, cooling of the fuel may be required to maintain 1.4 cSt or greater viscosity at the fuel injection pump. Fuels with a high viscosity might require fuel heaters to lower the viscosity to 4.5 cSt at the fuel injection pump.
(5) Follow the test conditions and procedures for gasoline (motor).
(6) The lubricity of a fuel is a concern with low sulfur and ultra low sulfur fuel. To determine the lubricity of the fuel, use the “ISO 12156-1 or ASTM D6079 High Frequency Reciprocating Rig (HFRR)” test. If the lubricity of a fuel does not meet the minimum requirements, consult your fuel supplier. Do not treat the fuel without consulting the fuel supplier. Some additives are not compatible. These additives can cause problems in the fuel system.
(7) Recommended cleanliness level for fuel as dispensed into machine or engine fuel tank is "ISO 18/16/13 or cleaner as per ISO 4406. Refer to the "Contamination Control Recommendations for Fuels" in this chapter.
(8) Additional limit for fuel containing FAME. Fuel containing more than 2%v/v FAME must meet both tests.

NOTICE

Operating with fuels that do not meet the Perkins recommendations can cause the following effects: Starting difficulty, poor combustion, deposits in the fuel injectors, reduced service life of the fuel system, deposits in the combustion chamber and reduced service life of the engine.

Engines that are manufactured by Perkins are certified with the fuel that is prescribed by the United States Environmental Protection Agency. Engines that are manufactured by Perkins are certified with the fuel that is prescribed by the European Certification and other regulatory agencies. Perkins does not certify diesel engines on any other fuel.

Note: The owner and the operator of the engine has the responsibility of using the fuel that is prescribed by the Environmental Protection Agency (EPA) and other appropriate regulatory agencies.

Diesel Fuel Characteristics

Perkins Recommendations

Cetane Number

Fuel that has a high cetane number will give a shorter ignition delay. A high cetane number will produce a better ignition quality. Cetane numbers are derived for fuels against proportions of cetane and heptamethylnonane in the standard CFR engine. Refer to “ISO 5165” for the test method.

Cetane numbers more than 45 are normally expected from current diesel fuel. However, a cetane number of 40 may be experienced in some territories. The United States of America is one of the territories that can have a low cetane value. A minimum cetane value of 40 is required during average starting conditions. A higher cetane value may be required for operations at high altitudes or in cold-weather operations.

Fuel with a low cetane number can be the root cause of problems during cold start.

Viscosity

Viscosity is the property of a liquid of offering resistance to shear or flow. Viscosity decreases with increasing temperature. This decrease in viscosity follows a logarithmic relationship for normal fossil fuel. The common reference is to kinematic viscosity. Kinematic viscosity is the quotient of the dynamic viscosity that is divided by the density. The determination of kinematic viscosity is normally by readings from gravity flow viscometers at standard temperatures. Refer to “ISO 3104” for the test method.

The viscosity of the fuel is significant because fuel serves as a lubricant for the fuel system components. Fuel must have sufficient viscosity to lubricate the fuel system in both cold temperatures and hot temperatures. If the kinematic viscosity of the fuel is lower than 1.4 cSt at the fuel injection pump, damage to the fuel injection pump can occur. This damage can be excessive scuffing and seizure. Low viscosity may lead to difficult hot restarting, stalling, and loss of performance. High viscosity may result in seizure of the pump.

Perkins recommends kinematic viscosities of 1.4 and 4.5 cSt that is delivered to the fuel injection pump. If a fuel with a low viscosity is used, cooling of the fuel may be required to maintain 1.4 cSt or greater viscosity at the fuel injection pump. Fuels with a high viscosity might require fuel heaters to lower the viscosity to 4.5 cSt at the fuel injection pump.

Density

Density is the mass of the fuel per unit volume at a specific temperature. This parameter has a direct influence on engine performance and a direct influence on emissions. This influence determines the heat output from a given injected volume of fuel. This parameter is quoted in the following kg/m3 at 15 °C (59 °F).

Perkins recommends a value of density of 841 kg/m3 to obtain the correct power output. Lighter fuels are acceptable but these fuels will not produce the rated power.

Sulfur

The level of sulfur is governed by emissions legislations. Regional regulation, national regulations, or international regulations can require a fuel with a specific sulfur limit. The sulfur content of the fuel and the fuel quality must comply with all existing local regulations for emissions.

LSD fuel with less than 0.05 percent (≤ 500 ppm (mg/kg)) sulfur is recommended for use in these engine models.

ULSD less than 0.0015% (≤15 PPM (mg/Kg)) sulphur is acceptable to use in these engine models. The lubricity of these fuels must not exceed wear scar diameter of 0.52 mm (0.02047 inch) as per “ISO 12156-1”. Refer to “Lubricity” for more information.

Fuels with sulphur content higher than 0.05 percent (500 PPM) can be used where allowed by legislation.

Fuel with a high sulfur content can cause engine wear. High sulfur fuel will have a negative impact on emissions of particulates. High sulfur fuel can be used if the local emissions legislation will allow the use. High sulfur fuel can be used in countries that do not regulate emissions.

When only high sulfur fuels are available, high alkaline lubricating oil must be used in the engine. Alternatively, the lubricating oil change interval must be reduced. Refer to Operation and Maintenance Manual, “Fluid Recommendations (Lubricant Information)” for information on sulfur in fuel.

Lubricity

Lubricity is the capability of the fuel to prevent pump wear. The lubricity of the fluid describes the ability of the fluid to reduce the friction between surfaces that are under load. This ability reduces the damage that is caused by friction. Fuel injection systems rely on the lubricating properties of the fuel. Until fuel sulfur limits were mandated, the lubricity of the fuel was believed to be a function of fuel viscosity.

The lubricity has particular significance to the current low viscosity fuel, low sulfur fuel, and low aromatic fossil fuel. These fuels are made to meet stringent exhaust emissions.

The lubricity of these fuels must not exceed wear scar diameter of 0.52 mm (0.02047 inch). The fuel lubricity test must be performed on an HFRR, operated at 60 °C (140 °F). Refer to “ISO 12156-1”.

NOTICE

The fuels system has been qualified with fuel having lubricity up to 0.52 mm (0.02047 inch) wear scar diameter as tested by “ISO 12156-1”. Fuel with higher wear scar diameter than 0.52 mm (0.02047 inch) will lead to reduced service life and premature failure of the fuel system.

In the fuels which do not meet specified lubricity requirement appropriate lubricity additive can be used to enhance the lubricity of the fuel.

Perkins Diesel Fuel Conditioner U5MK8276 is the approved additive refer to section, Perkins Diesel Fuel Conditioner for more information.

Contact your fuel supplier for those circumstances when fuel additives are required. Your fuel supplier can make recommendations for additives to use and for the proper level of treatment.

Distillation

Distillation will give an indication of the mixture of different hydrocarbons in the fuel. A high ratio of lightweight hydrocarbons can affect the characteristics of combustion.

Classification of the Fuels

Diesel engines have an ability to burn wide variety of fuels. Below is a list of typically encountered fuel specifications that have been assessed as to their acceptability and are divided into following categories:

Group 1: Preferred Fuels

The following fuel specifications are considered acceptable.

- Fuels that meet the requirements that are listed in the table 3 .
- “IS 1460 Bharat Stage 2, 3 and 4”
- “EN590 - Grades A to F and class 0 to 4”
- “ASTM D975 Grade No. 1-D and 2-D”
- “JIS K2204 Grades 1, 2 & 3 & Special Grade 3” acceptable provided lubricity ware scar diameter does not exceed of 0.52 mm (0.02047 inch) as per “ISO 12156-1” .
- “BS2869 - Class A2 Off Highway Gas Oil, Red Diesel”

Note: The lubricity of these fuels must not exceed wear scar diameter of 0.52 mm (0.02047 inch) as per “ISO 12156-1” . Refer to “Lubricity”.

Group 2: Aviation Kerosene Fuels

Following kerosene and jet fuel specifications are acceptable alternative fuels, and may be used on a contingency base for emergency or continuous use, where standard diesel fuel is not available and where legislation allows their use:

- “MIL-DTL-83133 NATO F34 (JP-8)”
- “MIL-DTL-83133 NATO F35”
- “MIL-DTL-5624 NATO F44 (JP-5)”
- “MIL-DTL-38219 (USAF) (JP7)”
- “NATO XF63”
- “ASTM D1655 JET A”
- “ASTM D1655 JET A1”

NOTICE
These fuels are only acceptable when used with appropriate lubricity additive and must meet minimum requirements that are listed in table 3 . The lubricity of these fuels must not exceed wear scar diameter of 0.52 mm (0.02047 inch) as per “ISO 12156-1” . Refer to “Lubricity” and Perkins Diesel Fuel Conditioner.

Note: Minimum cetane number of 40 is recommended otherwise cold starting problems or light load misfire might occur. Since jet fuel specifications do not mention cetane requirements, Perkins recommends that a fuel sample is taken to determine the cetane number.

Note: Fuels must have minimum viscosity of 1.4 cSt delivered to the fuel injection pump. Cooling of the fuel may be required to maintain 1.4 cSt or greater viscosity at the fuel injection pump. Perkins recommends that the actual viscosity of the fuel, be measured to determine if a fuel cooler is needed. Refer to “Viscosity”.

Note: Rated power loss of up to 10 percent is possible due to lower density and lower viscosity of jet fuels compared to diesel fuels.

Biodiesel Fuel

Biodiesel is a fuel that can be defined as mono-alkyl esters of fatty acids. Biodiesel is a fuel that can be made from various feedstock. The most commonly available biodiesel in Europe is Rape Methyl Ester (REM). This biodiesel is derived from rapeseed oil. Soy Methyl Ester (SME) is the most common biodiesel in the United States. This biodiesel is derived from soybean oil. Soybean oil or rapeseed oil are the primary feedstocks. These fuels are together known as Fatty Acid Methyl Esters (FAME).

Raw pressed vegetable oils are NOT acceptable for use as a fuel in any concentration in compression engines. Without esterification, these oils may gel in the crankcase and the fuel tank. These fuels may not be compatible with many of the elastomers that are used in engines that are manufactured today. In original forms, these oils are not suitable for use as a fuel in compression engines. Alternate base stocks for biodiesel may include animal tallow, waste cooking oils, or various other feedstocks. To use any of the products that are listed as fuel, the oil must be esterified.

Fuel made of 100 percent FAME is normally referred to as B100 biodiesel or neat biodiesel.

Biodiesel can be blended with distillate diesel fuel. The blends can be used as fuel. The most commonly available biodiesel blends are B5, which is 5 percent biodiesel and 95 percent distillate diesel fuel. B20, which is 20 percent biodiesel and 80 percent distillate diesel fuel.

Note: The percentages given are volume-based. The U.S. distillate diesel fuel specification “ASTM D975-09a” includes up to B5 (5 percent) biodiesel.

European distillate diesel fuel specification “EN590:2010” includes up B7 (7 percent) biodiesel.

Note: Engines that are manufactured by Perkins are certified by use of the prescribed Environmental Protection Agency (EPA) and European Certification fuels. Perkins does not certify engines on any other fuel. The user of the engine has the responsibility of using the correct fuel that is recommended by the manufacturer and allowed by the EPA and other appropriate regulatory agencies.

Specification Requirements

The neat biodiesel must conform to “EN14214” or “ASTM D6751” (in the USA) and can only be blended in mixture of up to 20 percent, by volume in acceptable mineral diesel fuel meeting requirements that are listed in table 3 or the latest edition of “EN590” and “ASTM D 975” commercial standards. This blend is commonly known as B20.

Biodiesel blends are denoted as “BXX” with “XX” representing the content of neat biodiesel contained in the blend with mineral diesel fuel (for example B5, B10, B20).

In United States Biodiesel blends of B6 to B20 must meet the requirements listed in the latest edition of “ASTM D7467” (B6 to B20) and must be of an API gravity of 30-45.

In North America biodiesel and biodiesel blends must be purchased from the BQ-9000 accredited producers and BQ-9000 certified distributors.

In other areas of the world, the use of biodiesel that is BQ-9000 accredited and certified, or that is accredited and certified by a comparable biodiesel quality body to meet similar biodiesel quality standards is required.

Engine Service Requirements with B20

Aggressive properties of biodiesel fuel may cause debris in the fuel tank and fuel lines. The aggressive properties of biodiesel will clean the fuel tank and fuel lines. This cleaning of the fuel system can prematurely block of the fuel filters. Perkins recommends that after the initial usage of B20 biodiesel blended fuel the fuel filters must be replaced at 50 hours.

Glycerides present in biodiesel fuel will also cause fuel filters to become blocked more quickly. Therefore the regular service interval should be reduced to 250 hours.

When biodiesel fuel is used, crank case oil may be influenced. This influence is due to the chemical composition and characteristics of biodiesel fuel, such as density and volatility, and to chemical contaminants that can be present in this fuel, such as alkali and alkaline metals (sodium, potassium, calcium, and magnesium).

- Crankcase oil fuel dilution can be higher when biodiesel or biodiesel blends are used. This increased level of fuel dilution when using biodiesel or biodiesel blends is related to the typically lower volatility of biodiesel. In cylinder emissions control strategies utilized in many of the industrial latest engine designs may lead to a higher level of biodiesel concentration in the engine oil pan. The long-term effect of biodiesel concentration in crankcase oil is unknown.
- Perkins recommends the use of oil analysis to check the quality of the engine oil if biodiesel fuel is used. Ensure that the level of biodiesel in the fuel is noted when the oil sample is taken.

Performance Related Issues with B20

Due to the lower energy content than the standard distillate fuel B20 will cause a power loss in order of 2 to 4 percent. In addition, over time the power may deteriorate further due to deposits in the fuel injectors.

Biodiesel and biodiesel blends are known to cause an increase in fuel system deposits, most significant of which are deposits within the fuel injector.

Perkins Diesel Fuel Cleaner T400012 is most effective in cleaning and preventing the formation of deposits. Refer to section, Perkins Diesel Fuel System Cleaner for more information. Perkins Diesel Fuel Conditioner U5MK8276 helps to limit deposit issues by improving the stability of biodiesel while also hindering the production of new deposits. For more information refer to section, Perkins Diesel Fuel Conditioner. Therefore the use of Perkins Diesel Fuel Cleaner and or Perkins Diesel Fuel Conditioner is recommended when running biodiesel blends, especially B20.

Perkins T400012 Fuel Cleaner is most effective in cleaning and preventing the formation of deposits. Refer to “Perkins Diesel Fuel System Cleaner, and Perkins” for more information. Perkins U5MK8276 Perkins Diesel Fuel Conditioner helps to limit deposit issues by improving the stability of biodiesel while also hindering the production of new deposits. For more information refer to “Perkins Diesel Fuel Conditioner, and Perkins”. Therefore the use of Diesel Fuel Cleaner and or Diesel Fuel Conditioner is recommended when running biodiesel blends, especially B20.

General Requirements

Biodiesel has poor oxidation stability, which can result in long-term problems in the storage of biodiesel. Biodiesel fuel should be used within 6 months of manufacture. Equipment should not be stored with the B20 biodiesel blends in the fuel system for longer than 3 months.

Due to poor oxidation stability and other potential issues, Perkins recommends that engines with limited operational time either do not use biodiesel blends or, while accepting some risk, limit biodiesel blend to a maximum of B5. Examples of applications that should limit the use of biodiesel are the following: Standby generator sets and certain emergency vehicles.

For standby generator sets and emergency vehicles that cannot avoid use of biodiesel blends fuel quality in the engine fuel tank must be sampled and checked monthly. Test should include acid number (EN14104), oxidation stability (EN 15751 commonly know as the Rancimant test), and sediment (ISO12937). For standby generator sets oxidation stability of biodiesel blend must be 20 hours or more as per EN 15751. If the test shows that the fuel has degraded, fuel tank must be drained and engine flashed by running with the fresh high-quality diesel fuel.

For standby generator sets and emergency vehicles that cannot avoid use of biodiesel blends fuel quality in the engine fuel tank must be sampled and checked monthly. Test should include acid number (EN14104), oxidation stability (EN 15751 commonly know as the Rancimant test), and sediment (ISO12937). For standby generator sets oxidation stability of biodiesel blend must be 20 hours or more as per EN 15751. If the test shows that the fuel has degraded, fuel tank must be drained and engine flashed by running with fresh high-quality diesel fuel.

Perkins strongly recommends that seasonally operated engines have the fuel systems, including fuel tanks, flashed with conventional diesel fuel before prolonged shutdown periods. An example of an application that should seasonally flush the fuel system is a combine harvester.

Microbial contamination and growth can cause corrosion in the fuel system and premature plugging of the fuel filter. Consult your supplier of fuel for assistance in selecting appropriate antimicrobial additive.

Water accelerates microbial contamination and growth. When biodiesel is compared to distillate fuels, water is naturally more likely to exist in the biodiesel. Frequent checks are therefore essential and if necessary, drain the water separator.

Materials such as brass, bronze, copper, led, tin, and zinc accelerate the oxidation process of the biodiesel fuel. The oxidation process can cause deposits formation therefore these materials must not be used for fuel tanks and fuel lines.

Fuel for Cold-Weather Operation

The European standard “EN590” contains climate dependant requirements and a range of options. The options can be applied differently in each country. There are five classes that are given to arctic climates and severe winter climates. 0, 1, 2, 3 and 4.

Fuel that complies with “EN590” CLASS 4 can be used at temperatures as low as −44 °C (−47.2 °F). Refer to “EN590” fora detailed discretion of the physical properties of the fuel.

The diesel fuel “ASTM D975 1-D” used in the United States of America may be used in cold temperatures that are below −18 °C (−0.4 °F).

In extreme cold ambient conditions, you may use the aviation kerosene fuels that are specified in Group 2. These fuels are intended to be used in temperatures that can be as low as −54 °C (−65.2 °F). Refer to Group 2 for detail and conditions of use of the aviation kerosene fuels.

⚠ WARNING

Mixing alcohol or gasoline with diesel fuel can produce an explosive mixture in the engine crankcase or the fuel tank. Alcohol or gasoline must not be used in order to dilute diesel fuel. Failure to follow this instruction may result in death or personal injury.

There are many other diesel fuel specifications that are published by governments and by technological societies. Usually, those specifications do not review all the requirements that are addressed in table 3 . To ensure optimum engine performance, a complete fuel analysis should be obtained before engine operation. The fuel analysis should include all the properties that are stated in the table 3 .

Aftermarket Fuel Additives

NOTICE

Perkins does not warrant the quality or performance of non-Perkins fluids and filters.

When auxiliary devices, accessories, or consumables (filters, additives) which are made by other manufacturers are used on Perkins products, the Perkins warranty is not affected simply because of such use.

However, failures that result from the installation or use of other manufacturers devices, accessories, or consumables are NOT Perkins defects. Therefore, the defects are NOT covered under the Perkins warranty.

Supplemental diesel fuel additives are not generally recommended, This recommendation is due to potential damage to the fuel system or the engine.

Perkins recognizes the fact that additives may be required in some special circumstances. Fuel additives must be used with caution. Contact your fuel supplier for those circumstances when fuel additives are required. Your fuel supplier can recommend the appropriate fuel additive and the correct level of treatment.

Note: For the best results, your fuel supplier should treat the fuel when additives are required. The treated fuel must meet the requirements that are stated in table 3 .

Perkins Diesel Fuel System Cleaner

Perkins T400012 Fuel Cleaner is the only fuel cleaner that is recommended by Perkins.

Perkins Diesel Fuel Cleaner (part number T400012) is the only fuel cleaner that is recommended by Perkins.

If biodiesel or biodiesel blends of fuel are to be used, Perkins require the use of Perkins fuel cleaner. For more information on the use of biodiesel and biodiesel blends refer to “Biodiesel Fuel”.

Perkins fuel cleaner will remove deposits that can form in the fuel system with the use of biodiesel and biodiesel blends. These deposits can create a loss of power and engine performance.

Once the fuel cleaner has been added to the fuel, the deposits within the fuel system are removed after 30 hours of engine operation. For maximum results, continue to use the fuel cleaner for up to 80 hours. Perkins fuel cleaner can be used on an on-going basis with no adverse impact on engine or fuel system durability.

Detailed instructions on the rate of which the fuel cleaner must be use are on the container.

Perkins Diesel Fuel Conditioner

Perkins Diesel Fuel Conditioner (part number U5MK8276) can be used in these engine models. The diesel fuel conditioner is a proprietary metal and ash free formulation that has been extensively tested for use with distillate diesel fuels for use in Perkins diesel engines. The diesel fuel conditioner helps address many of the challenges that various fuels worldwide present with regard to fuel life/stability, engine startability, injector deposits, fuel system life, and long-term engine performance. Contact a Perkins distributor for more information.

Note: Diesel fuel additives/conditioners may not improve markedly poor diesel fuel properties enough to make poor diesel acceptable for use.

Diesel fuel conditioner is a proven high performance, multipurpose diesel fuel conditioner that is designed to improve:

- Fuel economy (through fuel system clean-up)
- Lubricity
- Oxidation stability
- Detergency/dispersancy
- Moisture dispersancy
- Corrosion protection
- Cetane (typically 2-3 cetane numbers)

The diesel fuel conditioner also reduces the formation of gums, resins, and sludge, and disperses insoluble gums.

For maximum overall benefits, ask your fuel supplier to add the fuel conditioner at the recommended treat rate before fuel delivery. Or you may add the fuel conditioner at the recommended treat rate during the early weeks of fuel storage.

Contamination Control Recommendations for Fuels

Fuels of “ISO 18/16/13” cleanliness level or cleaner as dispensed into the engine or application fuel tank should be used. This will reduce risk of power loss, fuel system failures, and related down time of engines. This cleanliness level is important for new fuel system designs such as common rail injection systems and unit injectors. These fuels systems utilize higher fuel injection pressures and have tight clearances between moving parts to meet required stringent emissions regulations. Peak injection pressures in current fuel injection systems may exceed 2000 bar (29000 psi). Clearances in these systems are less than 5 µm. As a result, particle contaminants as small as 4 µm can cause scoring and scratching of internal pump and injector surfaces and of injector nozzles.

Water in the fuel causes cavitation, corrosion of fuel system parts, and provides an environment where microbial growth in the fuel can flourish. Other sources of fuel contamination are soaps, gels, or other compounds that may result from undesirable chemical interactions in the fuels, particularly in ULSD. Gels and other compounds can also form in biodiesel fuel at low temperatures or if biodiesel is stored for extended periods. The best indication of microbial contamination, fuel additives, or cold temperature gel is rapid filter plugging of bulk fuel filters or application fuel filters.

To reduce downtime due to contamination, follow these fuel maintenance guidelines.

- Use high-quality fuels per recommended and required specifications

- Fill fuel tanks with fuels of “ISO 18/16/13” cleanliness level or cleaner, in particular for engines with common rail and unit injection systems. When you refuel the tank, filter the fuel through a 4 µm absolute filter (Beta 4 = 75 up to 200) in order to reach the recommended cleanliness level. This filtration should be located at the device that dispenses the fuel to the fuel tank. In addition, filtration at the dispensing point should remove water to ensure that fuel is dispensed at 500 ppm water or less.
- Perkins recommends the use of bulk fuel filter / coalescer units which clean the fuel of both particulate contamination and water in a single pass.
- Ensure that you use Perkins Advanced Efficiency Fuel Filters. Change your fuel filters per recommended service requirements or as needed.
- Drain your water separators daily.
- Drain your fuel tanks of sediment and water per the Operation and Maintenance Manual instructions.
- Install and maintain a properly designed bulk filter / coalescer filtration system. Continuous bulk filtration systems may be required to ensure that dispensed fuel meets the cleanliness target. Consult your Perkins distributor for availability of bulk filtration products.
- Centrifugal filters may need to be used as a pre-filter with fuel that is severely contaminated with gross amounts of water and/or large particulate contaminants. Centrifugal filters can effectively remove large contaminants. Centrifugal filters may not be able to remove the small abrasive particles required to achieve the recommended “ISO” cleanliness level. Bulk filter / coalescers are necessary as a final filter to achieve the recommended cleanliness level.
- Install desiccant type breathers of 4 µm or less absolute efficiency with the ability to remove water on bulk storage tanks.
- Follow proper practices of fuel transportation. Filtration from the storage tank to the application promotes the delivery of clean fuel. Fuel filtration can be installed at each transport stage to keep the fuel clean.
- Cover, protect, and ensure cleanliness of all connection hoses, fittings, and dispensing nozzles.

Consult your local Perkins distributor for additional information on Perkins designed and produced filtration products.

Renewable and Alternative Fuels

Perkins supports development and use of renewable fuels through sustainability initiatives. In recent years various forms of renewable and alternative (synthetic) diesel fuels have started to emerge.

Synthetic diesel fuels are produced by gasification of various feedstock and then synthesis to liquid to obtain paraffinic diesel fuel. Based on the feedstock used these fuels are commonly referred to as Biomass to liquid (BTL), Gas to liquid (GTL) and Coal to liquid (CTL). Hydrotreating of vegetable oils and animal fats is another emerging process for production of bio based diesel fuel called Hydrotreated Vegetable Oil (HVO).

BTL and HVO fuels are considered to be low carbon fuels as they reduce carbon foot print compared to fossil fuels and are commonly referred to as renewable fuels. These fuels must not be confused with biodiesel FAME which is fundamentally different fuel and is discussed in a separate section in this manual.

These paraffinic fuels have virtually no sulphur or aromatics and have very high cetane numbers which enable very clean burning and efficient engine operation. Chemically these fuels are similar to diesel fuel derived from petroleum and are therefore suitable to use in diesel engines as a replacement or blend stock with conventional diesel fuel. To be acceptable renewable and alternative fuels must meet latest edition of the paraffinic diesel fuel specification “CENTS 15940”. The fuel should also meet requirements described in table 3 , Perkins Specification for Distillate Diesel Fuel, EN590, or latest ASTM D975 specification.

Ensure that the fuel has got appropriate cold flow properties (cloud point and CFPP) for the minimum statistical ambient temperature the engine is expected to see in the operation. The Fuel must also meet lubricity requirements as specified in the lubricity section of the “Operation and Maintenance Manual” Fluid Recommendations

i07536297

Fluid Recommendations
(Engine Oil Specification)

General Lubricant Information

Because of government regulations regarding the certification of exhaust emissions from the engine, the lubricant recommendations must be followed.

- API American Petroleum Institute
- SAE Society Of Automotive Engineers Inc.
- ECF Engine Crankcase Fluid

Licensing

The Engine Oil Licensing and Certification System by the American Petroleum Institute (API) is recognized by Perkins. For detailed information about this system, see the latest edition of the “API publication No. 1509”. Engine oils that bear the API symbol are authorized by API.

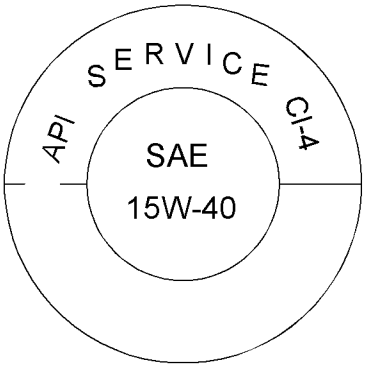

Illustration 29 g03360267
Typical API symbol

Terminology

Certain abbreviations follow the nomenclature of “SAE J754”. Some classifications follow “SAE J183” abbreviations, and some classifications follow the “EMA Recommended Guideline on Diesel Engine Oil”. In addition to Perkins definitions, there are other definitions that will be of assistance in purchasing lubricants. Recommended oil viscosities can be found in this publication, “Fluid Recommendations/ Engine Oil Specification” topic (Maintenance Section).

Engine Oil

Perkins Diesel Engine Oil

Perkins DEO CI-4 multi-grade oil has been developed and tested to provide full performance and service life that has been designed and built into Perkins Engines. Consult your Perkins distributors for more information.

Commercial Oils

NOTICE
Perkins require the use of the following specification of engine oil. Failure to use the appropriate specification of engine oil will reduce the life of your engine.

Table 4

Oil Specification for 1706A and the 1706D Industrial Engines	
Minimum Oil Specification	API CI-4 ECF-2
Preferred Oil Specification	CK-4

Lubricant Viscosity Recommendations for Direct Injection (DI) Diesel Engines

The correct SAE viscosity grade of oil is determined by the minimum ambient temperature during cold engine start-up, and the maximum ambient temperature during engine operation.

Refer to illustration 30 (minimum temperature) to determine the required oil viscosity for starting a cold engine.

Refer to illustration 30 (maximum temperature) to select the oil viscosity for engine operation at the highest ambient temperature that is anticipated.

Generally, use the highest oil viscosity that is available to meet the requirement for the temperature at start-up.

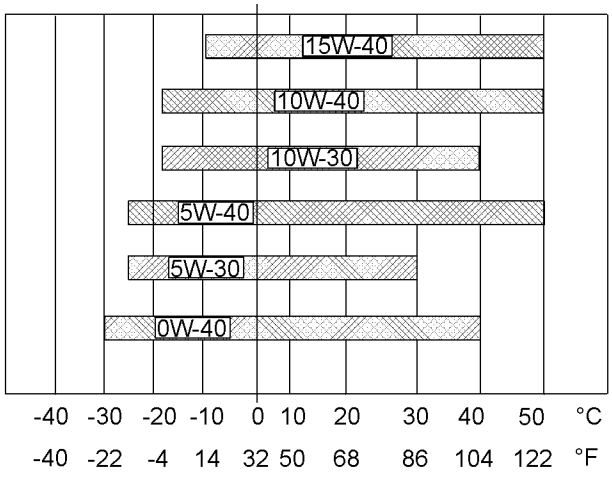

Illustration 30 g03347115

Lubricant Viscosities

Supplemental heat is recommended for cold soaked starts below the minimum ambient temperature. Supplemental heat may be required for cold soaked starts that are above the minimum temperature that is stated, depending on the parasitic load and other factors. Cold soaked starts occur when the engine has not been operated for a period of time. This interval will allow the oil to become more viscous due to cooler ambient temperatures.

Aftermarket Oil Additives

Perkins does not recommend the use of aftermarket additives in oil. It is not necessary to use aftermarket additives to achieve the engines maximum service life or rated performance. Fully formulated, finished oils consist of base oils and of commercial additive packages. These additive packages are blended into the base oils at precise percentages to help provide finished oils with performance characteristics that meet industry standards.

There are no industry standard tests that evaluate the performance or the compatibility of aftermarket additives in finished oil. Aftermarket additives may not be compatible with the finished oils additive package, which could lower the performance of the finished oil. The aftermarket additive could fail to mix with the finished oil. This failure could produce sludge in the crankcase. Perkins discourages the use of aftermarket additives in finished oils.

To achieve the best performance from a Perkins engine, conform to the following guidelines:

- See the appropriate “Lubricant Viscosities”. Refer to the illustration 30 to find the correct oil viscosity grade for your engine.
- At the specified interval, service the engine. Use new oil and install a new oil filter.
- Perform maintenance at the intervals that are specified in the Operation and Maintenance Manual, “Maintenance Interval Schedule or Fluid Recommendations Fuel Specification”.

Oil analysis

Some engines may be equipped with an oil sampling valve. If oil analysis is required, the oil sampling valve is used to obtain samples of the engine oil. The oil analysis will complement the preventive maintenance program.

The oil analysis is a diagnostic tool that is used to determine oil performance and component wear rates. Contamination can be identified and measured by using oil analysis. The oil analysis includes the following tests:

- The Wear Rate Analysis monitors the wear of the engines metals. The amount of wear metal and type of wear metal that is in the oil is analyzed. The increase in the rate of engine wear metal in the oil is as important as the quantity of engine wear metal in the oil.
- Tests are conducted to detect contamination of the oil by water, glycol, or fuel.

- The Oil Condition Analysis determines the loss of the oils lubricating properties. An infrared analysis is used to compare the properties of new oil to the properties of the used oil sample. This analysis allows technicians to determine the amount of deterioration of the oil during use. This analysis also allows technicians to verify the performance of the oil according to the specification during the entire oil change interval.

i10132192

Fluid Recommendations

General Coolant Information

NOTICE
Never add coolant to an overheated engine. Engine damage could result. Allow the engine to cool first.

NOTICE
If the engine is to be stored in, or shipped to an area with below freezing temperatures, the cooling system must be either protected to the lowest outside temperature or drained completely to prevent damage.

NOTICE
Frequently check the specific gravity of the coolant for proper freeze protection or for anti-boil protection.

Clean the cooling system for the following reasons:

- Contamination of the cooling system
- Overheating of the engine
- Foaming of the coolant

NOTICE
Never operate an engine without water temperature regulators in the cooling system. Water temperature regulators help to maintain the engine coolant at the proper operating temperature. Cooling system problems can develop without water temperature regulators.

Many engine failures are related to the cooling system. The following problems are related to cooling system failures: Overheating, leakage of the water pump and plugged radiators or heat exchangers.

These failures can be avoided with correct cooling system maintenance. Cooling system maintenance is as important as maintenance of the fuel system and the lubrication system. Quality of the coolant is as important as the quality of the fuel and the lubricating oil.

Coolant is normally composed of three elements: Water, additives, and glycol.

Refer to Perkins Diesel Engines Fluids Recommendations, M0113102 for additional information that relates to coolant.

Water

Water is used in the cooling system to transfer heat.

Note: The water must be used with an inhibitor to protect the engine.

Distilled water or deionized water is recommended for use in engine cooling systems.

DO NOT use the following types of water in cooling systems: Hard water, softened water that has been conditioned with salt and sea water.

If distilled water or deionized water is not available, use water with the properties that are listed in Table 5 .

Table 5

Acceptable Water	
Property	**Maximum Limit**
Chloride (Cl)	40 mg/L
Sulfate (SO_4)	100 mg/L
Total Hardness	170 mg/L
Total Solids	340 mg/L
Acidity	pH of 5.5 to 9.0

For a water analysis, consult one of the following sources:

- Local water utility company
- Agricultural agent
- Independent laboratory

Additives

Additives help to protect the metal surfaces of the cooling system. A lack of coolant additives or insufficient amounts of additives enable the following conditions to occur:

- Corrosion
- Formation of mineral deposits
- Rust
- Scale
- Foaming of the coolant

Many additives are depleted during engine operation. These additives must be replaced periodically.

Additives must be added at the correct concentration. Over concentration of additives can cause the inhibitors to drop out-of-solution. The deposits can enable the following problems to occur:

- Formation of gel compounds
- Reduction of heat transfer
- Leakage of the water pump seal
- Plugging of radiators, coolers, and small passages

Glycol

Glycol in the coolant helps to provide protection against the following conditions:

- Boiling
- Freezing
- Cavitation of the water pump

For optimum performance, Perkins recommends a 1:1 mixture of a water/glycol solution.

Note: Use a mixture that will provide protection against the lowest ambient temperature.

Note: 100 percent pure glycol will freeze at a temperature of −13 °C (8.6 °F).

Most conventional antifreezes use ethylene glycol. Propylene glycol may also be used. In a 1:1 mixture with water, ethylene and propylene glycol provide similar protection against freezing and boiling. Refer to Table 6 and refer to table 7 .

Table 6

Ethylene Glycol	
Concentration	**Freeze Protection**
50 Percent	−36 °C (−33 °F)
60 Percent	−51 °C (−60 °F)

NOTICE

Do not use propylene glycol in concentrations that exceed 50 percent glycol because of the reduced heat transfer capability of propylene glycol. Use ethylene glycol in conditions that require additional protection against boiling or freezing.

Table 7

Propylene Glycol	
Concentration	**Freeze Protection**
50 Percent	−29 °C (−20 °F)

To check the concentration of glycol in the coolant, measure the specific gravity of the coolant.

Note: Some commercially available coolants are based on alternative fluids, such as 1, 3-propanediol (beta-propylene glycol, PDO), glycerin (glycerol), or mixtures of these alternatives with ethylene/propylene glycols. At the time of publication of this document no industry standard exists for coolants based on these chemicals. Until such standard/specifications are published and evaluated by Perkins, use of PDO, glycerine, or other alternative coolants is not recommended in Perkins diesel engines.

Coolant Recommendations

- ELC_____Extended Life Coolant
- SCA_____Supplement Coolant Additive
- ASTM_____American Society for Testing and Materials

ELC - extended life coolant. A coolant that relies on organic inhibitors for corrosion and cavitation protection. Also called OAT coolant (Organic Acid Technology).

SCA - supplemental coolant additive, concentrated inorganic inhibitor package.

Extender - concentrated organic inhibitor package.

Conventional Coolant - a coolant that relies on inorganic inhibitors for corrosion and cavitation protection.

Hybrid Coolant - a coolant in which the corrosion and cavitation protection is based on a mixture of organic and inorganic inhibitors.

The following coolants are recommended for used in Perkins diesel engines:

Preferred – Perkins ELC

Acceptable – A commercial heavy-duty antifreeze that meets “ASTM D6210” or “ASTM D4985” specifications.

NOTICE

The Perkins industrial engines with a NOx reduction system must be operated with a minimum 30% volume glycol-water mixture, Perkins recommends 50% volume glycol-water mixture of water and glycol. The 50% concentration allows the NOx reduction system to operate correctly at high ambient temperatures.

NOTICE
Do not use a commercial coolant/antifreeze that only meets the ASTM D3306 specification. This type of coolant/antifreeze is made for light automotive applications.

Perkins recommends a 50% mixture of water and glycol. This mixture of water and glycol will provide optimum heavy-duty performance as an antifreeze. This ratio may be changed to 40% water to 60% glycol if extra freezing protection is required.

A mixture of SCA inhibitor and water is acceptable but will not give the same level of corrosion, boiling, and freezing protection as ELC. Perkins recommends a 6 percent to 8 percent concentration of SCA in those cooling systems. Distilled water or deionized water is preferred.

Table 8

Coolant Service Life	
Coolant Type	**Service Life** (1)
Perkins ELC	6,000 Service Hours or Three Years
Commercial Heavy-Duty Anti-freeze that meets “ASTM D6210”	3000 Service Hours or Two Year
Commercial SCA inhibitor and Water	3000 Service Hours or One Year

(1) Use the interval that occurs first. The cooling system must also be flushed out at this time.

Perkins ELC

Perkins provides ELC for use in the following applications:

- Heavy-duty spark ignited gas engines
- Heavy-duty diesel engines
- Automotive applications

The anti-corrosion package for ELC is different from the anti-corrosion package for other coolants. ELC is an ethylene glycol base coolant. However, ELC contains organic corrosion inhibitors and antifoam agents with low amounts of nitrite. Perkins ELC has been formulated with the correct amount of these additives to provide superior corrosion protection for all metals in engine cooling systems.

ELC is available in a premixed cooling solution with distilled water. ELC is a 1:1 mixture. The Premixed ELC provides freeze protection to −36 °C (−33 °F). The Premixed ELC is recommended for the initial fill of the cooling system. The Premixed ELC is also recommended for topping off the cooling system.

Containers of several sizes are available. Consult your Perkins distributor for the part numbers.

ELC Cooling System Maintenance

Correct additions to the Extended Life Coolant

NOTICE
Use only Perkins products for pre-mixed coolants.

Mixing Extended Life Coolant with other products reduces the Extended Life Coolant service life. Failure to follow the recommendations can reduce cooling system components life unless appropriate corrective action is performed.

To maintain the correct balance between the antifreeze and the additives, you must maintain the recommended concentration of ELC. Lowering the proportion of antifreeze lowers the proportion of additive. Lowering the ability of the coolant to protect the system will form pitting, from cavitation, from erosion, and from deposits.

NOTICE
Do not use a conventional coolant to top-off a cooling system that is filled with Extended Life Coolant (ELC).

Do not use supplemental coolant additive (SCA).

ELC Cooling System Cleaning

Note: If the cooling system is already using ELC, use cleaning agents is not required at the specified coolant change interval. Cleaning agents are only required if the system has been contaminated by the addition of some other type of coolant or by cooling system damage.

Clean water is the only cleaning agent that is required when ELC is drained from the cooling system.

Before the cooling system is filled, the heater control (if equipped) must be set to the HOT position. Refer to the OEM to set the heater control. After the cooling system is drained and the cooling system is refilled, operate the engine until the coolant level reaches the normal operating temperature and until the coolant level stabilizes. As needed, add the coolant mixture to fill the system to the specified level.

Changing to Perkins ELC

To change from heavy-duty antifreeze to the Perkins ELC, perform the following steps:

NOTICE
Care must be taken to ensure that all fluids are contained during performance of inspection, maintenance, testing, adjusting and the repair of the product. Be prepared to collect the fluid with suitable containers before opening any compartment or disassembling any component containing fluids.

Dispose of all fluids according to local regulations and mandates.

1. Drain the coolant into a suitable container.
2. Dispose of the coolant according to local regulations.
3. Fill the cooling system with a 33 percent solution of Perkins ELC and operate the engine, ensure that the thermostat opens. Stop the engine and allow the engine to cool. Drain the coolant.

Note: Use distilled or deionized water in the solution.

4. Again, fill the cooling system with a 33 percent solution of Perkins ELC and operate the engine ensure that the thermostat opens. Stop the engine and allow to cool.
5. Drain the cooling system.

NOTICE
Incorrect or incomplete flushing of the cooling system can result in damage to copper and other metal components.

NOTICE
Most commercial cooling system cleaning agents are corrosive and their use is not recommended by Perkins.

6. Fill the cooling system with the Perkins Premixed ELC. Operate the engine. Ensure that all coolant valves open then stop the engine. When cool check the coolant level.

ELC Cooling System Contamination

NOTICE
Mixing ELC with other products reduces the effectiveness of the ELC and shortens the ELC service life. Failure to follow these recommendations can result in shortened cooling system component life.

ELC cooling systems can withstand contamination to a maximum of 10 percent of conventional heavy-duty antifreeze or SCA. If the contamination exceeds 10 percent of the total system capacity, perform ONE of the following procedures:

- Drain the cooling system into a suitable container. Dispose of the coolant according to local regulations. Flush the system with a 5 to 10 percent solution of Perkins ELC. Fill the system with the Perkins ELC.
- Maintain the system as a conventional Heavy-Duty Coolant. Treat the system with an SCA. Change the coolant at the interval that is recommended for the conventional Heavy-Duty Coolant.

Commercial Heavy-Duty Antifreeze and SCA

NOTICE
Commercial Heavy-Duty Coolant which contains Amines as part of the corrosion protection system must not be used.

NOTICE
Never operate an engine without water temperature regulators in the cooling system. Water temperature regulators help to maintain the engine coolant at the correct operating temperature. Cooling system problems can develop without water temperature regulators.

Check the glycol concentration to ensure adequate protection against boiling or freezing. Perkins recommends the use of a refractometer for checking the glycol concentration. A hydrometer must not be used.

Perkins engine cooling systems should be tested at 500 hour intervals for the concentration of SCA.

Additions of SCA are based on the results of the test. An SCA that is liquid may be needed at 500 hour intervals.

NOTICE
Do not mix types and brands of coolant.

Do not mix brands and types of SCAs.

Do not mix SCAs and Extenders.

Only use SCAs or Extender approved by coolant manufacturer and compatible with coolant.

Adding the SCA to Heavy-Duty Coolant at the Initial Fill

Coolants conforming to ASTM D4985 and not conforming D6210 require the addition of SCA at initial fill.

Use the equation that is in Table 9 to determine the amount of SCA that is required when the cooling system is initially filled.

Table 9

Equation For Adding The SCA To The Heavy-Duty Coolant At The Initial Fill
V × 0.07 = X
V is the total volume of the cooling system.
X is the amount of SCA that is required.

Table 10 is an example for using the equation that is in Table 9 .

Table 10

Example Of The Equation For Adding The SCA To The Heavy-Duty Coolant At The Initial Fill		
Total Volume of the Cooling System (V)	**Multiplication Factor**	**Amount of SCA that is Required (X)**
15 L (4 US gal)	× 0.07	1.05 L (35.5 oz)

Adding The SCA to The Heavy-Duty Coolant For Maintenance

Heavy-duty antifreeze of all types REQUIRE periodic additions of an SCA.

Test the antifreeze periodically for the concentration of SCA. For the interval, refer to the Operation and Maintenance Manual, “Maintenance Interval Schedule” (Maintenance Section). Cooling System Supplemental Coolant Additive (SCA) Test/Add.

Additions of SCA are based on the results of the test. The size of the cooling system determines the amount of SCA that is needed.

Use the equation that is in Table 11 to determine the amount of SCA that is required, if necessary:

Table 11

Equation For Adding The SCA To The Heavy-Duty Coolant For Maintenance
V × 0.023 = X
V is the total volume of the cooling system.
X is the amount of SCA that is required.

Table 12 is an example for using the equation that is in Table 11 .

Table 12

Example Of The Equation For Adding The SCA To The Heavy-Duty Coolant For Maintenance		
Total Volume of the Cooling System (V)	**Multiplication Factor**	**Amount of SCA that is Required (X)**
15 L (4 US gal)	× 0.023	0.35 L (11.7 oz)

Cleaning the System of Heavy-Duty Antifreeze

Note: Before corrosion inhibitors can be effective the cooling system must be free from rust, scale and deposits.

- Drain the cooling system.
- Before filling the cooling system with acceptable quality water, pre-dissolve the cleaning agent in the water. Use a non-foaming detergent to clean oil contamination, consult your Perkins dealer for suitable product.

NOTICE

Most commercial cooling system cleaning agents are corrosive and their use is not recommended by Perkins.

The cooling system must be thoroughly flushed with clean water after using cleaning agents.

Cleaning agents for marine or industrial cooling system must not be used, these arevery aggressive and can cause damage to cooling system components.

- Run the engine for approximately 30 minutes and then leave the engine to cool down.
- Take a sample of the solution from the cooling system, drain the system.
- Allow the sample to sit for at least 30 minutes and check for signs of oil and deposits. If oil and deposits are still present repeat the procedure.
- Flush the system with clean water.
- Fill the system with new coolant.

Maintenance Recommendations

i08186078

System Pressure Release

Coolant System

WARNING

Pressurized system: Hot coolant can cause serious burn. To open cap, stop engine, wait until radiator is cool. Then loosen cap slowly to relieve the pressure.

To relieve the pressure from the coolant system, turn off the engine. Allow the cooling system pressure cap to cool. Remove the cooling system pressure cap slowly to relieve pressure.

Fuel System

To relieve the pressure from the fuel system, turn off the engine.

High-Pressure Fuel Lines (If Equipped)

WARNING

Contact with high pressure fuel may cause fluid penetration and burn hazards. High pressure fuel spray may cause a fire hazard. Failure to follow these inspection, maintenance and service instructions may cause personal injury or death.

The high-pressure fuel lines are between the high-pressure fuel pump and the high-pressure fuel manifold. The high-pressure fuel lines are also between the fuel manifold and cylinder head. These fuel lines are different from fuel lines on other fuel systems.

The following are the differences:

- The high-pressure fuel lines are constantly charged with high pressure.
- The internal pressures of the high-pressure fuel lines are higher than other types of fuel system.

Before any service or repair is performed on the engine fuel lines, perform the following tasks:

1. Stop the engine.

2. Wait for 10 minutes.

Do not loosen the high-pressure fuel lines to remove air pressure from the fuel system.

Engine Oil

To relieve pressure from the lubricating system, turn off the engine.

i05963859

Welding on Engines with Electronic Controls

NOTICE

Because the strength of the frame may decrease, some manufacturers do not recommend welding onto a chassis frame or rail. Consult the OEM of the equipment or your Perkins distributor regarding welding on a chassis frame or rail.

Proper welding procedures are necessary in order to avoid damage to the engines ECM, sensors, and associated components. When possible, remove the component from the unit and then weld the component. If removal of the component is not possible, the following procedure must be followed when you weld on a unit equipped with an Electronic Engine. The following procedure is considered to be the safest procedure to weld on a component. This procedure should provide a minimum risk of damage to electronic components.

NOTICE

Do not ground the welder to electrical components such as the ECM or sensors. Improper grounding can cause damage to the drive train bearings, hydraulic components, electrical components, and other components.

Clamp the ground cable from the welder to the component that will be welded. Place the clamp as close as possible to the weld. This will help reduce the possibility of damage.

Note: Perform the welding in areas that are free from explosive hazards.

1. Stop the engine. Turn the switched power to the OFF position.

2. Ensure that the fuel supply to the engine is turned off.

3. Disconnect the negative battery cable from the battery. If a battery disconnect switch is provided, open the switch.

4. Disconnect all electronic components from the wiring harnesses. Include the following components:

- Electronic components for the driven equipment
- ECM
- Sensors
- Electronically controlled valves
- Relays

NOTICE
Do not use electrical components (ECM or ECM sensors) or electronic component grounding points for grounding the welder.

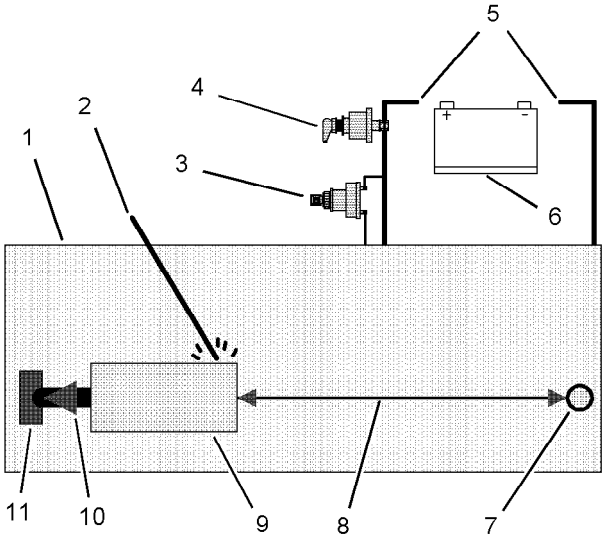

Illustration 31 g01075639

Use the example above. The current flow from the welder to the ground clamp of the welder will not damage any associated components.

(1) Engine
(2) Welding electrode
(3) Keyswitch in the OFF position
(4) Battery disconnect switch in the open position
(5) Disconnected battery cables
(6) Battery
(7) Electrical/Electronic component
(8) Minimum distance between the component that is being welded and any electrical/electronic component
(9) The component that is being welded
(10) Current path of the welder
(11) Ground clamp for the welder

5. Connect the welding ground cable directly to the part that will be welded. Place the ground cable as close as possible to the weld in order to reduce the possibility of welding current damage to the following components. Bearings, hydraulic components, electrical components, and ground straps.

Note: If electrical/electronic components are used as a ground for the welder, or electrical/electronic components are located between the welder ground and the weld, current flow from the welder could severely damage the component.

6. Protect the wiring harness from welding debris and spatter.

7. Use standard welding practices to weld the materials.

i10573251

Severe Service Application

Severe service is the application of an engine that either exceeds the current published standards for that engine range. Or results in the engine being used at the extremes of certain operating conditions.

- Performance such as power range, speed range, and fuel consumption
- Fuel quality
- Operational Altitude
- Maintenance intervals
- Oil selection and maintenance
- Coolant type and maintenance
- Environmental qualities
- Installation
- The temperature of the fluid in the engine

Refer to the standards for the engine or consult your Perkins distributor to determine if the engine is operating within the defined parameters.

Severe service operation can accelerate component wear. Engines that operate under severe conditions may need more frequent maintenance intervals to ensure maximum reliability and retention of full service life.

Due to individual applications, identification is not possible for all the factors which can contribute to severe service operation. Consult your Perkins distributor for the unique maintenance that is necessary for the engine.

The operating environment, incorrect operating procedures, and incorrect maintenance procedures can be factors which contribute to a severe service application.

Environmental Factors

Ambient temperatures – The engine may be exposed to extended operation in extremely cold environments or hot environments. Valve components can be damaged by carbon buildup if the engine is frequently started and stopped in very cold temperatures. Extremely hot intake air reduces engine performance.

Quality of the air – The engine may be subjected to extended operation in environments that are dirty, dusty, or contaminated. If the equipment is not cleaned regularly, mud, dirt, and dust can accumulate and encase components, leading to increased wear and maintenance challenges. The ingress of contaminants that affect combustion air quality and exhaust gas composition should be avoided. It is recommended to ensure adequate workplace ventilation and to follow local air quality guidelines and regulations.

Buildup – Compounds, elements, corrosive chemicals, and salt can damage some components.

Altitude – Problems can arise when the engine is operated at altitudes that are higher than the intended settings for that application. Necessary adjustments should be made.

Incorrect Operating Procedures

- Extended operation at low idle
- Frequent hot shutdowns
- Operating at excessive loads
- Operating at excessive speeds
- Operating outside the intended application

Incorrect Maintenance Procedures

- Extending the maintenance intervals
- Failure to use recommended fuel, lubricants, and coolant/antifreeze

i11087997

Maintenance Interval Schedule

When Required

“ Battery - Recycle“ 66
“ Battery - Replace“ 66
“ Battery or Battery Cable - Disconnect“. 67
“ Engine Air Cleaner Element - Replace“ 74
“ Engine - Clean“ 74
“ Fuel System - Prime“. 82
“ Fuel Tank Water and Sediment - Drain“ 85
“ Radiator - Clean“ 88

Daily

“ Air Tank Moisture and Sediment - Drain“ 65
“ Cooling System Coolant Level - Check“. 72
“ Driven Equipment - Check“. 74
“ Engine Air Cleaner Service Indicator - Inspect“. . 75
“ Engine Oil Level - Check“ 76
“ Fuel System Primary Filter/Water Separator - Drain“ 83
“ Power Take-Off Clutch - Check“ 88
“ Walk-Around Inspection“. 89

Every 250 Service Hours

“ Engine Oil Sample - Obtain“ 77
“ Grounding Stud - Inspect/Clean/Tighten“. 86

Initial 500 Service Hours

“ Engine Valve Lash - Check“ 81

Every 500 Service Hours

“ Air Shutoff - Test“. 65
“ Battery Electrolyte Level - Check“ 66
“ Belts - Inspect/Adjust/Replace“. 67
“ Belts - Inspect/Adjust/Replace“. 68
“ Cooling System Supplemental Coolant Additive (SCA) - Test/Add“. 72
“ Engine Oil and Filter - Change“. 78
“ Fuel System Primary Filter (Water Separator) Element - Replace“ 82
“ Fuel System Secondary Filter - Replace“. 84
“ Hoses and Clamps - Inspect/Replace“. 86

Every 2000 Service Hours

“ Fumes Disposal Filter Element - Replace“. 85

Every 2500 Service Hours

“ Engine Valve Lash - Check“ 81

Every 3000 Service Hours or 3 Years

“ Cooling System Coolant (DEAC) - Change“ 69
“ Cooling System Water Temperature Regulator - Replace“. 73

Every 4000 Service Hours

“ Air Compressor - Check“. 65
“ Engine Mounts - Inspect“ 76

Every 4000 Service Hours or 2 Years

“ Starting Motor - Inspect“ 88

Every 6000 Service Hours or 3 Years

“ Cooling System Coolant (ELC) - Change“ 70

Every 340 500 L (90 000 US gal) of Fuel

“ Overhaul Considerations“ 87

i07223730

Air Compressor - Check

(If equipped)

WARNING

Do not disconnect the air line from the air compressor governor without purging the air brake and the auxiliary air systems. Failure to purge the air brake and the auxiliary air systems before removing the air compressor and/or the air lines could cause personal injury.

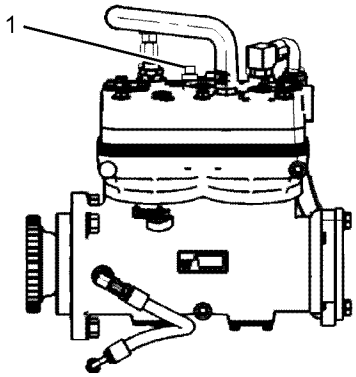

Illustration 32 g01212654

Typical example

(1) Pressure relief valve

WARNING

If the air compressor pressure relief valve that is mounted in the air compressor cylinder head is bypassing compressed air, there is a malfunction in the air system, possibly ice blockage. Under these conditions, your engine may have insufficient air for normal brake operation.

Do not operate the engine until the reason for the air bypass is identified and corrected. Failure to heed this warning could lead to property damage, personal injury, or death to the operator or bystanders.

The function of the pressure relief valve is to bypass air when there is a malfunction in the system for the air compressor.

The pressure relief valve for the air compressor releases air at 1723 kPa (250 psi). If the pressure relief valve for the air compressor exhausts, all personnel should be at a safe distance away from the air compressor. All personnel should also stay clear of the air compressor when the engine is operating and the air compressor is exposed.

Consult your Perkins dealer for further information concerning the air compressor.

i07297207

Air Shutoff - Test

To ensure that the air shutoff valve always shuts down when the engine ingests gaseous fumes, perform the test below at each oil change. A test failure can indicate wear in the block off plate to valve body interface and/or the bearing system.

1. Place engine at low idle speed. Ensure all accessories that are normally used for the application are in use, like a fan, or power takeoffs.
2. Actuate the air shutoff manually. On electrical operator air shutoffs, utilize an applicable power supply or jumper cables from the battery to energize the air shut-off solenoid. Ensure that the solenoid receives only a momentary signal to prevent overheating. On hydraulic operator air shutoffs, found on some hazardous location units, actuate by pulling the emergency stop handle.
3. Ensure that air shutoff was actuated and that the engine comes to a complete stop.

Note: As every application has different parasitic loads and inertia, the duration for the problem to occur cannot be specified. However, if the engine stumbles or attempts to continue running, these symptoms may be an indication that worn components may need replacement.

NOTICE

Actuating the air shutoff valve may result in oil leakage past the shaft seal in some cases. Repeated actuation of the air shutoff valve during loaded operation of the engine can result in mechanical damage to the turbocharger and reduce turbocharger life.

i08397622

Air Tank Moisture and Sediment - Drain

(If Equipped)

Moisture and sediment in the air starting system can cause the following conditions:

- Freezing
- Corrosion of internal parts

- Malfunction of the air starting system

WARNING

When opening the drain valve, wear protective gloves, a protective face shield, protective clothing, and protective shoes. Pressurized air could cause debris to be blown and result in personal injury.

1. Open the drain valve that is on the bottom of the air tank. Allow the moisture and sediment to drain.
2. Close the drain valve.
3. Check the air supply pressure. The air starting motor requires a minimum of 620 kPa (90 psi) of air pressure to operate properly. The maximum air pressure must not exceed 1550 kPa (225 psi). The normal air pressure will be 758 to 965 kPa (110 to 140 psi).

i08397621

Battery - Recycle

Always recycle a battery. Never discard a battery. Return used batteries to one of the following locations:

- A battery supplier
- An authorized battery collection facility
- A recycling facility

i01878164

Battery - Replace

WARNING

Batteries give off combustible gases which can explode. A spark can cause the combustible gases to ignite. This can result in severe personal injury or death.

Ensure proper ventilation for batteries that are in an enclosure. Follow the proper procedures in order to help prevent electrical arcs and/or sparks near batteries. Do not smoke when batteries are serviced.

WARNING

The battery cables or the batteries should not be removed with the battery cover in place. The battery cover should be removed before any servicing is attempted.

Removing the battery cables or the batteries with the cover in place may cause a battery explosion resulting in personal injury.

1. Switch the engine to the OFF position. Remove all electrical loads.
2. Turn off any battery chargers. Disconnect any battery chargers.
3. The NEGATIVE “-” cable connects the NEGATIVE “-” battery terminal to the NEGATIVE “-” terminal on the starter motor. Disconnect the cable from the NEGATIVE “-” battery terminal.
4. The POSITIVE “+” cable connects the POSITIVE “+” battery terminal to the POSITIVE “+” terminal on the starting motor. Disconnect the cable from the POSITIVE “+” battery terminal.

Note: Always recycle a battery. Never discard a battery. Return used batteries to an appropriate recycling facility.

5. Remove the used battery.
6. Install the new battery.

Note: Before the cables are connected, ensure that the engine start switch is OFF.

7. Connect the cable from the starting motor to the POSITIVE “+” battery terminal.
8. Connect the cable from the NEGATIVE “-” terminal on the starter motor to the NEGATIVE “-” battery terminal.

i02747977

Battery Electrolyte Level - Check

When the engine is not run for long periods of time or when the engine is run for short periods, the batteries may not fully recharge. Ensure a full charge in order to help prevent the battery from freezing. If batteries are correctly charged, the ammeter reading should be very near zero, when the engine is in operation.

WARNING

All lead-acid batteries contain sulfuric acid which can burn the skin and clothing. Always wear a face shield and protective clothing when working on or near batteries.

1. Remove the filler caps. Maintain the electrolyte level to the “FULL” mark on the battery.

   If the addition of water is necessary, use distilled water. If distilled water is not available use clean water that is low in minerals. Do not use artificially softened water.

2. Check the condition of the electrolyte with a suitable battery tester.
3. Install the caps.
4. Keep the batteries clean.

   Clean the battery case with one of the following cleaning solutions:

   - Use a solution of 0.1 kg (0.2 lb) baking soda and 1 L (1 qt) of clean water.
   - Use a solution of ammonium hydroxide.

   Thoroughly rinse the battery case with clean water.

i05424317

Battery or Battery Cable - Disconnect

WARNING

The battery cables or the batteries should not be removed with the battery cover in place. The battery cover should be removed before any servicing is attempted.

Removing the battery cables or the batteries with the cover in place may cause a battery explosion resulting in personal injury.

1. Turn the start switch to the OFF position. Turn the ignition switch (if equipped) to the OFF position and remove the key and all electrical loads.

Note: After the engine has stopped, allow 2 minutes in order for the diesel exhaust fluid lines to be purged before disconnecting the power.

2. Disconnect the negative battery terminal. Ensure that the cable cannot contact the terminal. When four 12 V batteries are involved, 2 negative connections must be disconnected.
3. Remove the positive connection.
4. Clean all disconnected connection and battery terminals.
5. Use a fine grade of sandpaper to clean the terminals and the cable clamps. Clean the items until the surfaces are bright or shiny. DO NOT remove material excessively. Excessive removal of material can cause the clamps to fit incorrectly. Coat the clamps and the terminals with a suitable silicone lubricant or petroleum jelly.
6. Tape the cable connections in order to help prevent accidental starting.
7. Proceed with necessary system repairs.
8. In order to connect the battery, connect the positive connection before the negative connector.

i07223806

Belts - Inspect/Adjust/Replace

(Alternator Belt)

The alternator belt adjustment is performed by an automatic tensioner. Belt tension is controlled by the tensioner and no manual adjustment will be required.

Inspect

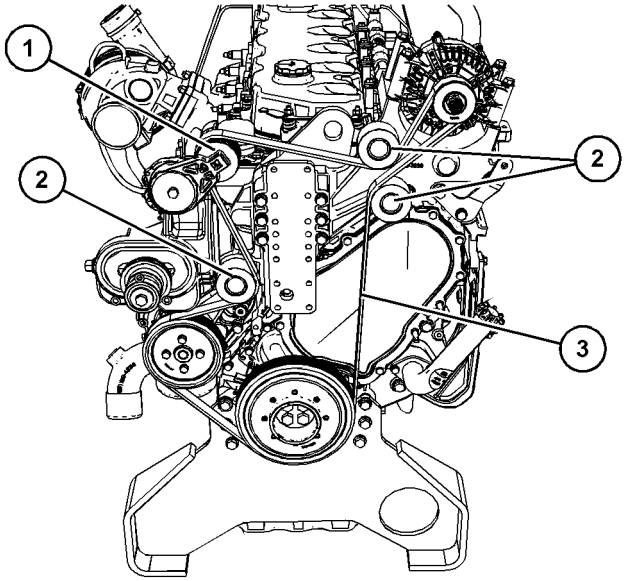

Illustration 33 g06262823

To maximize the engine performance, inspect the belt (3) for wear and for cracking. Replace the belt if the belt is worn or damaged.

- Inspect the belt for cracks, splits, glazing, grease, displacement of the cord and evidence of fluid contamination.

Ensure that the belt tensioner is securely installed. Visually inspect the belt tensioner (1) for damage. Check that the pulley on the tensioner rotates freely and that the bearing is not loose. Some engines have an idler pulleys (2). Ensure that the idler pulleys are securely installed. Visually inspect the idler pulley for damage. Ensure that the idler pulley can rotate freely and that the bearing is not loose. If necessary, replace damaged components.

Adjust

Belt adjustment is automatic.

Replace

To replace the belt, refer to Disassembly and Assembly, Alternator Belt - Remove and Install.

i07241729

Belts - Inspect/Adjust/Replace

(Fan Belts)

Belt tension should be checked initially between the first 20 to 40 hours of engine operation.

For applications that require multiple drive belts, replace the belts in matched sets. Replacing only one belt of a matched set will cause the new belt to carry more load because the older belt is stretched. The additional load on the new belt could cause the new belt to break.

If the belts are too loose, vibration causes unnecessary wear on the belts and pulleys. Loose belts may slip enough to cause overheating. If the belts are too tight, unnecessary stresses are placed on the pulley bearings and on the belts. Belts that are too tight may shorten the service life of the components.

Inspect

To maximize the engine performance, inspect the belts for wear and for cracking. Also, check for fluid contamination. Replace belts that are worn or damaged.

Adjust

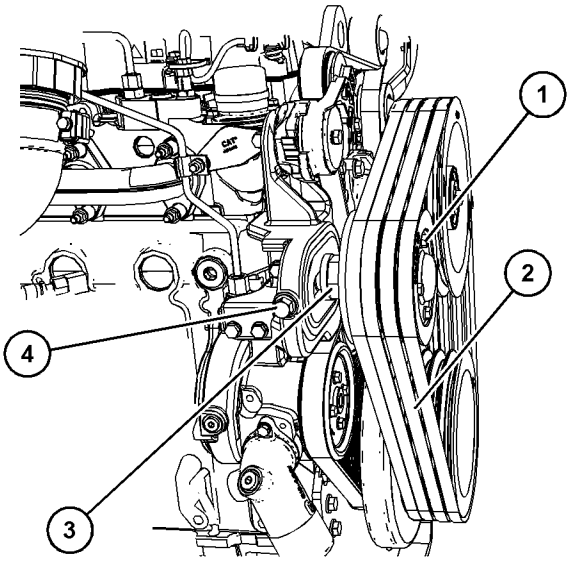

Illustration 34 g06262893

Typical example

1. Remove the belt guard, refer to OEM for the correct procedure.
2. Loosen lock nut (3). Rotating nut (4) counterclockwise will move pulley (1) and loosen belts (2). Rotating nut (4) clockwise will move pulley (1) and tighten belts (2).
3. With the correct tension set, tighten nut (3). Tighten nut (3) to a torque of 102 N·m (75 lb ft).
4. Use a suitable belt tension tool to set the belt tension.

5. Reinstall the belt guard, refer to OEM for the correct procedure.

If new drive belts are installed, check the drive belt tension again after 30 minutes of engine operation at the rated rpm.

Belt Tension Chart

Table 13

New Belt Tension	Used Belt Tension	Reset Tension
801 N (180 lb)	645 N (145 lb)	378 N (84 lb)

Replace

To replace the fan belts, refer to Disassembly and Assembly, V-Belts- Remove and Install.

i06606846

Cooling System Coolant (DEAC) - Change

Clean the cooling system and flush the cooling system before the recommended maintenance interval if the following conditions exist:

- The engine overheats frequently.
- Foaming is observed.
- The oil has entered the cooling system and the coolant is contaminated.
- The fuel has entered the cooling system and the coolant is contaminated.

Note: Inspect the water pump and the water temperature regulator after the cooling system has been drained.

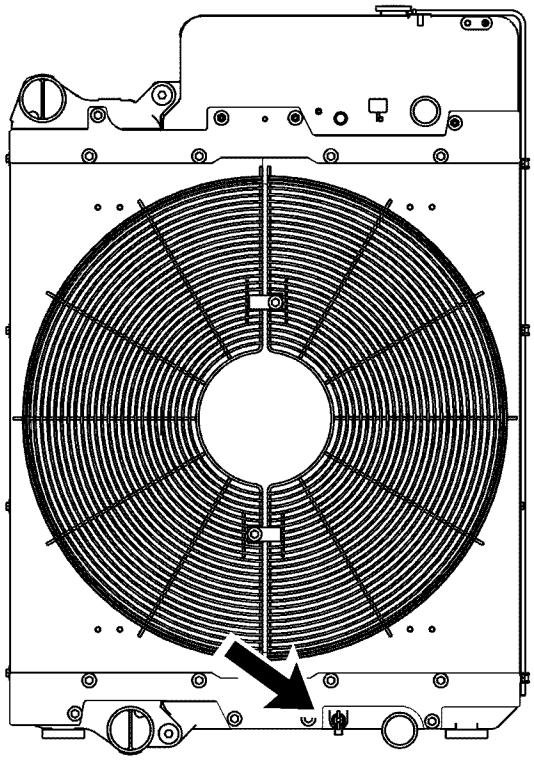

Illustration 35 g02351659

The cooling system drain valve is towards the bottom of the radiator.

Drain

WARNING

Pressurized System: Hot coolant can cause serious burns. To open the cooling system filler cap, stop the engine and wait until the cooling system components are cool. Loosen the cooling system pressure cap slowly in order to relieve the pressure.

1. Stop the engine and allow the engine to cool. Loosen the cooling system filler cap slowly in order to relieve any pressure. Remove the cooling system filler cap.
2. Open the cooling system drain valve.

   Allow the coolant to drain.

Flush

1. Flush the cooling system with clean water in order to remove any debris.
2. Close the drain valve.

NOTICE
Fill the cooling system no faster than 19 L (5 US gal) per minute to avoid air locks.

3. Fill the cooling system with clean water and operate the engine, ensure that the thermostat opens. Stop the engine and allow the engine to cool.
4. Drain the cooling system.
5. Fill the cooling system with clean water and operate the engine until the engine is warmed to 82 °C (180 °F).
6. Stop the engine and allow the engine to cool. Drain the cooling system.

Fill

NOTICE
Fill the cooling system no faster than 19 L (5 US gal) per minute to avoid air locks.

1. Fill the cooling system with coolant/antifreeze. Refer to this Operation and Maintenance Manual, “Fluid Recommendations” topic for more information on cooling system specifications. Do not install the cooling system filler cap.
2. Start and run the engine at low idle. Increase the engine rpm to 1500 rpm. Run the engine at high idle for 1 minute to purge the air from the cavities of the engine block. Stop the engine.
3. Check the coolant level. Maintain the coolant level within 13 mm (0.5 inch) below the bottom of the pipe for filling. Maintain the coolant level within 13 mm (0.5 inch) to the proper level on the sight glass.
4. Clean the cooling system filler cap. Inspect the gasket that is on the cooling system filler cap. If the gasket that is on the cooling system filler cap is damaged, discard the old filler cap and install a new filler cap. If the gasket that is on the cooling system filler cap is not damaged, perform a pressure test. The correct pressure for the cooling system filler cap is stamped on the face of the cooling system filler cap. If the cooling system filler cap does not retain the correct pressure, install a new cooling system filler cap.
5. Start the engine and inspect the cooling system for leaks and for proper operating temperature.

i06606848

Cooling System Coolant (ELC) - Change

NOTICE
Perkins ELC must be using with an extender in order to achieve 12000 hours operation. For more information on a suitable extender contact your Perkins distributor.

Clean the cooling system and flush the cooling system before the recommended maintenance interval if the following conditions exist:

- The engine overheats frequently.
- Foaming is observed.
- The oil has entered the cooling system and the coolant is contaminated.
- The fuel has entered the cooling system and the coolant is contaminated.

Note: When the cooling system is cleaned, only clean water is needed when the ELC is drained and replaced.

Note: Inspect the water pump and the water temperature regulator after the cooling system has been drained.

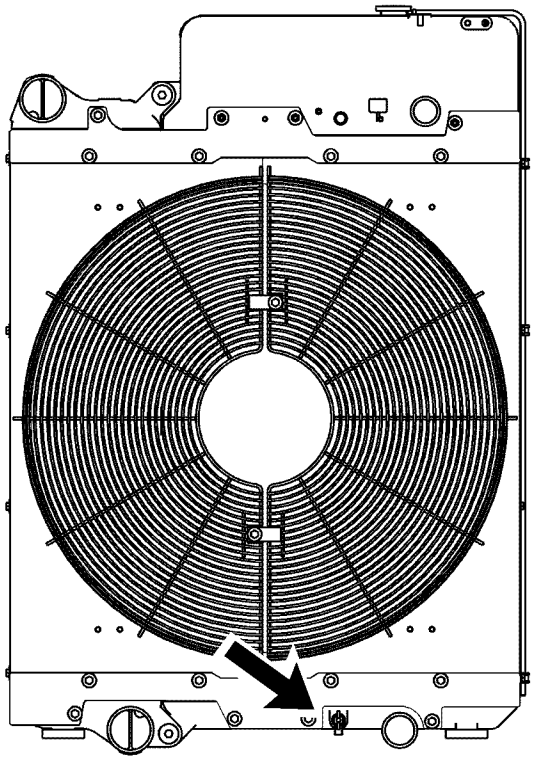

Illustration 36 g02351659

Drain

WARNING

Pressurized System: Hot coolant can cause serious burns. To open the cooling system filler cap, stop the engine and wait until the cooling system components are cool. Loosen the cooling system pressure cap slowly in order to relieve the pressure.

1. Stop the engine and allow the engine to cool. Loosen the cooling system filler cap slowly to relieve any pressure. Remove the cooling system filler cap.
2. Open the cooling system drain valve.

   Allow the coolant to drain.

Flush

1. Flush the cooling system with clean water to remove any debris.
2. Close the drain valve.

NOTICE
Fill the cooling system no faster than 19 L (5 US gal) per minute to avoid air locks.

3. Fill the cooling system with clean water. Install the cooling system filler cap.
4. Start and run the engine at low idle until the temperature reaches 49 °C to 66 °C (120 °F to 150 °F).
5. Stop the engine and allow the engine to cool. Loosen the cooling system filler cap slowly to relieve any pressure. Remove the cooling system filler cap. Open the drain valve. Allow the water to drain. Flush the cooling system with clean water. Close the drain valve.

Fill

NOTICE
Fill the cooling system no faster than 19 L (5 US gal) per minute to avoid air locks.

1. Fill the cooling system with Extended Life Coolant (ELC). Refer to this Operation and Maintenance Manual, “Fluid Recommendations” for more information on cooling system specifications. Do not install the cooling system filler cap.
2. Start and run the engine at low idle. Increase the engine rpm to high idle. Run the engine at high idle for 1 minute to purge the air from the cavities of the engine block. Stop the engine.
3. Check the coolant level. Maintain the coolant level within 13 mm (0.5 inch) below the bottom of the pipe for filling. Maintain the coolant level within 13 mm (0.5 inch) to the proper level on the sight glass.
4. Clean the cooling system filler cap. Inspect the gasket that is on the cooling system filler cap. Only install the used filler cap if the gasket is not damaged. Test the cap for the correct pressure. The correct pressure for the cooling system filler cap is stamped on the face of the cooling system filler cap. If the cooling system filler cap does not retain the correct pressure, install a new cooling system filler cap.

5. Start the engine and Inspect the cooling system for leaks and for proper operating temperature.

i06606851

Cooling System Coolant Level - Check

Check the coolant level when the engine is stopped and cool.

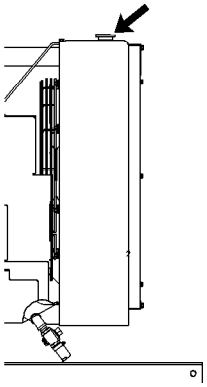

Illustration 37 g00285520
Cooling system filler cap

WARNING

Pressurized System: Hot coolant can cause serious burns. To open the cooling system filler cap, stop the engine and wait until the cooling system components are cool. Loosen the cooling system pressure cap slowly in order to relieve the pressure.

1. Remove the cooling system filler cap slowly to relieve pressure.
2. Maintain the coolant level within 13 mm (0.5 inch) of the bottom of the filler pipe. If the engine is equipped with a sight glass, maintain the coolant level to the proper level in the sight glass.

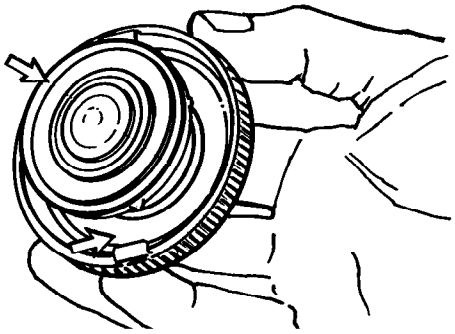

Illustration 38 g00103639
Typical filler cap gaskets

3. Clean the cooling system filler cap and check the condition of the filler cap gaskets. Replace the cooling system filler cap if the filler cap gaskets are damaged. Reinstall the cooling system filler cap.
4. Inspect the cooling system for leaks.

i03644948

Cooling System Supplemental Coolant Additive (SCA) - Test/Add

WARNING

Cooling system coolant additive contains alkali. To help prevent personal injury, avoid contact with the skin and the eyes. Do not drink cooling system coolant additive.

Test for SCA Concentration

Heavy-Duty Coolant/Antifreeze and SCA

NOTICE
Do not exceed the recommended six percent supplemental coolant additive concentration.

Use a Coolant Conditioner Test Kit in order to check the concentration of the SCA.

Add the SCA, If Necessary

NOTICE
Do not exceed the recommended amount of supplemental coolant additive concentration. Excessive supplemental coolant additive concentration can form deposits on the higher temperature surfaces of the cooling system, reducing the engine's heat transfer characteristics. Reduced heat transfer could cause cracking of the cylinder head and other high temperature components. Excessive supplemental coolant additive concentration could also result in radiator tube blockage, overheating, and/or accelerated water pump seal wear. Never use both liquid supplemental coolant additive and the spin-on element (if equipped) at the same time. The use of those additives together could result in supplemental coolant additive concentration exceeding the recommended maximum.

WARNING

Pressurized System: Hot coolant can cause serious burns. To open the cooling system filler cap, stop the engine and wait until the cooling system components are cool. Loosen the cooling system pressure cap slowly in order to relieve the pressure.

NOTICE
When any servicing or repair of the engine cooling system is performed the procedure must be performed with the engine on level ground. This will allow you to accurately check the coolant level. This will also help in avoiding the risk of introducing an air lock into the coolant system.

1. Slowly loosen the cooling system filler cap in order to relieve the pressure. Remove the cooling system filler cap.

Note: Always discard drained fluids according to local regulations.

2. If necessary, drain some coolant from the cooling system into a suitable container in order to allow space for the extra SCA.
3. Add the correct amount of SCA. Refer to the Operation and Maintenance Manual, “Refill Capacities and Recommendations” for more information on SCA requirements.
4. Clean the cooling system filler cap and inspect the gasket. If the gasket is damaged, discard the old filler cap and install a new filler cap. If the gasket is not damaged, use a suitable pressurizing pump in order to pressure test the filler cap. The correct pressure is stamped on the face of the filler cap. If the filler cap does not retain the correct pressure, install a new filler cap.

i07227862

Cooling System Water Temperature Regulator - Replace

Replace the water temperature regulator before the water temperature regulator fails. Replacing the water temperature regulator is a recommended preventive maintenance practice. Replacing the water temperature regulator reduces the chances for unscheduled downtime. Refer to this Operation and Maintenance Manual, “Maintenance Interval Schedule” for the correct maintenance interval.

A water temperature regulator that fails in a partially opened position can cause overheating or overcooling of the engine.

A water temperature regulator that fails in the closed position can cause excessive overheating. Excessive overheating could result in cracking of the cylinder head or piston seizure problems.

A water temperature regulator that fails in the open position will cause the engine operating temperature to be too low during partial load operation. Low engine operating temperatures during partial loads could cause an excessive carbon buildup inside the cylinders. This excessive carbon buildup could result in accelerated wear of the piston rings and wear of the cylinder liner.

NOTICE
Failure to replace your water temperature regulator on a regularly scheduled basis could cause severe engine damage.

Perkins engines incorporate a shunt bypass design cooling system and require operating the engine with a water temperature regulator installed.

If the water temperature regulator is installed incorrectly, the engine may overheat, causing cylinder head damage. Ensure that the new water temperature regulator is installed in the original position. Ensure that the water temperature regulator vent hole is open.

Do not use liquid gasket material on the gasket or cylinder head surface.

Refer to two articles in the Disassembly and Assembly Manual, “Water Temperature Regulators - Remove and Water Temperature Regulators - Install” for the correct replacement procedure of the water temperature regulator, or consult your Perkins dealer.

Note: If the water temperature regulators are replaced, drain the coolant from the cooling system to a level that is below the water temperature regulator housing.

i02151646

Driven Equipment - Check

Refer to the OEM specifications for more information on the following maintenance recommendations for the driven equipment:

- Inspection
- Adjustment
- Lubrication
- Other maintenance recommendations

Perform any maintenance for the driven equipment which is recommended by the OEM.

i02568158

Engine - Clean

WARNING

Personal injury or death can result from high voltage.

Moisture can create paths of electrical conductivity.

Make sure that the electrical system is OFF. Lock out the starting controls and tag the controls “DO NOT OPERATE” .

NOTICE

Accumulated grease and oil on an engine is a fire hazard. Keep the engine clean. Remove debris and fluid spills whenever a significant quantity accumulates on the engine.

Periodic cleaning of the engine is recommended. Steam cleaning the engine will remove accumulated oil and grease. A clean engine provides the following benefits:

- Easy detection of fluid leaks
- Maximum heat transfer characteristics
- Ease of maintenance

Note: Caution must be used in order to prevent electrical components from being damaged by excessive water when you clean the engine. Avoid electrical components such as the alternator, the starter, and the Electronic Control Module (ECM).

i07003542

Engine Air Cleaner Element - Replace

NOTICE

Never run the engine without an air cleaner element installed. Never run the engine with a damaged air cleaner element. Do not use air cleaner elements with damaged pleats, gaskets or seals. Dirt entering the engine causes premature wear and damage to engine components. Air cleaner elements help to prevent airborne debris from entering the air inlet.

NOTICE

Never service the air cleaner element with the engine running since this will allow dirt to enter the engine.

Ensure that the engine cannot start before any service or repair is performed.

Servicing the Air Cleaner Element

Note: The air filter system may not have been provided by Perkins. The procedure that follows is for a typical air filter system. Refer to the OEM information for the correct procedure.

If the air cleaner element becomes plugged, the air can split the material of the air cleaner element. Unfiltered air will drastically accelerate internal engine wear. Refer to the OEM information for the correct air cleaner elements for your application.

- Check the air cleaner service indicator daily.
- Check the pre-cleaner (if equipped) and the dust bowl daily for accumulation of dirt and debris. Remove any dirt and debris, as needed.
- Operating in dirty conditions may require more frequent service of the air cleaner element.

Replace the dirty air cleaner elements with new air cleaner elements. Before installation, the air cleaner elements should be thoroughly checked for tears and/or holes in the filter material. Inspect the gasket or the seal of the air cleaner element for damage. Maintain a supply of suitable air cleaner elements for replacement purposes.

Dual Element Air Cleaner

The dual element air cleaner contains a primary air cleaner element and a secondary air cleaner element.

When the engine is operating in environments that are dusty or dirty, air cleaner elements may require more frequent replacement.

If equipped, perform maintenance on the pre-cleaner or the dust bowl before performing maintenance on the air filter elements.

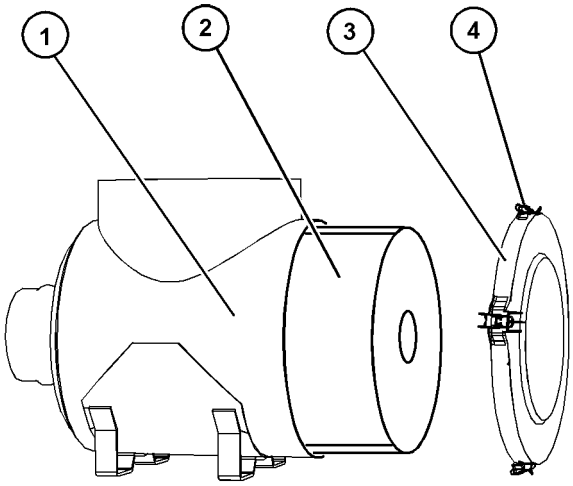

Illustration 39 g06043462

Typical example

Note: Do not allow dirt to enter the air system during replacement of the air filter elements.

1. Clean the outer casing of the air cleaner before removing the end cover (3).

Note: Before removal, check the orientation of the end cover (3). Some air cleaners the end cover must be installed in the correctly aligned position.

2. Release the clips (4) and remove the end cover (3) from air cleaner body (1).

3. Remove the primary air filter element (2) and remove the secondary air filter element (not shown) from air cleaner body (1). Ensure that the inner body of the air cleaner is clean and free from dirt. Ensure that the inner of the air cleaner cover , (3) is clean and free from dirt.

4. Install a new secondary air filter element (not shown). Install a new primary air filter element (2) and install end cover (3). Ensure that the clips (4) are located securely.

i08397637

Engine Air Cleaner Service Indicator - Inspect

(If Equipped)

Some engines may be equipped with a different service indicator.

Some engines are equipped with a differential gauge for inlet air pressure. The differential gauge for inlet air pressure displays the difference in the pressure that is measured before and after the air cleaner element. As the air cleaner element becomes dirty, the pressure differential rises. If your engine is equipped with a different type of service indicator, follow the OEM recommendations in order to service the air cleaner service indicator.

The service indicator may be mounted on the clean side of the air cleaner housing or in a remote location.

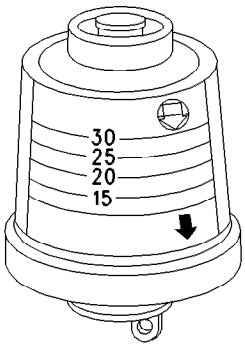

Illustration 40 g00103777

Typical service indicator

Observe the service indicator. The air cleaner element should be cleaned or the air cleaner element should be replaced when one of the following conditions occur:

- The yellow diaphragm enters the red zone.

- The red piston locks in the visible position.

Test the Service Indicator

Service indicators are important instruments.

- Check for ease of resetting. The service indicator should reset in less than three pushes.
- Check the movement of the service indicator core when the engine is run at full load speed. The core should latch approximately at the greatest vacuum that is attained.

If the service indicator does not reset easily, or if the core does not latch at the greatest vacuum, the service indicator should be replaced. If the new service indicator will not reset, the hole for the service indicator may be plugged.

If necessary, replace the service indicator more frequently in environments that are severely dusty. Replace the service indicator annually regardless of the operating conditions. Replace the service indicator when the engine is overhauled, and whenever major engine components are replaced.

Note: When a new service indicator is installed, excessive force may crack the top of the service indicator. Tighten the service indicator to a torque of 2 N·m (18 lb in).

i07819538

Engine Mounts - Inspect

Note: The engine mounts may not have been supplied by Perkins. Refer to the Original Equipment Manufacturer (OEM) information for further details on the engine mounts and the correct bolt torque.

Inspect the engine mounts for deterioration and for correct bolt torque. Excessive engine vibration can be caused by the following conditions:

- Incorrect mounting of the engine
- Deterioration of the engine mounts
- Loose engine mounts

Any engine mount that shows deterioration should be replaced. Refer to the OEM information for the recommended torques.

When the engine mounts are supplied by Perkins the maintenance procedure will be supplied in the Disassembly and Assembly manual for your engine.

i07227918

Engine Oil Level - Check

WARNING

Hot oil and hot components can cause personal injury. Do not allow hot oil or hot components to contact the skin.

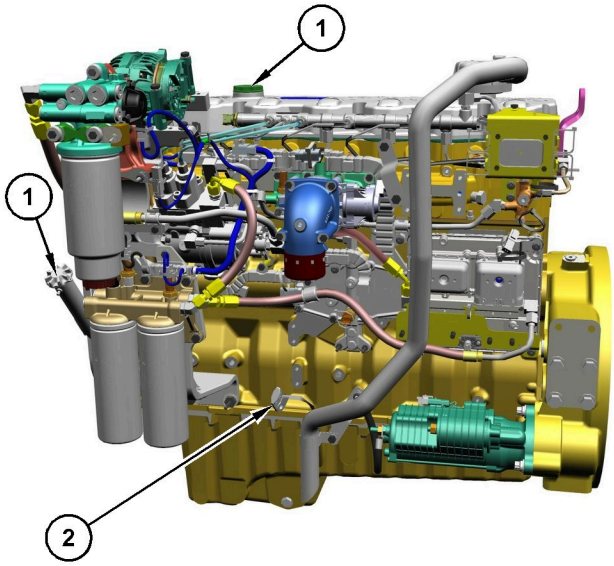

Illustration 41 g06257757

Typical example

(1) Oil filler cap
(2) Oil level gauge (Dipstick)

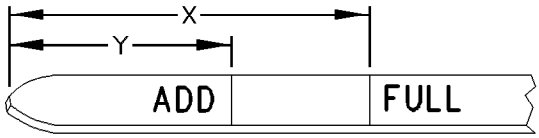

Illustration 42 g00110310

Partial view of the oil level gauge

(Y) “ADD” mark
(X) “FULL” mark

NOTICE
Perform this maintenance with the engine stopped.

NOTICE

Engine damage can occur if the crankcase is filled above the “FULL” mark on the oil level gauge (dipstick).

An overfull crankcase can cause the crankshaft to dip into the oil. This will reduce the power that is developed and also force air bubbles into the oil. These bubbles (foam) can cause the following problems: reduction of the oil's ability to lubricate, reduction of oil pressure, inadequate cooling, oil blowing out of the crankcase breathers and excessive oil consumption.

Excessive oil consumption will cause deposits to form on the pistons and in the combustion chamber. Deposits in the combustion chamber lead to the following problems: guttering of the valves, packing of carbon under the piston rings and wear of the cylinder liner.

If the oil level is above the “FULL” mark on the oil level gauge, drain some of the oil immediately.

1. Remove the oil level gauge to check engine oil level. Maintain the oil level between the “ADD” mark (Y) and the “FULL” mark (X) on the oil level gauge (1). Do not fill the crankcase above “FULL” mark (X).
2. If engine oil is required, remove oil filler cap to add engine oil.
3. To choose the correct type of oil for this engine, refer to this Operation and Maintenance Manual, “Fluid Recommendations”.
4. Clean the oil filler cap and install the oil filler cap.
5. Record the amount of oil that is added. For the next oil sample and analysis, include the total amount of oil that has been added since the previous sample. Recording this information helps to provide the most accurate oil analysis.

i01907674

Engine Oil Sample - Obtain

The condition of the engine lubricating oil may be checked at regular intervals as part of a preventive maintenance program. Perkins include an oil sampling valve as an option. The oil sampling valve (if equipped) is included in order to regularly sample the engine lubricating oil. The oil sampling valve is positioned on the oil filter head or the oil sampling valve is positioned on the cylinder block.

Perkins recommends using a sampling valve in order to obtain oil samples. The quality and the consistency of the samples are better when a sampling valve is used. The location of the sampling valve allows oil that is flowing under pressure to be obtained during normal engine operation.

Obtain the Sample and the Analysis

WARNING

Hot oil and hot components can cause personal injury. Do not allow hot oil or hot components to contact the skin.

In order to help obtain the most accurate analysis, record the following information before an oil sample is taken:

- The date of the sample
- Engine model
- Engine number
- Service hours on the engine
- The number of hours that have accumulated since the last oil change
- The amount of oil that has been added since the last oil change

Ensure that the container for the sample is clean and dry. Also ensure that the container for the sample is clearly labelled.

To ensure that the sample is representative of the oil in the crankcase, obtain a warm, well mixed oil sample.

To avoid contamination of the oil samples, the tools and the supplies that are used for obtaining oil samples must be clean.

The sample can be checked for the following: the quality of the oil, the existence of any coolant in the oil, the existence of any ferrous metal particles in the oil and the existence of any nonferrous metal particles in the oil.

i11087995

Engine Oil and Filter - Change

WARNING

Hot oil and hot components can cause personal injury. Do not allow hot oil or hot components to contact the skin.

NOTICE

Care must be taken to ensure that fluids are contained during performance of inspection, maintenance, testing, adjusting and repair of the product. Be prepared to collect the fluid with suitable containers before opening any compartment or disassembling any component containing fluids.

Dispose of all fluids according to local regulations and mandates.

NOTICE

Keep all parts clean from contaminants.

Contaminants may cause rapid wear and shortened component life.

Do not drain the engine lubricating oil when the engine is cold. As the engine lubricating oil cools, suspended waste particles settle on the bottom of the oil pan. The waste particles are not removed with draining cold oil. Drain the oil pan with the engine stopped. Drain the oil pan with the oil warm. This draining method allows the waste particles that are suspended in the oil to be drained properly.

Failure to follow this recommended procedure will cause the waste particles to be recirculated through the engine lubrication system with the new oil.

Oil and Filter Change Intervals

The standard engine oil and filter change period is 500 hours. There are several other factors that can alter the standard engine oil and filter change of 500 hours.

- If the engine is using engine oil analysis to determine oil and filter change period.
- The engine is working in a severe service environment/Load Factor
- Infrequent operation of the engine

Refer to this Operation and Maintenance Manual, “Severe Service Application” for more information on reducing the engine oil and filter change period. For severe service applications the recommended oil and filter change period is 250 hours.

If the engine is operated in severe service conditions, Perkins recommends the use of engine oil sampling. Refer to this Operation and Maintenance Manual, Engine Oil sample - Obtain for more information.

If the engine is operated infrequently less than 500 hours in a 12-month period, then the engine oil and filter change should be conducted yearly.

Table 14

Engine Oil	Maximum Oil Drain - Hours(1)	Viscosity Grade	Expected Ambient Temperatures				Air and Oil Filters	Oil Sampling Interval - Hours
			Min °C	Max °C	Min °C	Max °C		
Perkins DEO-ULS	1000(2)	10W-30	-18	40	0	104	Perkins Preferred	250
Perkins DEO-ULS	1000	15W-40	-10	50	14	122	Perkins Preferred	250
Commercial CK-4 (preferred) Commercial CI-4 (minimum)	500	15W-40	-10	50	14	122	Perkins or Commercial	250

(1) Replace engine oil and filter if oil sampling indicates engine oil has reached the end of useful life.
(2) Engine oil and filter change is required at initial 500 hrs of engine life.

Table 15

Oil Change Interval for 1506A, 1506C, and 1506D Industrial Engines (1)		
Multigrade Oil Type	Operating Conditions	
	Normal	Severe Service Application
Perkins DEO or Perkins DEO-ULS Preferred	500 hr	250 hr
Oil meeting the requirements of the Perkins ECF-3 Specification or the API CK-4 classification 8 minimum TBN Preferred	500 hr	250 hr
Oil meeting the requirements of the API CI-4 TBN below 10.4	500 hr	250 hr

(1) The standard oil change interval in this engine is 500 hours, if the operating conditions and recommended oil types that are listed in this table are met. If the type of oil, the quality of the oil and the operating conditions fails to meet certain standards, the oil change intervals must be decreased to 250 hours.

Drain the Engine Lubricating Oil

Note: Ensure that the vessel that will be used is large enough to collect the waste oil.

After the engine has been run at the normal operating temperature, stop the engine. Attach a “DO NOT OPERATE” or a similar warning tag to the ignition keyswitch before the engine is serviced.

Use one of the following methods to drain the engine oil pan:

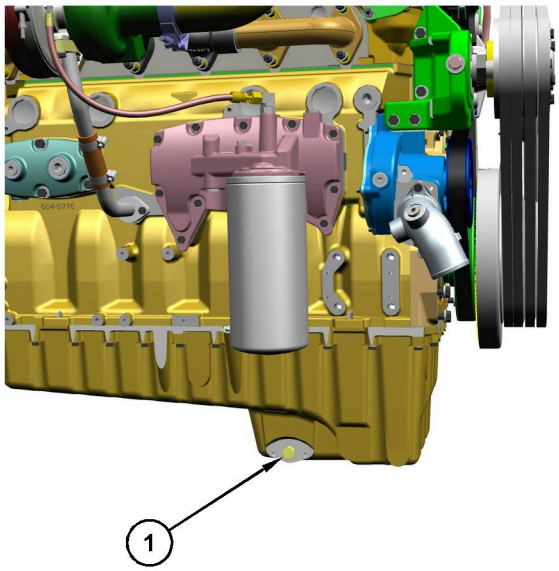

Illustration 43 g06257791

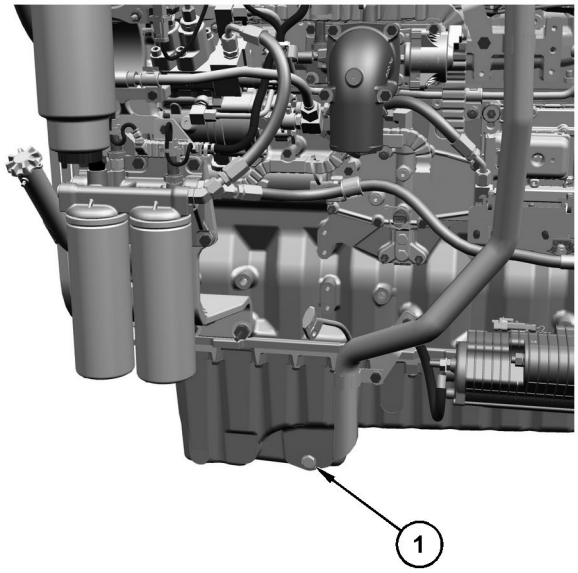

Illustration 44 g06257788

- If the engine is equipped with a drain valve, turn the drain valve knob counterclockwise to drain the oil. After the oil has drained, turn the drain valve knob clockwise to close the drain valve.
- If the engine is not equipped with a drain valve, remove the oil drain plug (1) to allow the oil to drain. If the engine is equipped with a shallow oil pan, remove the bottom oil drain plugs from both ends of the oil pan.

After the oil has drained, the oil drain plugs should be cleaned and installed. If necessary, replace the O ring seal. Tighten the drain plug to 34 N·m (25 lb ft).

Replace the Oil Filter

NOTICE
Perkins oil filters are manufactured to Perkins specifications. Use of an oil filter that is not recommended by Perkins could result in severe damage to the engine bearings, crankshaft, and so forth. As a result of the larger waste particles from unfiltered oil entering the engine lubricating system. Only use oil filters recommended by Perkins.

1. Remove the oil filter with a suitable tool.

Note: The following actions can be carried out as part of the preventive maintenance program.

2. Cut the oil filter open with a suitable tool. Break apart the pleats and inspect the oil filter for metal debris. An excessive amount of metal debris in the oil filter may indicate early wear or a pending failure.

Use a magnet to differentiate between the ferrous metals and the nonferrous metals that are found in the oil filter element. Ferrous metals may indicate wear on the steel and cast iron parts of the engine.

Nonferrous metals may indicate wear on the aluminum parts, brass parts, or bronze parts of the engine. Parts that may be affected include the following items: main bearings, rod bearings, and turbocharger bearings.

During to normal wear small amounts of debris may be found in the oil filter.

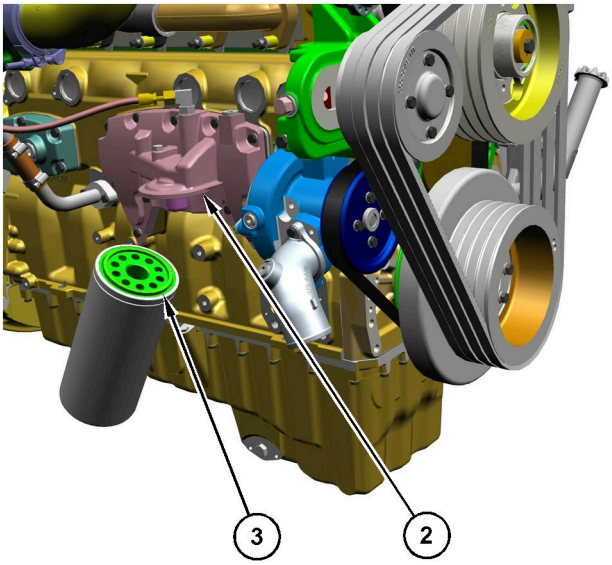

Illustration 45 g06257798
Typical example

3. Clean sealing surface (2).

4. Apply clean engine oil to O ring seal (3) for the new oil filter.

NOTICE
Do not fill the oil filters with oil before installing them. This oil would not be filtered and could be contaminated. Contaminated oil can cause accelerated wear to engine components or engine damage.

5. Install the new oil filter. Spin on the oil filter until the O ring contacts the sealing surface (2). Then rotate the oil filter ¾ of a full turn.

Fill the Oil Pan

1. Remove the oil filler cap. Refer to this Operation and Maintenance Manual, “Fluid Recommendations” for more information on suitable oils. Fill the oil pan with the correct amount of new engine lubricating oil. Refer to this Operation and Maintenance Manual, “Refill Capacities” for more information on refill capacities.

NOTICE
If equipped with an auxiliary oil filter system or a remote filter system, follow the OEM or the filter manufactures recommendations. Under-filling or over filling the crankcase with oil can cause engine damage.

2. Start the engine and run the engine at “LOW IDLE” for 2 minutes. Perform this procedure to ensure that the lubrication system has oil and that the oil filters are filled. Inspect the oil filter for oil leaks.

3. Stop the engine and allow the oil to drain back to the oil pan for a minimum of 10 minutes.

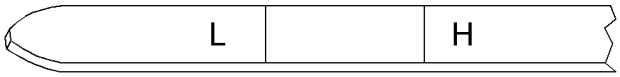

Illustration 46 g02173847
“L” Low
“H” High

4. Remove the engine oil level gauge to check the oil level. Maintain the oil level between the “L” and “H” marks on the engine oil level gauge. Do not fill the crankcase above the “H” mark.

i07478142

Engine Valve Lash - Check

WARNING

Ensure that the engine cannot be started while this maintenance is being performed. To help prevent possible injury, do not use the starting motor to turn the flywheel.

Hot engine components can cause burns. Allow additional time for the engine to cool before measuring/adjusting valve lash clearance.

NOTICE
Only qualified service personel should perform this maintenance. Refer to the Service Manual or your authorized Perkins dealer or your Perkins distributor for the complete valve lash adjustment procedure.

Operation of Perkins engines with incorrect valve lash can reduce engine efficiency, and also reduce engine component life.

The initial valve lash adjustment on new engines, rebuilt engines, or remanufactured engines is necessary due to the initial wear of the valve train components and to the seating of the valve train components.

This maintenance is recommended as part of a lubrication and preventive maintenance schedule to help provide maximum engine life.

Note: All engine ratings must have the engine valve lash performed at 2500 hours.

Ensure that the engine is stopped before measuring the valve lash. To obtain an accurate measurement, allow the valves to cool before this maintenance is performed.

During valve adjustment, visibly inspect the valve train of wear or damage.

Refer to Systems Operation, Testing and Adjusting, “Engine Valve Lash - Inspect/Adjust” for more information.

i07229442

Fuel System - Prime

NOTICE
Do not allow dirt to enter the fuel system. Thoroughly clean the area around a fuel system component that will be disconnected. Fit a suitable cover over any disconnected fuel system components.

Key-on Priming (if equipped)

1. Turn the engine start switch to the ON position. Leave the engine start switch in the ON position for 2 minutes.
2. Verify that the water separator is full of fuel.
3. If the water separator is not full of fuel, turn the engine start switch OFF and then turn the engine start switch ON. Turning the switch OFF, then ON will cycle the fuel priming pump again.
4. When the water separator is full of fuel, attempt to start the engine. If the engine starts and the engine runs rough or the engine misfires, operate at low idle until the engine is running smoothly. If the engine cannot be started, or if the engine continues to misfire or smoke, repeat Step 1.

Manual Switch Priming (if equipped)

The manual switch is located on the primary filter base/electric priming pump assembly.

1. Hold the manual switch in the up position until fuel has filled the water separator.
2. Continue to hold the switch for 30 seconds after the water separator is full.
3. Attempt to start the engine. If engine starts and runs rough or misfires, operate at low idle until the engine is running smoothly. If the engine cannot be started, continue to prime the fuel system for 30 more seconds.

i07229468

Fuel System Primary Filter (Water Separator) Element - Replace

WARNING

Personal injury or death may result from failure to adhere to the following procedures.

Fuel leaked or spilled onto hot surfaces or electrical components can cause a fire.

Clean up all leaked or spilled fuel. Do not smoke while working on the fuel system.

Turn the disconnect switch OFF or disconnect the battery when changing fuel filters.

NOTICE
Do not fill the fuel filters with fuel before installing the fuel filters. The fuel will not be filtered and could be contaminated. Contaminated fuel will cause accelerated wear to fuel system parts.

NOTICE
Care must be taken to ensure that fluids are contained during performance of inspection, maintenance, testing, adjusting, and repair of the product. Be prepared to collect the fluid with suitable containers before opening any compartment or disassembling any component containing fluids.

Dispose of all fluids according to local regulations and mandates.

1. Turn the start switch to the OFF position or disconnect the battery (starting motor) when maintenance is performed on a fuel filter.
2. Shut off the fuel supply.

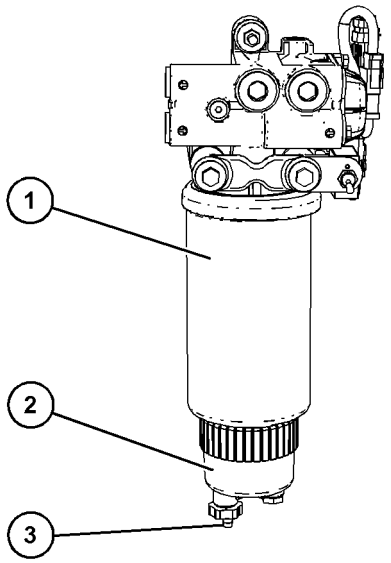

Illustration 47 g06264328
(1) filter body
(2) bowl
(3) drain valve

Note: Refer to this Operation and Maintenance Manual, “General Hazard Information” that pertains to containing fluid spillage.

3. Turn drain valve (3) counterclockwise to open. The drain valve is on the bottom of the water separator.
4. Drain the water and sediment into a suitable container. Dispose of the drained fluids and used filters according to local regulations.
5. Close the drain valve.
6. Hold the bottom of the filter while you loosen the bowl. Remove the bowl.
7. Turn the filter counterclockwise to loosen the filter. If the filter will not turn, use a strap wrench to loosen the filter.
8. Remove the filter and discard the filter. Clean the bottom of the filter mounting base. Make sure that all the old filter seal is removed from the bottom groove of the opening in the base.
9. Clean the water separator bowl and clean the groove for the seal. Inspect the seal. If the seal is worn or damaged, replace the seal.
10. Lubricate the seal with clean diesel fuel or lubricate the seal with clean motor oil. Place the seal in the groove on the water separator bowl.
11. Install the water separator bowl onto the new fuel filter by hand. Tighten the bowl assembly to 15 15 N·m (11 lb ft).
12. Apply clean diesel fuel to the seal of the new filter.
13. Install the new filter onto the base. Tighten the filter by hand until the seal contacts the filter base. Tighten the filter by anadditional1/3 to 1/2 rotation.

Note: The secondary fuel filter should be replaced at the same time. See this Operation and Maintenance Manual, “Fuel System Secondary Filter - Replace” for further information.

14. Open the fuel shutoff valve.
15. Reconnect the battery, if necessary.
16. Purge the air from the fuel system. See this Operation and Maintenance Manual, “Fuel System - Prime” for further instructions.
17. Stop the engine and check for leaks.

i07229452

Fuel System Primary Filter/ Water Separator - Drain

WARNING

Fuel leaked or spilled onto hot surfaces or electrical components can cause a fire. To help prevent possible injury, turn the start switch off when changing fuel filters or water separator elements. Clean up fuel spills immediately.

NOTICE
Do not allow dirt to enter the fuel system. Thoroughly clean the area around a fuel system component that will be disconnected. Fit a suitable cover over any disconnected fuel system components.

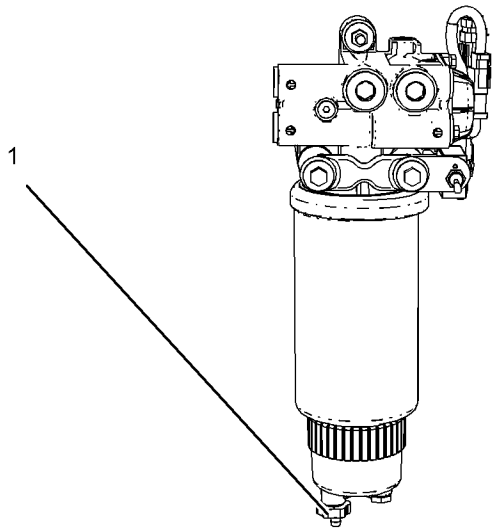

Illustration 48 g03807817

Typical example

1. Ensure that the engine is stopped. Open drain (1). The drain is a self-ventilated drain. Catch the draining water in a suitable container. Dispose of the water properly.
2. Close drain (1).

NOTICE
The water separator is under suction during normal engine operation. Ensure that the drain valve is tightened securely to help prevent air from entering the fuel system.

i07248846

Fuel System Secondary Filter - Replace

WARNING

Fuel leaked or spilled onto hot surfaces or electrical components can cause a fire. To help prevent possible injury, turn the start switch off when changing fuel filters or water separator elements. Clean up fuel spills immediately.

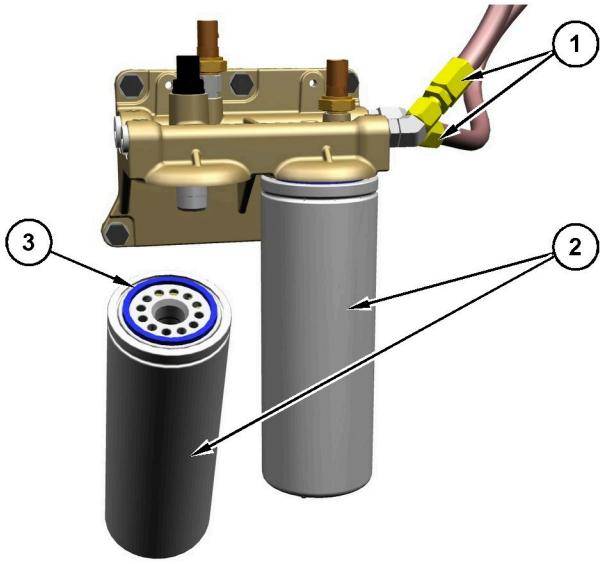

Illustration 49 g06265585

(1) Fuel supply connections
(2) Fuel filters
(3) O-ring seal

NOTICE
Do not allow dirt to enter the fuel system. Thoroughly clean the area around a fuel system component that will be disconnected. Fit a suitable cover over any disconnected fuel system components.

NOTICE
Use a suitable container to catch any fuel that might spill. Clean up any spilled fuel immediately.

1. It may be necessary to relieve residual fuel pressure from the fuel system before removing the fuel filter.

   Loosen one of the fuel supply connections (1) to purge any residual pressure.

NOTICE
Do not loosen fuel lines or fittings at the fuel manifold or ECM. The engine components may be damaged.

2. Remove the used fuel filter.
3. Clean the O-ring sealing surface of the fuel filter base.
4. Apply clean diesel fuel to the new fuel filter O-ring seal.

NOTICE
Do not fill the secondary and tertiary fuel filters with fuel before installing. The fuel would not be filtered and could be contaminated. Contaminated fuel will cause accelerated wear to fuel system parts.

5. Install the new fuel filter. Spin the fuel filter onto the fuel filter base until the O-ring seal contacts the base. Use the rotation index marks on the filters as a guide for tightening correctly. Tighten the filter for an extra 3/4 turn by hand. Do not overtighten the filter.

i02348492

Fuel Tank Water and Sediment - Drain

NOTICE
Care must be taken to ensure that fluids are contained during performance of inspection, maintenance, testing, adjusting and repair of the product. Be prepared to collect the fluid with suitable containers before opening any compartment or disassembling any component containing fluids.

Dispose of all fluids according to local regulations and mandates.

Fuel Tank

Fuel quality is critical to the performance and to the service life of the engine. Water in the fuel can cause excessive wear to the fuel system.

Water can be introduced into the fuel tank when the fuel tank is being filled.

Condensation occurs during the heating and cooling of fuel. The condensation occurs as the fuel passes through the fuel system and the fuel returns to the fuel tank. This causes water to accumulate in fuel tanks. Draining the fuel tank regularly and obtaining fuel from reliable sources can help to eliminate water in the fuel.

Drain the Water and the Sediment

Fuel tanks should contain some provision for draining water and draining sediment from the bottom of the fuel tanks.

Open the drain valve on the bottom of the fuel tank in order to drain the water and the sediment. Close the drain valve.

Check the fuel daily. Allow five minutes after the fuel tank has been filled before draining water and sediment from the fuel tank.

Fill the fuel tank after operating the engine in order to drive out moist air. This will help prevent condensation. Do not fill the tank to the top. The fuel expands as the fuel gets warm. The tank may overflow.

Some fuel tanks use supply pipes that allow water and sediment to settle below the end of the fuel supply pipe. Some fuel tanks use supply lines that take fuel directly from the bottom of the tank. If the engine is equipped with this system, regular maintenance of the fuel system filter is important.

Fuel Storage Tanks

Drain the water and the sediment from the fuel storage tank at the following intervals:

- Weekly
- Service intervals
- Refill of the tank

This will help prevent water or sediment from being pumped from the storage tank into the engine fuel tank.

If a bulk storage tank has been refilled or moved recently, allow adequate time for the sediment to settle before filling the engine fuel tank. Internal baffles in the bulk storage tank will also help trap sediment. Filtering fuel that is pumped from the storage tank helps to ensure the quality of the fuel. When possible, water separators should be used.

i07532149

Fumes Disposal Filter Element - Replace

The filter for the Open Crankcase Ventilation (OCV) system may be located toward the front or toward the rear of the left side of the engine. A filter that has been used may contain a small amount of engine oil.

NOTICE
Care must be taken to ensure that fluids are contained during performance of inspection, maintenance, testing, adjusting, and repair of the machine. Be prepared to collect the fluid with suitable containers before opening any compartment or disassembling any component containing fluids.

Dispose of all fluids according to local regulations and mandates.

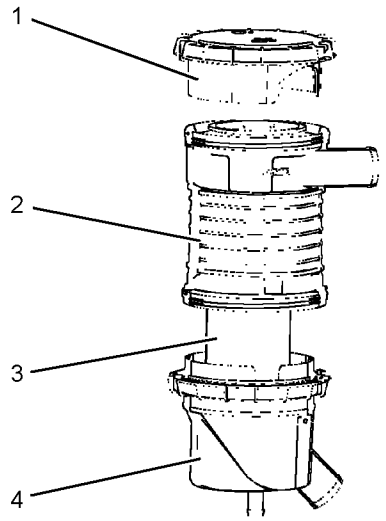

Illustration 50 g02021434

(1) Cap
(2) Housing for the filter element
(3) Filter element
(4) Cup

Remove either the cap or the cup from the housing for the OCV filter. Remove the OCV filter. The filter may not be used again. Dispose of the filter. Place a new OCV filter inside the filter housing. If the cap was removed, replace the cap. If the cup was removed, replace the cup. Tighten hand tight.

Note: Perkins will not be held liable for an engine that does not comply with Environmental Protection Agency (EPA) emissions standards due to modification of the OCV filter or due to the use of a filter that is does not meet Perkins specifications.

i08397616

Grounding Stud - Inspect/ Clean/Tighten

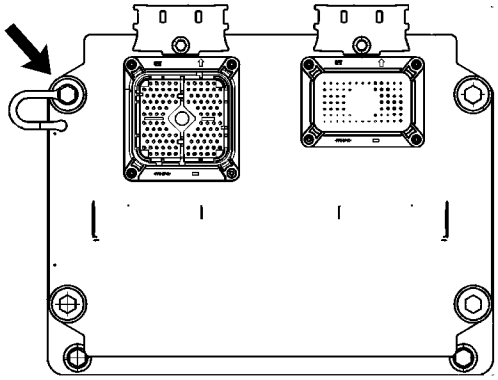

Illustration 51 g01376112

The grounding stud is located on the upper left corner of the engine control module.

Inspect the OEM harness for good connections. Inspect the condition of the OEM harness.

The grounding stud must have a wire ground to the battery. Tighten the grounding stud at every oil change. Ground wires and straps should be combined at engine grounds. All grounds should be tight and free of corrosion.

- Clean the grounding stud and the terminals for the ground strap with a clean cloth.
- If the connections are corroded, clean the connections with a solution of baking soda and water.
- Keep the grounding stud and the strap clean and coated with MPGM grease or petroleum jelly.

i06103230

Hoses and Clamps - Inspect/ Replace

WARNING

Contact with high pressure fuel may cause fluid penetration and burn hazards. High pressure fuel spray may cause a fire hazard. Failure to follow these inspection, maintenance and service instructions may cause personal injury or death.

If you inspect the engine in operation, always use the proper inspection procedure in order to avoid a fluid penetration hazard. Refer to Operation and Maintenance Manual, “General hazard Information”.

Inspect all hoses for leaks that are caused by the following conditions:

- Cracking
- Softness
- Loose clamps

Replace hoses that are cracked or soft. Tighten any loose clamps.

Check for the following conditions:

- End fittings that are damaged or leaking
- Outer covering that is chafed or cut
- Exposed wire that is used for reinforcement
- Outer covering that is ballooning locally
- Flexible part of the hose that is kinked or crushed
- Armoring that is embedded in the outer covering

A constant torque hose clamp can be used in place of any standard hose clamp. Ensure that the constant torque hose clamp is the same size as the standard clamp.

Due to extreme temperature changes, the hose will harden. Hardening of the hoses will cause hose clamps to loosen. This hardening can result in leaks. A constant torque hose clamp will help to prevent loose hose clamps.

Each installation application can be different. The differences depend on the following factors:

- Type of hose
- Type of fitting material
- Anticipated expansion and contraction of the hose
- Anticipated expansion and contraction of the fittings

Replace the Hoses and the Clamps

Refer to the OEM information for further information on removing and replacing fuel hoses (if equipped).

The following text describes a typical method of replacing coolant hoses. Refer to the OEM information for further information on the coolant system and the hoses for the coolant system.

WARNING

Pressurized System: Hot coolant can cause serious burns. To open the cooling system filler cap, stop the engine and wait until the cooling system components are cool. Loosen the cooling system pressure cap slowly in order to relieve the pressure.

1. Stop the engine. Allow the engine to cool.
2. Loosen the cooling system filler cap slowly in order to relieve any pressure. Remove the cooling system filler cap.

Note: Drain the coolant into a suitable, clean container. The coolant can be reused.

3. Drain the coolant from the cooling system to a level that is below the hose that is being replaced.
4. Remove the hose clamps.
5. Disconnect the old hose.
6. Replace the old hose with a new hose.
7. Install the hose clamps with a torque wrench.

Note: For the correct coolant, see this Operation and Maintenance Manual, “Fluid Recommendations”.

8. Refill the cooling system. Refer to the OEM information for further information on refilling the cooling system.
9. Clean the cooling system filler cap. Inspect the cooling system filler caps seals. Replace the cooling system filler cap if the seals are damaged. Install the cooling system filler cap.
10. Start the engine. Inspect the cooling system for leaks.

Fuel System

The fuel system is split into two different sections, high pressure, and low pressure. Ensure that the fuel pressure has been purged before any parts are removed loosened or replaced.

Check that connections and hoses are secure, check for leaks. If parts are to be removed or tightened, refer to the Disassembly and Assembly manual for more information.

i05971077

Overhaul Considerations

For an overhaul solution, contact your Perkins distributor.

i07249538

Power Take-Off Clutch - Check

NOTICE
New power take-offs should have the clutch adjustment checked before being placed into service. The clutch adjustment should be checked again after the first ten hours of operation. New clutch plates have a “wear in” period, and the clutch may require several adjustments until the new plates are “worn in”.

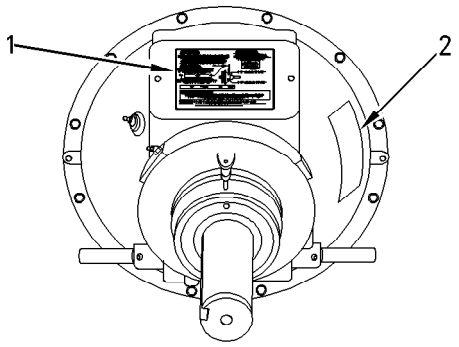

Illustration 52 g00781502

(1) Instruction plate
(2) Serial number plate

Check the clutch adjustment regularly after “wear in”. Heavy-duty applications which have engagements that are frequent and relatively long periods of clutch slippage require more frequent adjustment than light-duty applications. The operating torque should be measured to determine if a clutch adjustment is required.

Refer to the OEM information and instruction plate (1) for instructions on lubrication, adjustment, and other recommendations for service. Perform the maintenance that is specified on the instruction plate.

WARNING

Do not operate the engine with the Instruction Plate cover removed from the clutch. Personal injury may result.

If the clutch is damaged to the point of burst failure, expelled pieces can cause personal injury to anyone in the immediate area. Proper safeguards must be followed to help prevent accidents.

i09670468

Radiator - Clean

Note: Adjust the frequency of cleaning according to the effects of the operating environment.

Inspect the radiator for these items: damaged fins, corrosion, dirt, grease, insects, leaves, oil, and other debris. Clean the radiator, if necessary.

WARNING

Personal injury can result from air pressure.

Personal injury can result without following proper procedure. When using pressure air, wear a protective face shield and protective clothing.

The maximum air pressure for cleaning purposes must be reduced to 205 kPa (30 psi) when the air nozzle is deadheaded.

Pressurized air is the preferred method for removing loose debris. Direct the air in the opposite direction of the air flow. Hold the nozzle approximately 6 mm (0.25 inch) away from the fins. Slowly move the air nozzle in a direction that is parallel with the tubes. This movement will remove debris that is between the tubes.

Pressurized water may also be used for cleaning. The maximum water pressure for cleaning purposes must be less than 275 kPa (40 psi). Use pressurized water to soften mud. Clean the core from the front and the rear.

Use a degreaser and steam for removal of oil and grease. Clean the front and the rear of the core. Wash the core with detergent and hot water. Thoroughly rinse the core with clean water.

After cleaning, start the engine and bring the engine to high idle. This procedure will help in the removal of debris and drying of the core. Stop the engine. Use a light bulb behind the core to inspect the core for cleanliness. Repeat the cleaning, if necessary.

Inspect the fins for damage. Bent fins may be opened with a “comb”. Inspect these items for good condition: welds, mounting brackets, air lines, connections, clamps, and seals. Make repairs, if necessary.

i02568202

Starting Motor - Inspect

Perkins recommends a scheduled inspection of the starting motor. If the starting motor fails, the engine may not start in an emergency situation.

Check the starting motor for proper operation. Check the electrical connections and clean the electrical connections. Refer to the Service Manual for more information on the checking procedure and for specifications or consult your Perkins distributors for assistance.

i06120055

Walk-Around Inspection

Inspect the Engine for Leaks and for Loose Connections

A walk-around inspection should only take a few minutes. When the time is taken to perform these checks, costly repairs and accidents can be avoided.

For maximum engine service life, make a thorough inspection of the engine compartment before starting the engine. Look for items such as oil leaks or coolant leaks, loose bolts, worn belts, loose connections, and trash buildup. Make repairs, as needed:

- The guards must be in the proper place. Repair damaged guards or replace missing guards.
- Wipe all caps and plugs before the engine is serviced in order to reduce the chance of system contamination.

NOTICE
For any type of leak (coolant, lube, or fuel) clean up the fluid. If leaking is observed, find the source and correct the leak. If leaking is suspected, check the fluid levels more often than recommended until the leak is found or fixed, or until the suspicion of a leak is proved to be unwarranted.

NOTICE
Accumulated grease and/or oil on an engine or deck is a fire hazard. Remove this debris with steam cleaning or high pressure water.

- Ensure that the cooling lines are properly clamped and that the cooling lines are tight. Check for leaks. Check the condition of all pipes.
- Inspect the water pumps for coolant leaks.

Note: The water pump seal is lubricated by coolant in the cooling system. It is normal for a small amount of leakage to occur as the engine cools down and the parts contract.

Excessive coolant leakage may indicate the need to replace the water pump seal. For the removal of water pumps and the installation of water pumps and/or seals, refer to the Service Manual for the engine or consult your Perkins distributor .

- Inspect the lubrication system for leaks at the front crankshaft seal, the rear crankshaft seal, the oil pan, the oil filters, and the valve cover.
- Inspect the fuel system for leaks. Look for loose fuel line clamps or for loose fuel line tie-wraps.
- Inspect the piping for the air inlet system and the elbows for cracks and for loose clamps. Ensure that hoses and tubes are not contacting other hoses, tubes, and wiring harnesses.
- Inspect the alternator belt and the accessory drive belts for cracks, breaks, or other damage.

Belts for multiple groove pulleys must be replaced as matched sets. If only one belt is replaced, the belt will carry more load than the belts that are not replaced. The older belts are stretched. The additional load on the new belt could cause the belt to break.

- Drain the water and the sediment from fuel tanks on a daily basis in order to ensure that only clean fuel enters the fuel system.
- Drain the water from the primary fuel filter.
- Inspect the wiring and the wiring harnesses for loose connections and for worn wires or frayed wires.
- Inspect the ground strap for a good connection and for good condition.
- Inspect the ECM to the cylinder head ground strap for a good connection and for good condition.
- Disconnect any battery chargers that are not protected against the current drain of the starting motor. Check the condition and the electrolyte level of the batteries, unless the engine is equipped with a maintenance free battery.
- Check the condition of the gauges. Replace any gauges that are cracked. Replace any gauge that cannot be calibrated.

Warranty Section

Warranty Information

i07538673

Emissions Warranty Information

The certifying engine manufacturer warrants to the ultimate purchaser and each subsequent purchaser that:

1. New non-road diesel engines and stationary diesel engines less than 10 L per cylinder (including Tier 1 and Tier 2 marine engines < 37 kW, but excluding locomotive and other marine engines) operated and serviced in the United States and Canada, including all parts of their emission control systems (“emission-related components”), are:

a. Designed, built, and equipped so as to conform, at the time of sale, with applicable emission standards prescribed by the United States Environmental Protection Agency (EPA) by way of regulation.

b. Free from defects in materials and workmanship in emission-related components that can cause the engine to fail to conform to applicable emission standards for the warranty period.

2. New non-road diesel engines (including Tier 1 and Tier 2 marine propulsion engines < 37 kW and Tier 1 through Tier 4 marine auxiliary engines < 37 kW, but excluding locomotive and other marine engines) operated and serviced in the state of California, including all parts of their emission control systems (“emission-related components”), are:

a. Designed, built, and equipped so as to conform, at the time of sale, to all applicable regulations adopted by the California Air Resources Board (ARB).

b. Free from defects in materials and workmanship which cause the failure of an emission-related component to be identical in all material respects to the component as described in the engine manufacturer's application for certification for the warranty period.

3. New non-road diesel engines installed in construction machines conforming to theSouth Korean regulations for construction machines manufactured after January 1, 2015, and operated and serviced inSouth Korea, including all parts of their emission control systems (“emission related components”), are:

a. Designed, built, and equipped so as to conform, at the time of sale, with applicable emission standards prescribed in the Enforcement Rule of the Clean Air Conservation Act promulgated by South Korea MOE.

b. Free from defects in materials and workmanship in emission-related components that can cause the engine to fail to conform to applicable emission standards for the warranty period.

For a detailed explanation of the Emission Control Warranty, contact your authorized Perkins dealer or your authorized Perkins distributor.

Reference Information Section

Engine Ratings

i07306299

Engine Rating Conditions

All engine ratings are based on“SAE J1349”.

Ratings relate to the standard conditions of “AS1501”, of “ISO3046/1”, of “DIN6271”, and of “BS5514”.

The engine ratings are gross output ratings.

Gross Output Ratings – The total output capability of the engine that is equipped with standard accessories.

Standard accessories include the following components:

- Oil pumps
- Fuel pumps
- Water pumps

Subtract the power that is required to drive auxiliary components from the gross output. This equation will produce the net power that is available for the external load (flywheel).

i07306304

Engine Rating Definitions

In selecting a rating for a specific application, the most important consideration is the time that is spent at full throttle. These rating definitions identify the percent of time at full throttle. The definitions also identify the corresponding times below rated rpm. Refer to this Operation and Maintenance Manual, “Configuration Parameters” for information about the rating for this engine.

Note: The examples of the applications are only for reference. For an exact determination of the appropriate rating, follow the OEM specifications or consult your Perkins dealer.

Table 16

Engine Rating Information				
Perform-ance Rating	Load Factor	Time at Rated Load(1)		Examples of Applications
		Overall	Any One Instance	
A	100%	100%	n/a	Pipe line pumping Ventilation
B	85%	75%	n/a	Irrigation pumps Drilling applications Plant air compressors
C	70%	50%	Less than1 hour	Fire pumps Chippers Rock crushers Portable air compressors
D	50%	10%	Less than 30 minutes	Snowblowers Cranes Water well drills
E	35%	5%	Less than 15 minutes	Standby centrifu-gal pumps Oil well servicing

(1) Both the overall time at rated load and the time the engine is operated in any one instance must be considered.

NOTICE
Operating engines above the rating definitions can result in shorter service life before overhaul.

Customer Service

i07306259

Ordering Replacement Parts

WARNING

When replacement parts are required for this product Perkins recommends using Perkins replacement parts or parts with equivalent specifications including, but not limited to, physical dimensions, type, strength, and material.

Failure to heed this warning can lead to premature failures, product damage, personal injury, or death.

Quality Perkins replacement parts are available from Perkins dealers throughout the world. Perkins dealers parts inventories are up-to-date. The parts stocks include all the parts that are normally needed to protect your Perkins engine investment.

When you order parts, specify the following information:

- Part number
- Part name
- Quantity

If there is a question concerning the part number, provide your dealer with a complete description of the needed item.

When a Perkins engine requires maintenance and/or repair, provide the dealer with all the information that is stamped on the Information Plate. This information is described in this Operation and Maintenance Manual (Product Information Section).

Discuss the problem with the dealer. Inform the dealer about the conditions of the problem and the nature of the problem. Inform the dealer about when the problem occurs, this information will help the dealer in troubleshooting the problem and solving the problem faster.

Reference Materials

i07306250

Reference Material

More literature regarding your product may be purchased from your local Perkins dealer or by visiting www.Perkins.com. Use the product name, sales model, and serial number to obtain the correct information for your product.

i05204672

Maintenance Records

Perkins recommends the retention of accurate maintenance records. Accurate maintenance records can be used for the following purposes:

- Determine operating costs.
- Establish maintenance schedules for other engines that are operated in the same environment.
- Show compliance with the required maintenance practices and maintenance intervals.

Maintenance records can be used for various other business decisions that are related to engine maintenance.

Maintenance records are a key element of a maintenance program that is correctly managed. Accurate maintenance records can help your Perkins dealer to fine-tune the recommended maintenance intervals in order to meet the specific operating situation. This should result in a lower engine operating cost.

Records should be kept for the following items:

Fuel Consumption – A record of fuel consumption is essential in order to determine when the load sensitive components should be inspected or repaired. Fuel consumption also determines overhaul intervals.

Service Hours – A record of service hours is essential to determine when the speed sensitive components should be inspected or repaired.

Documents – These items should be easy to obtain, and these items should be kept in the engine history file. All of the documents should show this information: date, service hours, fuel consumption, unit number and engine serial number. The following types of documents should be kept as proof of maintenance or repair for warranty:

Keep the following types of documents as proof of maintenance for warranty. Also, keep these types of documents as proof of repair for warranty:

- Dealer work orders and itemized bills
- Owners repair costs
- Owners receipts
- Maintenance log

Index

A

Additional Messages 10
After Starting Engine 39
Extended Idle at Cold Ambient Temperature 40
After Stopping Engine 42
Air Compressor - Check (If equipped) 65
Air Shutoff - Test 65
Air Tank Moisture and Sediment - Drain (If Equipped) 65

B

Battery - Recycle 66
Battery - Replace 66
Battery Electrolyte Level - Check 66
Battery or Battery Cable - Disconnect 67
Before Starting Engine 19, 36
Belts - Inspect/Adjust/Replace (Alternator Belt) 67
Inspect 68
Belts - Inspect/Adjust/Replace (Fan Belts) 68
Inspect 68
Burn Prevention 14
Batteries 15
Coolant 14
Diesel Fuel 15
Oils 15

C

Cold Weather Operation 43
Cold Weather Starting 38
Ether Injection System (If Equipped) 38
Configuration Parameters 35
System Configuration Parameters 35
Control Panel (If Equipped) 33
Cooling System Coolant (DEAC) - Change 69
Drain 69
Fill 70
Flush 69
Cooling System Coolant (ELC) - Change 70
Drain 71
Fill 71
Flush 71
Cooling System Coolant Level - Check 72
Cooling System Supplemental Coolant Additive (SCA) - Test/Add 72
Add the SCA, If Necessary 73
Test for SCA Concentration 72
Cooling System Water Temperature Regulator - Replace 73
Crushing Prevention and Cutting Prevention 17
Customer Service 92

D

Diagnostic Lamp 34
Driven Equipment - Check 74

E

Electrical System 20
Grounding Practices 20
Emissions Certification Film 27
Emissions Warranty Information 90
Engaging the Driven Equipment 41
Engine - Clean 74
Engine Air Cleaner Element - Replace 74
Dual Element Air Cleaner 75
Servicing the Air Cleaner Element 74
Engine Air Cleaner Service Indicator - Inspect (If Equipped) 75
Test the Service Indicator 76
Engine Diagnostics 34
Engine Electronics 21
Engine Mounts - Inspect 76
Engine Oil and Filter - Change 78
Drain the Engine Lubricating Oil 79
Fill the Oil Pan 81
Oil and Filter Change Intervals 78
Replace the Oil Filter 80
Engine Oil Level - Check 76
Engine Oil Sample - Obtain 77
Obtain the Sample and the Analysis 77
Engine Operation 41
Engine Operation with Active Diagnostic Codes 34
Engine Operation with Intermittent Diagnostic Codes 35
Engine Rating Conditions 91
Engine Rating Definitions 91
Engine Ratings 91
Engine Starting 19, 36
Engine Stopping 20, 42
Cybersecurity Information 20
Reporting Cybersecurity Vulnerabilities 20
Engine Valve Lash - Check 81

F

Fault Logging 34
Features and Controls 33
Fire Prevention and Explosion Prevention 15
Ether 17
Fire Extinguisher 17
Lines, Tubes, and Hoses 17
Fluid Recommendations 56
ELC Cooling System Maintenance 58
General Coolant Information 56
Fluid Recommendations (Engine Oil Specification) 53
Engine Oil 54
General Lubricant Information 53
Fluid Recommendations (General Fuel Information) 45
Contamination Control Recommendations for Fuels 52
Diesel Fuel Characteristics 47
Diesel Fuel Requirements 45
General Information 45
Renewable and Alternative Fuels 53
Foreword 4
California Proposition 65 Warning 4
Literature Information 4
Maintenance 4
Maintenance Intervals 5
Operation 4
Overhaul 5
Safety 4
Fuel and the Effect from Cold Weather 43
Fuel Conservation Practices 41
Fuel Related Components in Cold Weather ... 43
Fuel Heaters 44
Fuel Tanks 43
Fuel System - Prime 82
Key-on Priming (if equipped) 82
Manual Switch Priming (if equipped) 82
Fuel System Primary Filter (Water Separator) Element - Replace 82
Fuel System Primary Filter/Water Separator - Drain 83
Fuel System Secondary Filter - Replace 84
Fuel Tank Water and Sediment - Drain 85
Drain the Water and the Sediment 85
Fuel Storage Tanks 85
Fuel Tank 85
Fumes Disposal Filter Element - Replace 85

G

General Hazard Information 11
Containing Fluid Spillage 13
Dispose of Waste Properly 14
Fluid Penetration 12
Inhalation 13
Pressurized Air and Water 12
Static Electricity Hazard when Fueling with Ultra-low Sulfur Diesel Fuel 13
Grounding Stud - Inspect/Clean/Tighten 86

H

High Pressure Fuel Lines 17
Hoses and Clamps - Inspect/Replace 86
Fuel System 87
Replace the Hoses and the Clamps 87

I

Important Safety Information 2

L

Lifting and Storage 28

M

Maintenance Interval Schedule 64
Daily 64
Every 2000 Service Hours 64
Every 250 Service Hours 64
Every 2500 Service Hours 64
Every 3000 Service Hours or 3 Years 64
Every 340 500 L (90 000 US gal) of Fuel 64
Every 4000 Service Hours 64
Every 4000 Service Hours or 2 Years 64
Every 500 Service Hours 64
Every 6000 Service Hours or 3 Years 64
Initial 500 Service Hours 64
When Required 64
Maintenance Recommendations 61
Maintenance Records 93
Maintenance Section 45
Manual Stop Procedure 42
Emergency Stopping 42
Stopping the Engine 42
Model View Illustrations 22
Model Views 22
Mounting and Dismounting 17

O

Operation Section 28
Ordering Replacement Parts 92
Overhaul Considerations 87

P

Plate Locations and Film Locations 26
Power Take-Off Clutch - Check 88
Product Identification Information 26
Product Information Section 22
Product Lifting 28
  Engine 29
  Engine and Installed Radiator Only 30
  Radiator Only 30
Product Storage 30
  Engine 30

R

Radiator - Clean 88
Radiator Restrictions 43
Reference Information Section 91
Reference Material 93
Reference Materials 93
Refill Capacities 45
  Coolant Refill Capacities 45
  Lubricant Refill Capacities 45

S

Safety Messages 6
  Hand High Pressure (4) 10
  Hot Fluid Under Pressure (2) 9
  Hot Surface (3) 10
  Universal Warning (1) 9
Safety Section 6
Self-Diagnostics 34
Severe Service Application 62
  Environmental Factors 63
  Incorrect Maintenance Procedures 63
  Incorrect Operating Procedures 63
Starting Motor - Inspect 88
Starting the Engine 36
  Problems with the Wiring Harness 38
  Starting Problems 37
  Starting the Engine 37
Starting with Jump Start Cables (Do Not Use This Procedure in Hazardous Locations that have Explosive Atmospheres) 38
System Pressure Release 61
  Coolant System 61
  Engine Oil 61
  Fuel System 61

T

Table of Contents 3

W

Walk-Around Inspection 89
  Inspect the Engine for Leaks and for Loose Connections 89
Warranty Information 90
Warranty Section 90
Welding on Engines with Electronic Controls 61

Product and Dealer Information

Note: For product identification plate locations, see the section “Product Identification Information” in the Operation and Maintenance Manual.

Delivery Date: _____

Product Information

Model: _____

Product Identification Number: _____

Engine Serial Number: _____

Transmission Serial Number: _____

Generator Serial Number: _____

Attachment Serial Numbers: _____

Attachment Information: _____

Customer Equipment Number: _____

Dealer Equipment Number: _____

Dealer Information

Name: _____ Branch: _____

Address: _____

_____

_____

	Dealer Contact	Phone Number	Hours
Sales:			
Parts:			
Service:			

M0098787
©2026 Perkins Engines Company Limited
All Rights Reserved