SEBU7833-09 (en-us)
September 2026

Operation and Maintenance Manual

1103 and 1104 Industrial Engines

Important Safety Information

Most accidents that involve product operation, maintenance and repair are caused by failure to observe basic safety rules or precautions. An accident can often be avoided by recognizing potentially hazardous situations before an accident occurs. A person must be alert to potential hazards. This person should also have the necessary training, skills and tools to perform these functions correctly.

Incorrect operation, lubrication, maintenance or repair of this product can be dangerous and could result in injury or death.

Do not operate or perform any lubrication, maintenance or repair on this product, until you have read and understood the operation, lubrication, maintenance and repair information.

Safety precautions and warnings are provided in this manual and on the product. If these hazard warnings are not heeded, bodily injury or death could occur to you or to other persons.

The hazards are identified by the “Safety Alert Symbol” and followed by a “Signal Word” such as “DANGER”, “WARNING” or “CAUTION”. The Safety Alert “WARNING” label is shown below.

⚠ WARNING

The meaning of this safety alert symbol is as follows:

Attention! Become Alert! Your Safety is Involved.

The message that appears under the warning explains the hazard and can be either written or pictorially presented.

Operations that may cause product damage are identified by “NOTICE” labels on the product and in this publication.

Perkins cannot anticipate every possible circumstance that might involve a potential hazard. The warnings in this publication and on the product are, therefore, not all inclusive. You must not use this product in any manner different from that considered by this manual without first satisfying yourself that you have considered all safety rules and precautions applicable to the operation of the product in the location of use, including site-specific rules and precautions applicable to the worksite. If a tool, procedure, work method or operating technique that is not specifically recommended by Perkins is used, you must satisfy yourself that it is safe for you and for others. You should also ensure that you are authorized to perform this work, and that the product will not be damaged or become unsafe by the operation, lubrication, maintenance or repair procedures that you intend to use.

The information, specifications, and illustrations in this publication are on the basis of information that was available at the time that the publication was written. The specifications, torques, pressures, measurements, adjustments, illustrations, and other items can change at any time. These changes can affect the service that is given to the product. Obtain the complete and most current information before you start any job. Perkins dealers or Perkins distributors have the most current information available.

⚠ WARNING

When replacement parts are required for this product Perkins recommends using Perkins replacement parts.

Failure to heed this warning can lead to premature failures, product damage, personal injury or death.

In the United States, the maintenance, replacement, or repair of the emission control devices and systems may be performed by any repair establishment or individual of the owner's choosing.

Table of Contents

Foreword 4

Safety Section

Safety Messages 6

General Hazard Information 7

Burn Prevention 11

Fire Prevention and Explosion Prevention 11

Crushing Prevention and Cutting Prevention .. 13

Mounting and Dismounting 13

Before Starting Engine 13

Engine Starting 14

Engine Stopping 14

Electrical System 15

Product Information Section

Model Views 16

Product Identification Information 22

Operation Section

Lifting and Storage 26

Gauges and Indicators 28

Features and Controls 29

Engine Starting 30

Engine Operation 33

Engine Stopping 34

Cold Weather Operation 35

Maintenance Section

Refill Capacities 39

Maintenance Interval Schedule 56

Warranty Section

Warranty Information 91

Index Section

Index 92

Foreword

California Proposition 65 Warning

Diesel engine exhaust and some of its constituents are known to the State of California to cause cancer, birth defects, and other reproductive harm.

WARNING – This product can expose you to chemicals including ethylene glycol, which is known to the State of California to cause birth defects or other reproductive harm. For more information go to:

www.P65Warnings.ca.gov

Do not ingest this chemical. Wash hands after handling to avoid incidental ingestion.

WARNING – This product can expose you to chemicals including lead and lead compounds, which are known to the State of California to cause cancer, birth defects, or other reproductive harm. For more information go to:

www.P65Warnings.ca.gov

Wash hands after handling components that may contain lead.

Literature Information

This manual contains safety, operation instructions, lubrication, and maintenance information. This manual should be stored in or near the engine area in a literature holder or literature storage area. Read, study, and keep the manual with the literature and engine information.

English is the primary language for all Perkins publications. The English used facilitates translation and consistency.

Some photographs or illustrations in this manual show details or attachments that may be different from your engine. Guards and covers may have been removed for illustrative purposes. Continuing improvement and advancement of product design may have caused changes to your engine which are not included in this manual. Whenever a question arises regarding your engine, or this manual, please consult with your Perkins dealer or your Perkins distributor for the latest available information.

Safety

This safety section lists basic safety precautions. In addition, this section identifies hazardous, warning situations. Read and understand the basic precautions listed in the safety section before operating or performing lubrication, maintenance, and repair on this product.

Operation

Operating techniques outlined in this manual are basic. The operating techniques assist with developing the skills and techniques required to operate the engine more efficiently and economically. Skill and techniques develop as the operator gains knowledge of the engine and the capabilities of the engine.

The operation section is a reference for operators. Photographs and illustrations guide the operator through procedures of inspecting, starting, operating, and stopping the engine. This section also includes a discussion of electronic diagnostic information.

Maintenance

The maintenance section is a guide to engine care. The illustrated, step-by-step instructions are grouped by service hours and/or calendar time maintenance intervals. Items in the maintenance schedule are referenced to detailed instructions that follow.

Recommended service should be performed at the appropriate intervals as indicated in the Maintenance Interval Schedule. The actual operating environment of the engine also governs the Maintenance Interval Schedule. Therefore, under severe, dusty, wet, or freezing cold operating conditions, more frequent lubrication, and maintenance than is specified in the Maintenance Interval Schedule may be necessary.

The maintenance schedule items are organized for a preventive maintenance management program. If the preventive maintenance program is followed, a periodic tune-up is not required. The implementation of a preventive maintenance management program should minimize operating costs through cost avoidances resulting from reductions in unscheduled downtime and failures.

Maintenance Intervals

Perform maintenance on items at multiples of the original requirement. Each level and/or individual items in each level should be shifted ahead or back depending upon your specific maintenance practices, operation, and application. Perkins recommends that the maintenance schedules be reproduced and displayed near the engine as a convenient reminder. Perkins also recommends that a maintenance record be maintained as part of the permanent record of the engine.

Your authorized Perkins dealer or your Perkins distributor can assist you in adjusting your maintenance schedule to meet the needs of your operating environment.

Overhaul

Major engine overhaul details are not covered in the Operation and Maintenance Manual except for the interval and the maintenance items in that interval. Major repairs are best left to trained personnel or an authorized Perkins distributor or dealer. Your Perkins dealer or your Perkins distributor offers various options regarding overhaul programs. If you experience a major engine failure, there are also numerous after failure overhaul options available. Consult with your Perkins dealer or your Perkins distributor for information regarding these options.

Safety Section

i11114099

Safety Messages

There may be several specific warning signs on an engine. The exact location of the hazards and the description of the hazards are reviewed in this section. Become familiar with all warning signs.

Ensure that all of the warning signs are legible. Clean the warning signs or replace the warning signs if the words cannot be read or if the pictures are not visible. When the warning signs are cleaned, use a cloth, water, and soap. Do not use solvent, gasoline, or other harsh chemicals to clean the warning signs. Solvents, gasoline, or harsh chemicals could loosen the adhesive that secures the warning signs. The warning signs that are loosened could drop off the engine.

Replace any damaged warning signs or missing warning signs. If a warning sign is attached to a part of the engine that is replaced, install a new warning sign on the replacement part. Perkins dealers or Perkins distributors can provide new warning signs.

Do not work on the engine and do not operate the engine unless the instructions and warnings in the Operation and Maintenance Manual are understood. Correct care is your responsibility. Failure to follow the instructions or failure to heed the warnings could result in injury or in death.

(1) Universal Warning

WARNING

Do not operate or work on this equipment unless you have read and understand the instructions and warnings in the Operation and Maintenance Manuals. Failure to follow the instructions or heed the warnings could result in serious injury or death.

Illustration 1 g01370904

Typical example

The Universal Warning label (1) will be located on the valve mechanism cover. Refer to illustration 2 .

Note: The location of this label will depend on the application of the engine.

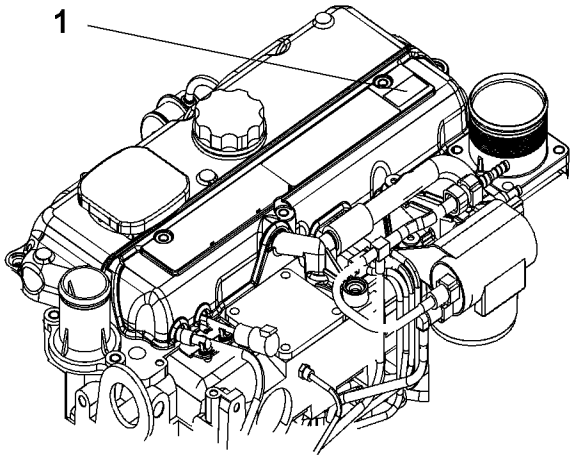

Illustration 2 g03715977

Typical example of a four cylinder engine

(2) Ether

WARNING

Do not use aerosol types of starting aids such as ether. Such use could result in an explosion and personal injury.

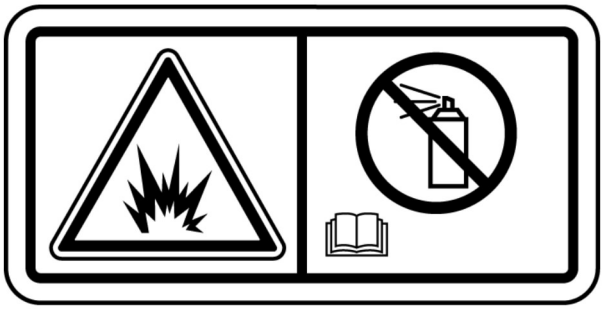

Illustration 3 g01372254

Typical example

The ether warning label (2) is located on the cover of the inlet manifold. Refer to illustration 2 .

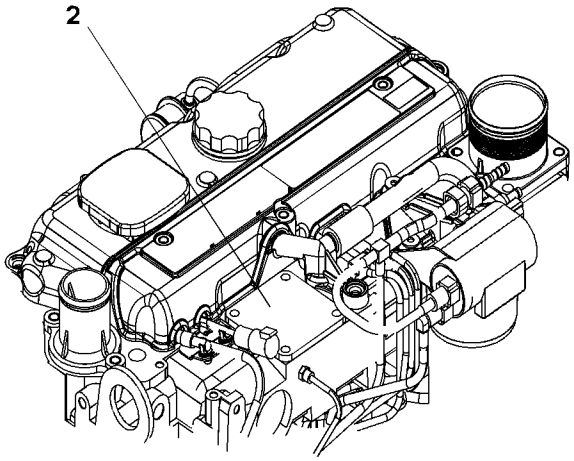

Illustration 4 g03715988

Typical example of a four cylinder engine

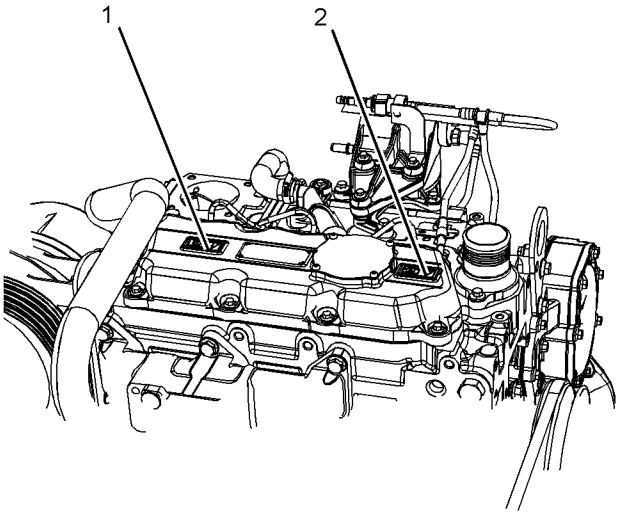

Illustration 5 g03715821

Typical example of a three cylinder engine

(1) Universal warning label
(2) Ether warning label

The universal warning label (1) is located at the rear of the valve mechanism cover on the three cylinder engine. The ether warning label (2) is located at the front of the valve mechanism cover on the three cylinder engine.

i08312758

General Hazard Information

Illustration 6 g00104545

Attach a “Do Not Operate” warning tag or a similar warning tag to the start switch or to the controls before you service the equipment or before you repair the equipment.

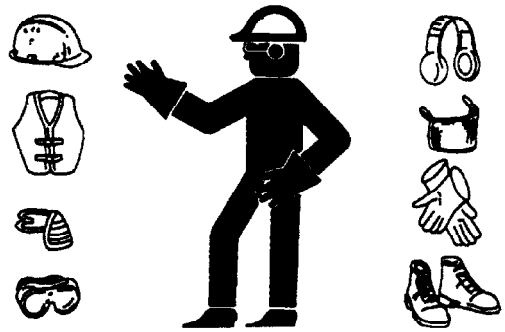

Illustration 7 g00702020

Wear a hard hat, protective glasses, and other protective equipment, as required.

Do not wear loose clothing or jewelry that can snag on controls or on other parts of the engine.

Make sure that all protective guards and all covers are secured in place on the engine.

Keep the engine free from foreign material. Remove debris, oil, tools, and other items from the deck, from walkways, and from steps.

Never put maintenance fluids into glass containers. Drain all liquids into a suitable container.

Obey all local regulations for the disposal of liquids.

Use all cleaning solutions with care.

Report all necessary repairs.

Do not allow unauthorized personnel on the equipment.

Disconnect the batteries when maintenance is performed or when the electrical system is serviced. Disconnect the battery ground leads. Tape the leads to help prevent sparks. If equipped, allow the diesel exhaust fluid to be purged before disconnecting the battery.

Perform maintenance on the engine with the equipment in the servicing position. Refer to the OEM information for the procedure for placing the equipment in the servicing position.

Do not attempt any repairs that are not understood. Use the proper tools. Replace any equipment that is damaged or repair the equipment.

For initial start-up of a new engine or for starting an engine that has been serviced, make provisions to stop the engine if an overspeed occurs. The stopping of the engine may be accomplished by shutting off the fuel supply and/or the air supply to the engine. Ensure that only the fuel supply line is shut off. Ensure that the fuel return line is open.

Start the engine from the operators station (cab). Never short across the starting motor terminals or the batteries. This action could bypass the engine neutral start system and/or the electrical system could be damaged.

Engine exhaust contains products of combustion which may be harmful to your health. Always start the engine and operate the engine in a ventilated area. If the engine is in an enclosed area, vent the engine exhaust to the outside.

Use caution when cover plates are removed. Gradually loosen, but do not remove the last two bolts or nuts that are located at opposite ends of the cover plate or the device. Before removing the last two bolts or nuts, pry the cover loose to relieve any spring pressure or other pressure.

Pressure Air and Water

Pressurized air and/or water can cause debris and/or hot water to be blown out. This action could result in personal injury.

The direct application of pressurized air or pressurized water to the body could result in personal injury.

When pressurized air and/or water is used for cleaning, wear protective clothing, protective shoes, and eye protection. Eye protection includes goggles or a protective face shield.

The maximum air pressure for cleaning purposes must be below 205 kPa (30 psi). The maximum water pressure for cleaning purposes must be below 275 kPa (40 psi).

Fluid Penetration

Pressure can be trapped in the hydraulic circuit long after the engine has been stopped. The pressure can cause hydraulic fluid or items such as pipe plugs to escape rapidly if the pressure is not relieved correctly.

Do not remove any hydraulic components or parts until pressure has been relieved or personal injury may occur. Do not disassemble any hydraulic components or parts until pressure has been relieved or personal injury may occur. Refer to the OEM information for any procedures that are required to relieve the hydraulic pressure.

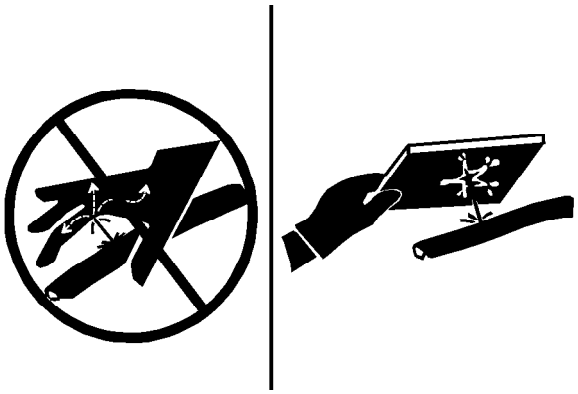

Illustration 8 g00687600

Always use a board or cardboard when you check for a leak. Leaking fluid that is under pressure can penetrate body tissue. Fluid penetration can cause serious injury and possible death. A pin hole leak can cause severe injury. If fluid is injected into your skin, you must get treatment immediately. Seek treatment from a doctor that is familiar with this type of injury.

Containing Fluid Spillage

Care must be taken to ensure that fluids are contained during performance of inspection, maintenance, testing, adjusting, and repair of the engine. Make provision to collect the fluid with a suitable container before any compartment is opened or before any component is disassembled.

- Only use the tools that are suitable for collecting fluids and equipment that is suitable for collecting fluids.
- Only use the tools that are suitable for containing fluids and equipment that is suitable for containing fluids.

Obey all local regulations for the disposal of liquids.

Static Electricity Hazard when Fueling with Ultra-low Sulfur Diesel Fuel

The removal of sulfur and other compounds in ultra-low sulfur diesel fuel (ULSD fuel) decreases the conductivity of ULSD and increases the ability of ULSD to store static charge. Refineries may have treated the fuel with a static dissipating additive. Many factors can reduce the effectiveness of the additive over time. Static charges can build up in ULSD fuel while the fuel is flowing through fuel delivery systems. Static electricity discharge when combustible vapors are present could result in a fire or explosion. Ensure that the entire system used to refuel your machine (fuel supply tank, transfer pump, transfer hose, nozzle, and others) is properly grounded and bonded. Consult with your fuel or fuel system supplier to ensure that the delivery system complies with fueling standards for proper grounding and bonding.

⚠ WARNING

Avoid static electricity risk when fueling. Ultra-low sulfur diesel fuel (ULSD fuel) poses a greater static ignition hazard than earlier diesel formulations with a higher sulfur contents. Avoid death or serious injury from fire or explosion. Consult with your fuel or fuel system supplier to ensure the delivery system is in compliance with fueling standards for proper grounding and bonding practices.

Inhalation

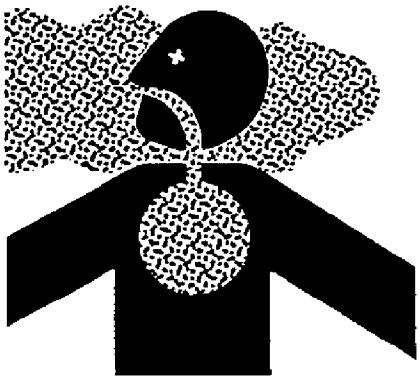

Illustration 9 g00702022

Exhaust

Use caution. Exhaust fumes can be hazardous to health. If you operate the equipment in an enclosed area, adequate ventilation is necessary.

Hexavalent Chromium

Perkins equipment and replacement parts comply with applicable regulations and requirements where originally sold. Perkins recommends the use of only genuine Perkins replacement parts.

Hexavalent chromium has occasionally been detected on exhaust and heat shield systems on Perkins engines. Although laboratory testing is the only accurate way to know if hexavalent chromium is, in fact, present, the presence of a yellow deposit in areas of high heat (for example, exhaust system components or exhaust insulation) may be an indication of the presence of hexavalent chromium.

Use caution if you suspect the presence of hexavalent chromium. Avoid skin contact when handling items that you suspect may contain hexavalent chromium, and avoid inhalation of any dust in the suspect area. Inhalation of, or skin contact with, hexavalent chromium dust may be hazardous to your health.

If such yellow deposits are found on the engine, engine component parts, or associated equipment or packages, Perkins recommends following local health and safety regulations and guidelines, utilizing good hygiene, and adhering to safe work practices when handling the equipment or parts. Perkins also recommends the following:

- Wear appropriate Personal Protective Equipment (PPE)
- Wash your hands and face with soap and water prior to eating, drinking, or smoking, and also during rest room breaks, to prevent ingestion of any yellow powder
- Never use compressed air for cleaning areas suspected of containing hexavalent chromium
- Avoid brushing, grinding, or cutting materials suspected of containing hexavalent chromium
- Obey environmental regulations for the disposal of all materials that may contain or have come into contact with hexavalent chromium
- Stay away from areas that might have hexavalent chromium particles in the air.

Asbestos Information

Perkins equipment and replacement parts that are shipped from Perkins engine company limited are asbestos free. Perkins recommends the use of only genuine Perkins replacement parts. Use the following guidelines when you handle any replacement parts that contain asbestos or when you handle asbestos debris.

Use caution. Avoid inhaling dust that might be generated when you handle components that contain asbestos fibers. Inhaling this dust can be hazardous to your health. The components that may contain asbestos fibers are brake pads, brake bands, lining material, clutch plates, and some gaskets. The asbestos that is used in these components is usually bound in a resin or sealed in some way. Normal handling is not hazardous unless airborne dust that contains asbestos is generated.

If dust that may contain asbestos is present, there are several guidelines that should be followed:

- Never use compressed air for cleaning.
- Avoid brushing materials that contain asbestos.
- Avoid grinding materials that contain asbestos.
- Use a wet method to clean up asbestos materials.
- A vacuum cleaner that is equipped with a high efficiency particulate air filter (HEPA) can also be used.
- Use exhaust ventilation on permanent machining jobs.
- Wear an approved respirator if there is no other way to control the dust.
- Comply with applicable rules and regulations for the work place. In the United States, use Occupational Safety and Health Administration (OSHA) requirements. These OSHA requirements can be found in “29 CFR 1910.1001”.
- Obey environmental regulations for the disposal of asbestos.
- Stay away from areas that might have asbestos particles in the air.

Dispose of Waste Properly

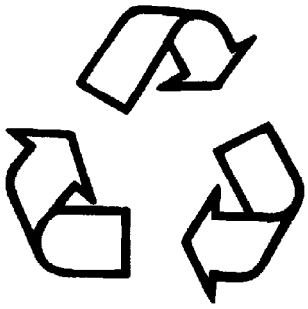

Illustration 10 g00706404

Improperly disposing of waste can threaten the environment. Potentially harmful fluids should be disposed of in accordance with local regulations.

Always use leakproof containers when you drain fluids. Do not pour waste onto the ground, down a drain, or into any source of water.

i07188265

Burn Prevention

Do not touch any part of an operating engine. Operating engines exhaust gases could burn, do not come in contact with hot gases. Allow the engine to cool before any maintenance is performed on the engine. Relieve all pressure in the air system, in the hydraulic system, in the lubrication system, in the fuel system, or in the cooling system before any lines, fittings, or related items are disconnected.

Coolant

When the engine is at operating temperature, the engine coolant is hot. The coolant is also under pressure. The radiator and all lines to the heaters or to the engine contain hot coolant.

Any contact with hot coolant or with steam can cause severe burns. Allow cooling system components to cool before the cooling system is drained.

Check that the coolant level after the engine has stopped and the engine has been allowed to cool.

Ensure that the filler cap is cool before removing the filler cap. The filler cap must be cool enough to touch with a bare hand. Remove the filler cap slowly to relieve pressure.

Cooling system conditioner contains alkali. Alkali can cause personal injury. Do not allow alkali to contact the skin, the eyes, or the mouth.

Oils

Skin may be irritated following repeated or prolonged exposure to mineral and synthetic base oils. Refer to your suppliers Material Safety Data Sheets for detailed information. Hot oil and lubricating components can cause personal injury. Do not allow hot oil to contact the skin. Appropriate personal protective equipment should be used.

Diesel Fuel

Diesel may be irritating to the eyes, respiratory system, and skin. Prolonged exposure to diesel may cause various skin conditions. Appropriate personal protective equipment should be used. Refer to supplier Material safety Data sheets for detailed information.

Batteries

Electrolyte is an acid. Electrolyte can cause personal injury. Do not allow electrolyte to contact the skin or the eyes. Always wear protective glasses for servicing batteries. Wash hands after touching the batteries and connectors. Use of gloves is recommended.

i07188311

Fire Prevention and Explosion Prevention

Illustration 11 g00704000

All fuels, most lubricants, and some coolant mixtures are flammable.

Flammable fluids that are leaking or spilled onto hot surfaces or onto electrical components can cause a fire. Fire may cause personal injury and property damage.

A flash fire may result if the covers for the engine crankcase are removed within 15 minutes after an emergency shutdown.

Determine whether the engine will be operated in an environment that allows combustible gases to be drawn into the air inlet system. These gases could cause the engine to overspeed. Personal injury, property damage, or engine damage could result.

If the application involves the presence of combustible gases, consult your Perkins dealer and/or your Perkins distributor for additional information about suitable protection devices.

Remove all flammable combustible materials or conductive materials such as fuel, oil, and debris from the engine. Do not allow any flammable combustible materials or conductive materials to accumulate on the engine.

Store fuels and lubricants in correctly marked containers away from unauthorized persons. Store oily rags and any flammable materials in protective containers. Do not smoke in areas that are used for storing flammable materials.

Do not expose the engine to any flame.

Exhaust shields (if equipped) protect hot exhaust components from oil or fuel spray in case of a line, a tube, or a seal failure. Exhaust shields must be installed correctly.

Do not weld on lines or tanks that contain flammable fluids. Do not flame-cut lines or tanks that contain flammable fluid. Clean any such lines or tanks thoroughly with a nonflammable solvent prior to welding or flame cutting.

Wiring must be kept in good condition. Ensure that all electrical wires are correctly installed and securely attached. Check all electrical wires daily. Repair any wires that are loose or frayed before you operate the engine. Clean all electrical connections and tighten all electrical connections.

Eliminate all wiring that is unattached or unnecessary. Do not use any wires or cables that are smaller than the recommended gauge. Do not bypass any fuses and/or circuit breakers.

Arcing or sparking could cause a fire. Secure connections, recommended wiring, and correctly maintained battery cables will help to prevent arcing or sparking.

Inspect all lines and hoses for wear or for deterioration. The hoses must be correctly routed. The lines and hoses must have adequate support and secure clamps. Tighten all connections to the recommended torque. Leaks can cause fires.

Oil filters and fuel filters must be correctly installed. The filter housings must be tightened to the correct torque.

Illustration 12 g00704059

Use caution when you are refueling an engine. Do not smoke while you are refueling an engine. Do not refuel an engine near open flames or sparks. Always stop the engine before refueling.

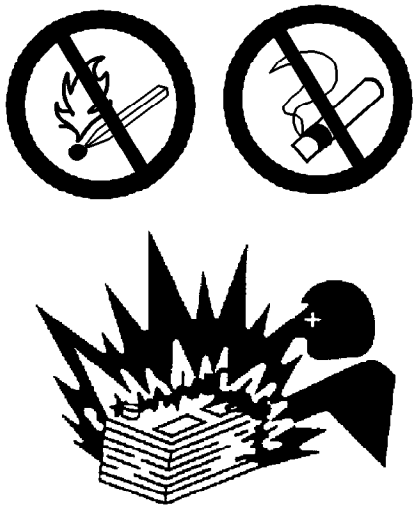

Illustration 13 g00704135

Gases from a battery can explode. Keep any open flames or sparks away from the top of a battery. Do not smoke in battery charging areas.

Never check the battery charge by placing a metal object across the terminal posts. Use a voltmeter or a hydrometer.

Incorrect jumper cable connections can cause an explosion that can result in injury. Refer to the Operation Section of this manual for specific instructions.

Do not charge a frozen battery. This action may cause an explosion.

The batteries must be kept clean. The covers (if equipped) must be kept on the cells. Use the recommended cables, connections, and battery box covers when the engine is operated.

Fire Extinguisher

Make sure that a fire extinguisher is available. Be familiar with the operation of the fire extinguisher. Inspect the fire extinguisher and service the fire extinguisher regularly. Obey the recommendations on the instruction plate.

Ether

Ether is flammable and poisonous.

Do not smoke while you are replacing an ether cylinder or while you are using an ether spray.

Do not store ether cylinders in living areas or in the engine compartment. Do not store ether cylinders in direct sunlight or in temperatures above 49° C (120° F). Keep ether cylinders away from open flames or sparks.

Lines, Tubes, and Hoses

Do not bend high-pressure lines. Do not strike high-pressure lines. Do not install any lines that are bent or damaged. Do not clip any other items to the high-pressure lines.

Repair any lines that are loose or damaged. Leaks can cause fires. Consult your Perkins dealer or your Perkins distributor for repair or for replacement parts.

Check lines, tubes, and hoses carefully. Do not use your bare hand to check for leaks. Use a board or cardboard to check for leaks. Tighten all connections to the recommended torque.

Replace the parts if any of the following conditions are present:

- End fittings are damaged or leaking.
- Outer coverings are chafed or cut.
- Wires are exposed.
- Outer coverings are ballooning.
- Flexible parts of the hoses are kinked.
- Outer covers have embedded armoring.
- End fittings are displaced.

Make sure that all clamps, guards, and heat shields are installed correctly. During engine operation, correct installation will help to prevent vibration, rubbing against other parts, and excessive heat.

i02143194

Crushing Prevention and Cutting Prevention

Support the component correctly when work beneath the component is performed.

Unless other maintenance instructions are provided, never attempt adjustments while the engine is running.

Stay clear of all rotating parts and of all moving parts. Leave the guards in place until maintenance is performed. After the maintenance is performed, reinstall the guards.

Keep objects away from moving fan blades. The fan blades will throw objects or cut objects.

When objects are struck, wear protective glasses in order to avoid injury to the eyes.

Chips or other debris may fly off objects when objects are struck. Before objects are struck, ensure that no one will be injured by flying debris.

i05875651

Mounting and Dismounting

Do not climb on the engine. The engine has not been designed with mounting or dismounting locations.

Refer to the OEM for the location of foot and hand holds for your specific application.

i05874054

Before Starting Engine

NOTICE
For initial start-up of a new or rebuilt engine, and for start-up of an engine that has been serviced, make provision to shut the engine off should an overspeed occur. This may be accomplished by shutting off the air and/or fuel supply to the engine.

WARNING

Engine exhaust contains products of combustion which may be harmful to your health. Always start and operate the engine in a well ventilated area and, if in an enclosed area, vent the exhaust to the outside.

Inspect the engine for potential hazards.

Do not start the engine or move any of the controls if there is a “DO NOT OPERATE” warning tag or similar warning tag attached to the start switch or to the controls.

Before starting the engine, ensure that no one is on, underneath, or close to the engine. Ensure that the area is free of personnel.

If equipped, ensure that the lighting system for the engine is suitable for the conditions. Ensure that all lights work properly, if equipped.

All protective guards and all protective covers must be installed if the engine must be started in order to perform service procedures. To help prevent an accident that is caused by parts in rotation, work around the parts carefully.

Do not bypass the automatic shutoff circuits. Do not disable the automatic shutoff circuits. The circuits are provided in order to help prevent personal injury. The circuits are also provided in order to help prevent engine damage.

See the Service Manual for repairs and for adjustments.

i08238394

Engine Starting

WARNING

Do not use aerosol types of starting aids such as ether. Such use could result in an explosion and personal injury.

If a warning tag is attached to the engine start switch or to the controls, DO NOT start the engine or move the controls. Consult with the person that attached the warning tag before the engine is started.

All protective guards and all protective covers must be installed if the engine must be started to perform service procedures. To help prevent an accident that is caused by parts in rotation, work around the parts carefully.

Start the engine from the operator's compartment or from the engine start switch.

Always start the engine according to the procedure that is described in the Operation and Maintenance Manual, “Engine Starting” topic in the Operation Section. Knowing the correct procedure will help to prevent major damage to the engine components. Knowing the procedure will also help to prevent personal injury.

To ensure that the jacket water heater (if equipped) and/or the lube oil heater (if equipped) is working correctly, check the water temperature gauge and the oil temperature gauge during the heater operation.

WARNING

Engine exhaust contains products of combustion which may be harmful to your health. Always start and operate the engine in a well ventilated area and, if in an enclosed area, vent the exhaust to the outside.

Note: The engine is equipped with an automatic device for cold starting for normal conditions of operation. If the engine will be operated in very cold conditions, then an extra cold starting aid may be required. Normally, the engine will be equipped with the correct type of starting aid for your region of operation.

The engines are equipped with a glow plug starting aid in each individual cylinder that heats the intake air to improve starting.

i01928905

Engine Stopping

Stop the engine according to the procedure in the Operation and Maintenance Manual, “Engine Stopping (Operation Section)” in order to avoid overheating of the engine and accelerated wear of the engine components.

Use the Emergency Stop Button (if equipped) ONLY in an emergency situation. Do not use the Emergency Stop Button for normal engine stopping. After an emergency stop, DO NOT start the engine until the problem that caused the emergency stop has been corrected.

Stop the engine if an overspeed condition occurs during the initial start-up of a new engine or an engine that has been overhauled. This may be accomplished by shutting off the fuel supply to the engine and/or shutting off the air supply to the engine.

i02176668

Electrical System

Never disconnect any charging unit circuit or battery circuit cable from the battery when the charging unit is operating. A spark can cause the combustible gases that are produced by some batteries to ignite.

To help prevent sparks from igniting combustible gases that are produced by some batteries, the negative “−” jump start cable should be connected last from the external power source to the negative “−” terminal of the starting motor. If the starting motor is not equipped with a negative “−” terminal, connect the jump start cable to the engine block.

Check the electrical wires daily for wires that are loose or frayed. Tighten all loose electrical wires before the engine is started. Repair all frayed electrical wires before the engine is started. See the Operation and Maintenance Manual for specific starting instructions.

Grounding Practices

Correct grounding for the engine electrical system is necessary for optimum engine performance and reliability. Incorrect grounding will result in uncontrolled electrical circuit paths and in unreliable electrical circuit paths.

Uncontrolled electrical circuit paths can result in damage to main bearings, to crankshaft bearing journal surfaces, and to aluminum components.

Engines that are installed without engine-to-frame ground straps can be damaged by electrical discharge.

To ensure that the engine and the engine electrical systems function correctly, an engine-to-frame ground strap with a direct path to the battery must be used. This path may be provided by way of a direct engine ground to the frame.

All grounds should be tight and free of corrosion. The engine alternator must be grounded to the negative “-” battery terminal with a wire that is adequate to handle the full charging current of the alternator.

Product Information Section

Model Views

i10517601

Model View Illustrations

The following model views show typical features of the engine. Due to individual applications, your engine may appear different from the illustrations.

1104 Engine Model Views

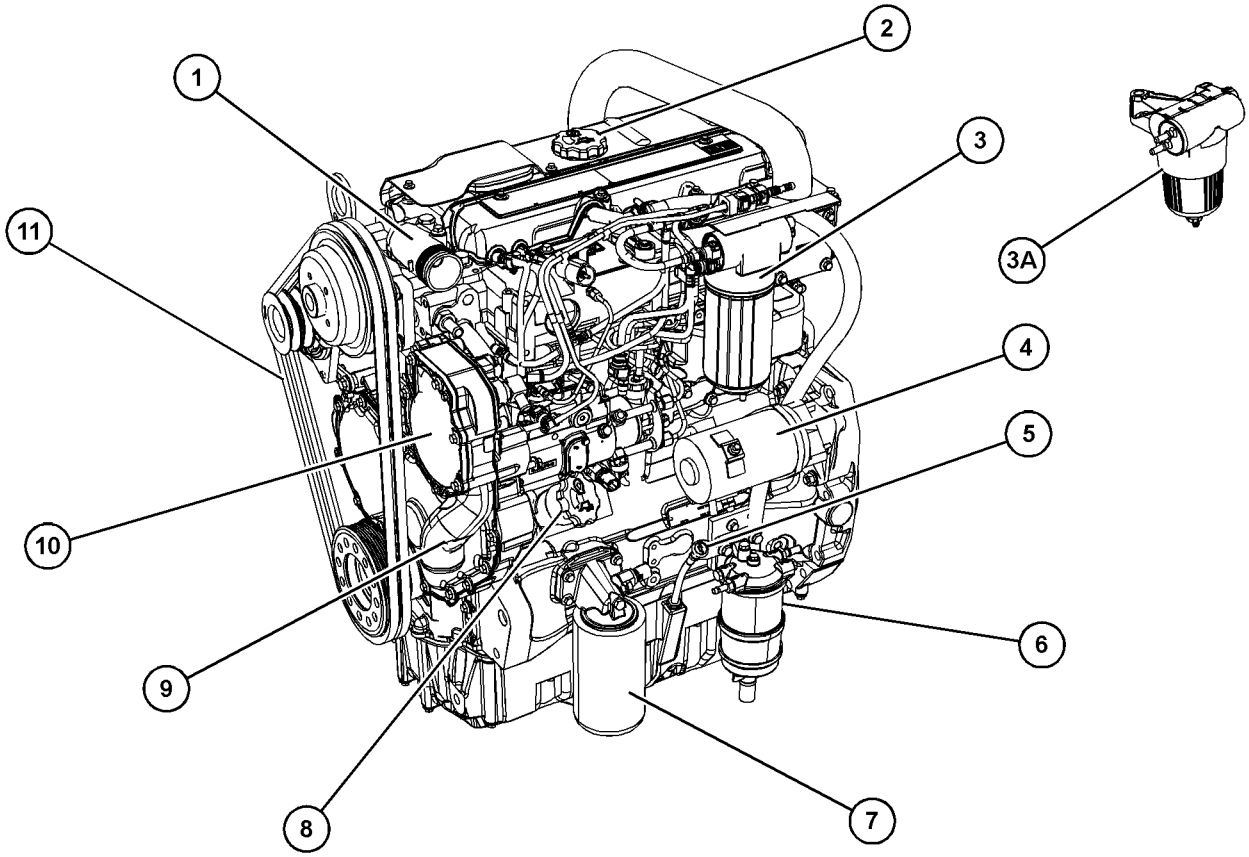

Illustration 14 g07896787

Typical example

(1) Coolant outlet
(2) Oil filler
(3) Secondary fuel filter (Type 1)
(3A) Secondary fuel filter (Type 2)
(4) Starting motor
(5) Oil gauge (Dipstick)
(6) Primary fuel filter
(7) Oil filter
(8) Oil filler (Lower position if installed)
(9) Coolant intake
(10) Water pump
(11) Belts

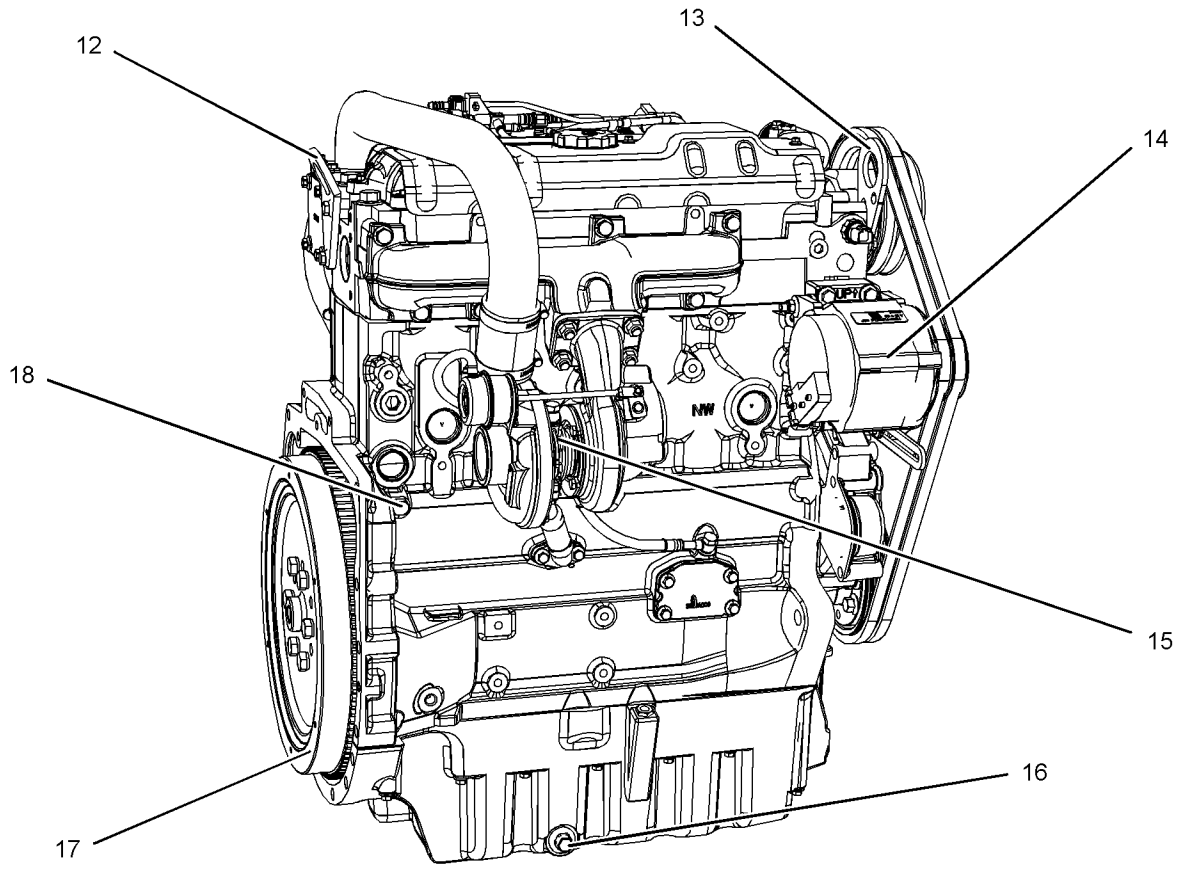

Illustration 15 g03706446

Typical example

(12) Rear lifting eye
(13) Front lifting eye
(14) Alternator
(15) Turbocharger
(16) Oil drain plug
(17) Flywheel
(18) Coolant drain

1103 Engine Model Views

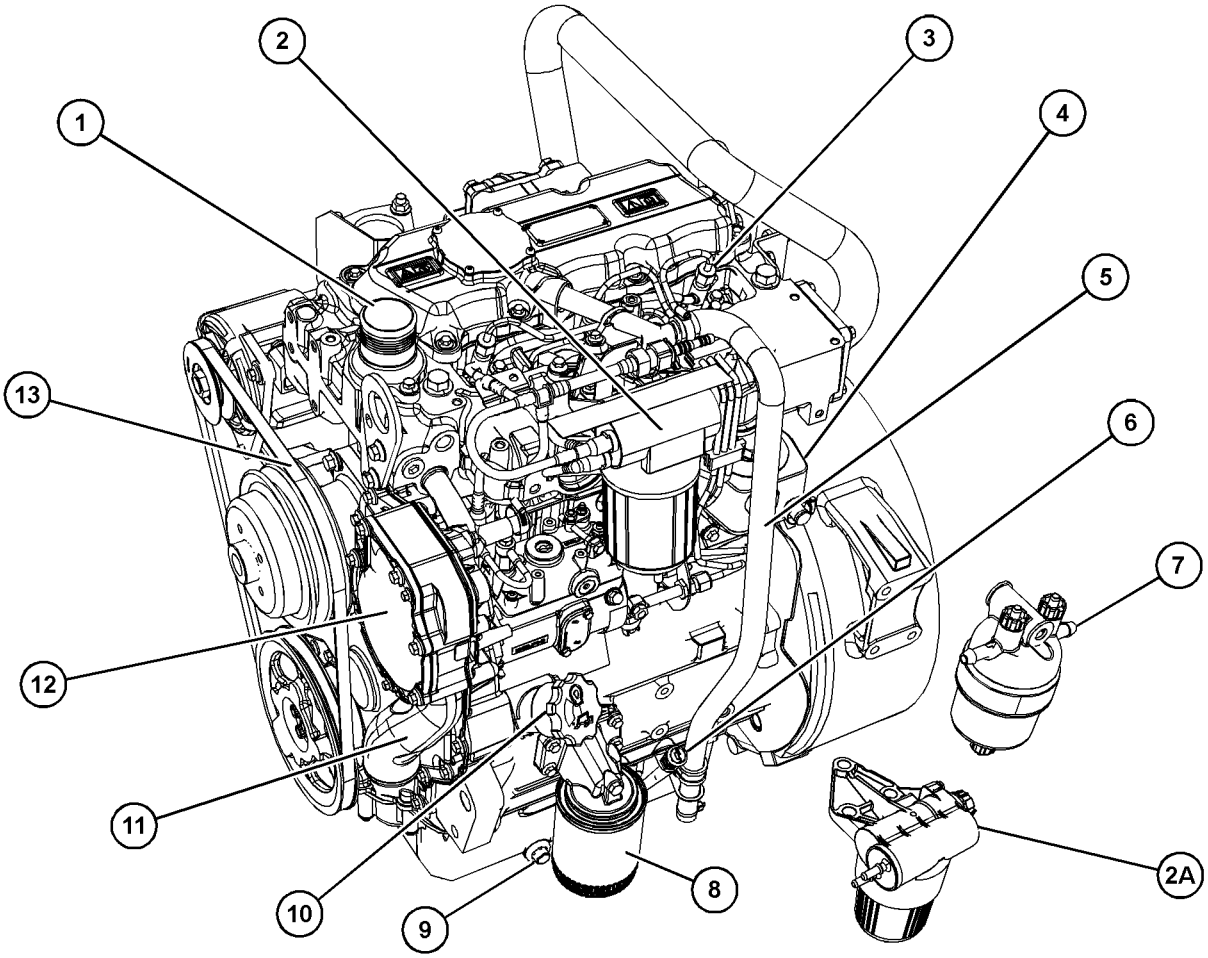

Illustration 16 g07896802

Typical example

(1) Coolant out let
(2) Secondary fuel filter (Type 1)
(2A) Secondary fuel filter (Type 2)
(3) Fuel injector
(4) Oil cooler
(5) Open breather
(6) Oil gauge (Dipstick)
(7) Primary fuel filter
(8) Oil filter
(9) Oil drain plug
(10) Oil filler
(11) Coolant intake
(12) Water pump
(13) Belt

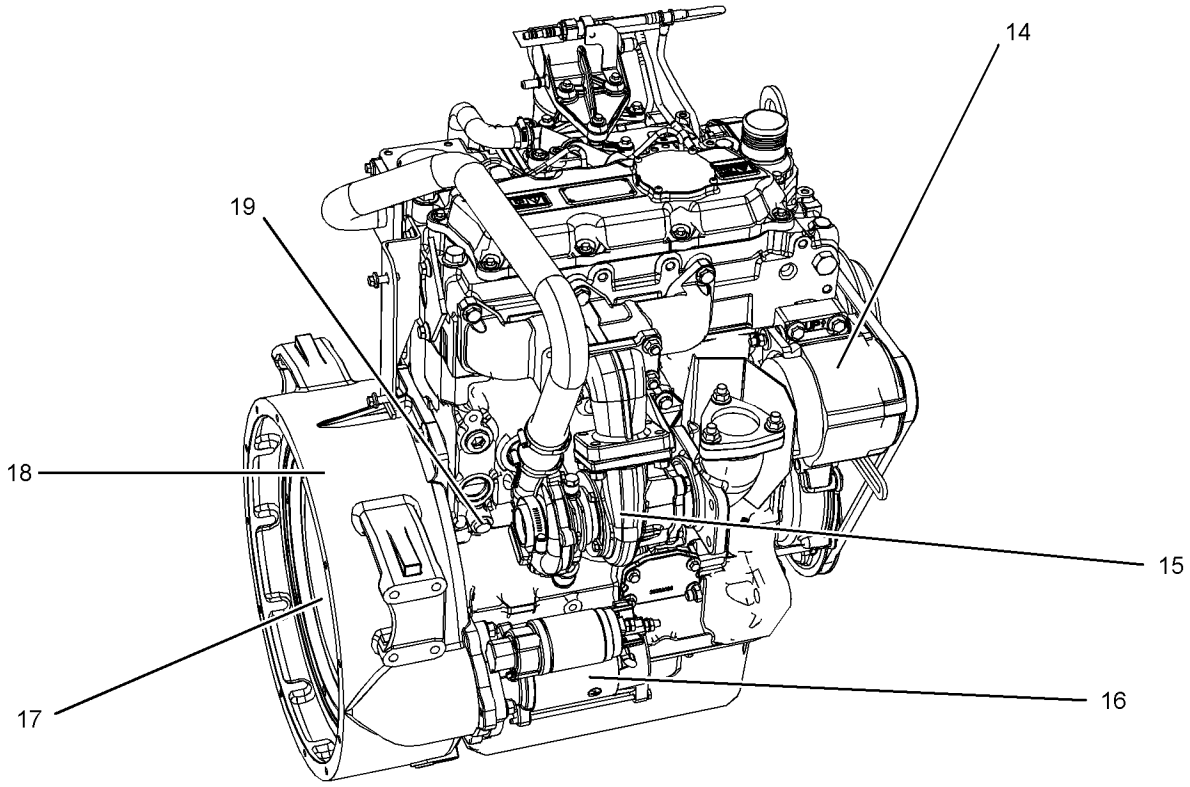

Illustration 17 g03705848

Typical example

(14) Alternator
(15) Turbocharger
(16) Starting motor
(17) Flywheel
(18) Flywheel housing
(19) Coolant drain plug

i05899588

Engine Description

- Turbocharged aftercooled
- Turbocharged
- Naturally aspirated

Engine Specifications

Note: The front end of the engine is opposite the flywheel end of the engine. The left and the right sides of the engine are determined from the flywheel end. The number 1 cylinder is the front cylinder.

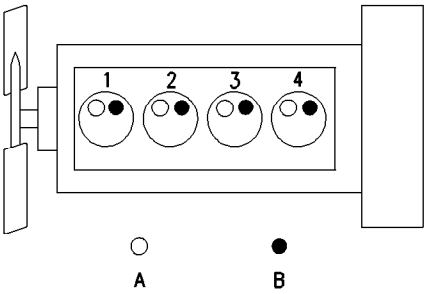

Illustration 18 g00984281

A typical example of the layout of the valves

(A) Inlet valves
(B) Exhaust valves

Table 1

1104 Industrial Engine Specifications	
Number of Cylinders	4 In-Line
Bore	105 mm (4.134 inch)
Stroke	127 mm (5.0 inch)
Aspiration	Turbocharged aftercooled Turbocharged Naturally aspirated
Compression Ratio	NA 19.25:1 NA T 18.23:1 T, TA
Displacement	4.4 L (268 in ^{3})
Firing Order	1 3 4 2
Rotation (flywheel end)	Counterclockwise
Valve Lash Setting (Inlet)	0.20 mm (0.008 inch)
Valve Lash Setting (Exhaust)	0.45 mm (0.018 inch)

Table 2

1103 Industrial Engine Specifications	
Number of Cylinders	3 In-Line
Bore	105 mm (4.134 inch)
Stroke	127 mm (5.0 inch)
Aspiration	Turbocharged Naturally aspirated
Compression Ratio	NA 19.25:1 T 18.25:1
Displacement	3.3 L (201 in^3)
Firing Order	1 2 3
Rotation (flywheel end)	Counterclockwise
Valve Lash Setting (Inlet)	0.20 mm (0.008 inch)
Valve Lash Setting (Exhaust)	0.45 mm (0.018 inch)

Table 3

1104Constance Speed Specifications	
Number of Cylinders	4 In-Line
Bore	105 mm (4.134 inch)
Stroke	127 mm (5.0 inch)
Aspiration	Turbocharged aftercooled Turbocharged Naturally aspirated
Compression Ratios	NA 19.25:1 T 17.25:1, T 18.23:1, TA 18.23:1

(continued)

(Table 3, contd)

Displacement	4.4 L (268 in ^{3})
Firing Order	1 3 4 2
Rotation (flywheel end)	Counterclockwise
Valve Lash Setting (Inlet)	0.20 mm (0.008 inch)
Valve Lash Setting (Exhaust)	0.45 mm (0.018 inch)

Table 4

1103 Constance Speed Specifications	
Number of Cylinders	3 In-Line
Bore	105 mm (4.134 inch)
Stroke	127 mm (5.0 inch)
Aspiration	Turbocharged Naturally aspirated
Compression Ratio	NA 19.25:1 T 17.25:1
Displacement	3.3 L (201 in^3)
Firing Order	1 2 3
Rotation (flywheel end)	Counterclockwise
Valve Lash Setting (Inlet)	0.20 mm (0.008 inch)
Valve Lash Setting (Exhaust)	0.45 mm (0.018 inch)

Engine Cooling and Lubrication

The cooling system consists of the following components:

- Gear-driven centrifugal water pump
- Water temperature regulator which regulates the engine coolant temperature
- Gear-driven oil pump (gear type)
- Oil cooler

The engine lubricating oil is supplied by a gear type pump. The engine lubricating oil is cooled and the engine lubricating oil is filtered. Bypass valves provide unrestricted flow of lubrication oil to the engine parts when oil viscosity is high. Bypass valves can also provide unrestricted flow of lubrication oil to the engine parts if the oil cooler should become plugged or if the oil filter element should become plugged.

Engine efficiency, efficiency of emission controls, and engine performance depend on adherence to proper operation and maintenance recommendations. Engine performance and efficiency also depend on the use of recommended fuels, lubrication oils, and coolants. Refer to the Operation and Maintenance Manual, “Maintenance Interval Schedule” for more information on maintenance items.

Engine Service Life

Engine efficiency and maximum utilization of engine performance depend on the adherence to proper operation and maintenance recommendations. In addition, use recommended fuels, coolants, and lubricants. Use the Operation and Maintenance Manual as a guide for required engine maintenance.

Expected engine life is generally predicted by the average power that is demanded. The average power that is demanded is based on fuel consumption of the engine over time. Reduced hours of operation at full throttle and/or operating at reduced throttle settings result in a lower average power demand. Reduced hours of operation will increase the length of operating time before an engine overhaul is required.

Product Identification Information

i02280116

Engine Identification

Perkins engines are identified by a serial number. This number is shown on a serial number plate that is mounted on the left hand side of the engine block.

An example of an engine number is RE12345U090001H.

RE _____ Type of engine

RE12345 _____ Engine List Number

U _____ Built in the United Kingdom

090001 _____ Engine Serial Number

H _____ Year of Manufacture

Perkins dealers need these numbers in order to determine the components that were included with the engine. This permits accurate identification of replacement part numbers.

i01940474

Serial Number Plate

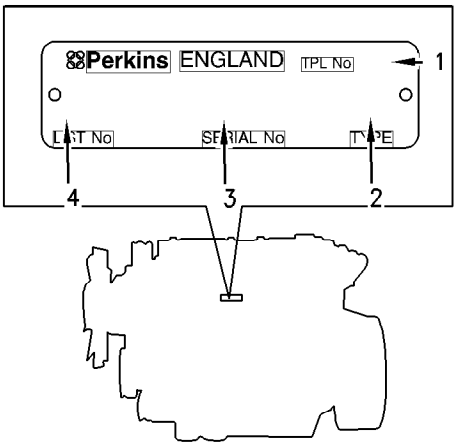

Illustration 19 g00994966

Typical serial number plate

(1) Temporary Parts List number
(2) Type
(3) Serial number
(4) List number

The Serial Number Plate is located on the left side of the cylinder block behind the high pressure pipes of the Fuel injection pump.

The following information is stamped on the Serial Number Plate: Engine serial number, Model and Arrangement number.

i02164876

Reference Numbers

Information for the following items may be needed to order parts. Locate the information for your engine. Record the information in the appropriate space. Make a copy of this list for a record. Keep the information for future reference.

Record for Reference

Engine Model _____

Engine Serial number _____

Engine Low Idle rpm _____

Engine Full Load rpm _____

Primary Fuel Filter _____

Water Separator Element _____

Secondary Fuel Filter Element _____

Lubrication Oil Filter Element _____

Auxiliary Oil Filter Element _____

Total Lubrication System Capacity _____

Total Cooling System Capacity _____

Air Cleaner Element _____

Fan Drive Belt _____

Alternator Belt _____

i02758852

Emissions Certification Film

Label for compliant engines

Typical examples of emissions labels

IMPORTANT ENGINE INFORMATION Perkins

Engine Type

Engine Family: 5PKXL04.4RH2 List: Displacement: 4.4
List: RH37881

E11 Refer to Manufacturer

e11*97/68FA*
2001/63*0247*00

EPA Family Max Values	Advertised kw:86. Fuel Rate: **.0 mm3/stk Init. Timing:* DEG ATDC idle RPM: ****

Factory setting	Reset if Applicable
☐ 2372/2500	☐
☒ 2372/2500	☐
☐	☐
☐	☐

Settings are to be made with engine at normal operating temperature with transmission in neutral. This engine conforms to 2004 U.S. EPA non - road and California off - road Regulations for large C.I. engines and is certified to operate on commercially available diesel fuel.

Emission Control System: **** ** ECM	Valve Lash Cold (inch): Exhaust 0.0** Inlet 0.00*	Engine Label	Use Service Tool to verify current engine settings
Hanger No.	position (**)	Label No. 3181A081	

Illustration 20 g01173630

This typical example of a label is installed on engines that have electronic fuel injection systems and installed on engines that have electronic fuel injection pumps.

IMPORTANT ENGINE INFORMATION			Perkins
Engine Family: 5PKXL04.0AJ1 List: RE81372 Engine Type: 2160/2200 Displacement: 4.400		E 11	Refer to Manufacturer
	Advertised kw:62 @ RPM: 2200 Fuel Rate at adv kw: 64.2 mm3/stk Init. Timing:* DEG BTDC idle RPM: ****	e11*97/68CA*00*000*0089*01	
Settings are to be made with engine at normal operating temperature with transmission in neutral. This engine conforms to 2005 U.S. EPA non - road and California off - road Regulations for large C.I. engines and is certified to operate on commercially available diesel fuel.			
Emission Control System: DDI	Valve Lash Cold (inch): Exhaust 0.0** Inlet 0.00*	Engine Label	
Hanger No.	position		Label No. 3181A081

Illustration 21 g01156733

This typical example of a label is installed on engines that have mechanical fuel injection pumps.

Label for engines that comply with MSHA emissions

Perkins®	LABEL NUMBER 3181
MSHA APPR NO.	
ENGINE MODEL	
CURVE NO.	
RATED HP RATED kW	AT rpm
HIGH IDLE	rpm
MAX ALT.	m
VENT RATE	cfm

Illustration 22 g01381316

Typical example

The label that is shown in illustration 22 is for engines that operate in underground coal mines in North America. The label is installed on engines that comply with the Mine Safety and Health Administration (MSHA) emissions. Approved diesel engines shall be identified by an approved mark that is legible and permanent. The approved mark is scribed with the approved MSHA number. The label should be securely attached to the diesel engine.

Label for engines that do not comply with emissions

EMISSIONS CONTROL INFORMATION Perkins

ENGINE FAMILY: ******
ENGINE DISPLACEMENT: *****
MODEL YEAR: 2005

This non - road engine may be used as a REPLACEMENT engine within the EU, as per the provisions of Directive 97/68/EC

INFORMATION APPLICABLE TO USA ONLY

This non - road engine does not comply with either federal non - road or California off - road engine emission regulation requirements. Sale or installation of this engine is a violation of federal and Californian law subject to civil penalty for any purpose other than as an EXPORT - ONLY or REPLACEMENT engine.
Export - only engine is indicated by an additional attached tag.

Hanger No** Position **** Label No. 3181A081

Illustration 23 g01156734

This typical example of a label is installed on engines that do not comply with emissions.

EMISSIONS CONTROL INFORMATION Perkins

ENGINE FAMILY: 1104C - 44TA
ENGINE DISPLACEMENT: 4. 400
MODEL YEAR: 2005

FOLLOWING INFORMATION APPLICABLE TO USA ONLY
This non - road engine does not comply with either federal non - road or California off - road engine emission regulation requirement.
Sale or installation of this engine can only be for
STATIONARY ENGINE
Use only as defined by CFR 40 PART 89.2.

Hanger No ** Position (81) Label 318A081

Illustration 24 g01157127

This typical example of a label is installed on engines that are stationary engines.

Operation Section

Lifting and Storage

i07462460

Engine Lifting

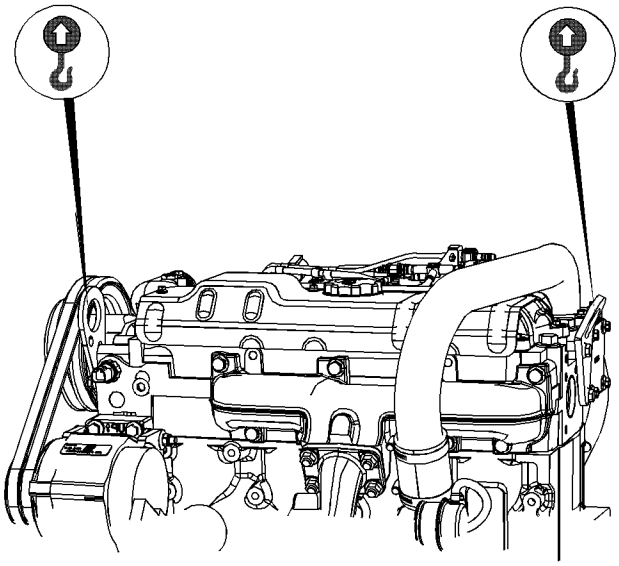

Illustration 25 g03729078

Typical example of the four cylinder lifting eyes

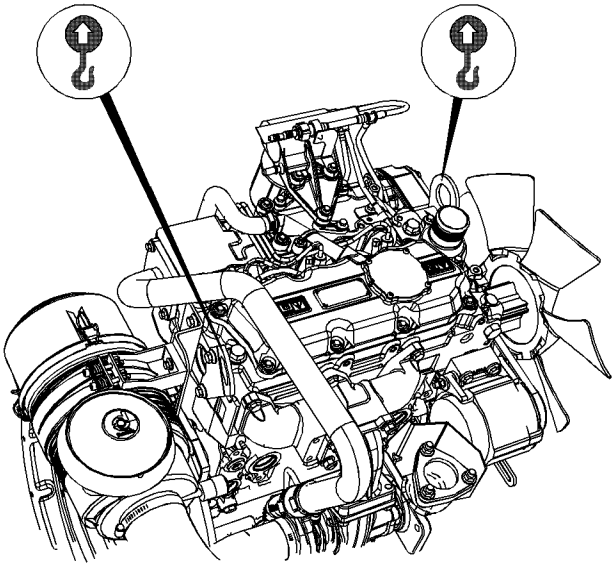

Illustration 26 g03791046

Typical example of the three cylinder lifting eyes

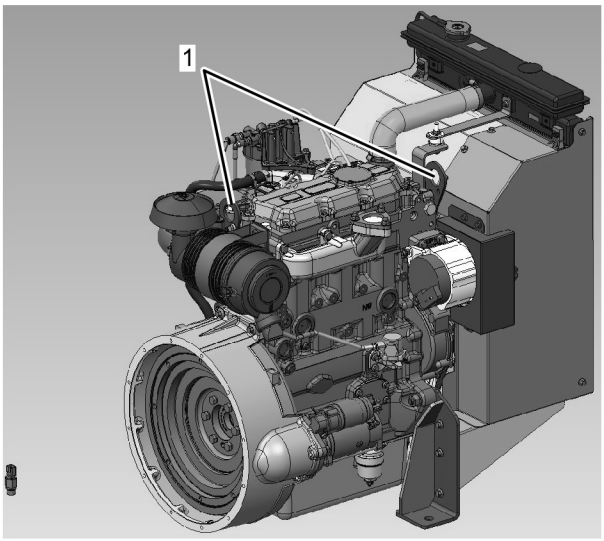

Illustration 27 g03791033

The configuration of the lifting eyes in certain three cylinder applications may be installed as shown in illustration 27 .

(1) Lifting eyes

NOTICE

Always inspect lifting eyebolts and all other lifting equipment for damage before performing any lifting. Never bend the eyebolts and the brackets. Never perform product lifting if components are damaged. Only load the eyebolts and the brackets under tension. Remember that the capacity of an eyebolt is less as the angle between the supporting members and the object becomes less than 90 degrees.

When it is necessary to remove a component at an angle, only use a link bracket that is properly rated for the weight.

Use a hoist to remove heavy components. Use an adjustable lifting beam to lift the engine. All supporting members (chains and cables) should be parallel to each other. The chains and cables should be perpendicular to the top of the object that is being lifted.

Some removals require lifting the fixtures in order to obtain correct balance and safety.

To remove the engine ONLY, use the lifting eyes that are on the engine.

Lifting eyes are designed and installed for specific engine arrangements. Alterations to the lifting eyes and/or the engine make the lifting eyes and the lifting fixtures obsolete. If alterations are made, ensure that correct lifting devices are provided. Consult your Perkins dealer or your Perkins distributor for information regarding fixtures for correct engine lifting.

i05876583

Engine Storage

Perkins are not responsible for damage which may occur when an engine is in storage after a period in service.

Your Perkins dealer or your Perkins distributor can assist in preparing the engine for extended storage periods.

Condition for Storage

The engine must be stored in a water proof building. The building must be kept at a constant temperature. Engines that are filled with Perkins ELC will have coolant protection to an ambient temperature of −36° C (−32.8° F). The engine must not be subjected to extreme variations in temperature and humidity.

Storage Period

An engine can be stored for up to 6 months provided all the recommendation are adhered to.

Storage Procedure

Keep a record of the procedure that has been completed on the engine.

Note: Do not store an engine that has biodiesel in the fuel system.

1. Ensure that the engine is clean and dry.

a. If the engine has been operated using biodiesel, the system must be drained and new filters installed. The fuel tank will require flushing.

b. Fill the fuel system with an acceptable fuel. For more information on acceptable fuels refer to this Operation and Maintenance Manual, “Fluid recommendations”. Operate the engine for 15 minutes in order to remove all biodiesel from the system.

2. Drain any water from the primary filter water separator. Ensure that the fuel tank is full.

3. The engine oil will not need to be drained in order to store the engine. Provided the correct specification of engine oil is used the engine can be stored for up to 6 months. For the correct specification of engine oil refer to this Operation and Maintenance Manual, “Fluid recommendations”.

4. Remove the drive belt from the engine.

Sealed Coolant System

Ensure that the cooling system is filled with Perkins ELC, or an antifreeze that meets “ASTM D6210” specification.

Open Cooling System

Ensure that all cooling drain plugs have been opened. Allow the coolant to drain. Install the drain plugs. Place a vapor phase inhibitor into the system. The coolant system must be sealed once the vapor phase inhibitor has been introduced. The effect of the vapor phase inhibitor will be lost if the cooling system is open to the atmosphere.

For maintenance procedures refer to this Operation and Maintenance Manual.

Monthly Checks

The crankshaft must be rotated in order to change the spring loading on the valve train. Rotate the crankshaft more than 180 degrees. Visibly check for damage or corrosion to the engine.

Ensure that the engine is covered completely before storage. Log the procedure in the record for the engine.

Gauges and Indicators

i02164190

Gauges and Indicators

Your engine may not have the same gauges or all of the gauges that are described. For more information about the gauge package, see the OEM information.

Gauges provide indications of engine performance. Ensure that the gauges are in good working order. Determine the normal operating range by observing the gauges over a period of time.

Noticeable changes in gauge readings indicate potential gauge or engine problems. Problems may also be indicated by gauge readings that change even if the readings are within specifications. Determine and correct the cause of any significant change in the readings. Consult your Perkins dealer or your Perkins distributor for assistance.

NOTICE
If no oil pressure is indicated, STOP the engine. If maximum coolant temperature is exceeded, STOP the engine. Engine damage can result.

Engine Oil Pressure – The oil pressure should be greatest after a cold engine is started. The typical engine oil pressure with SAE10W30 is 207 to 413 kPa (30 to 60 psi) at rated rpm.

A lower oil pressure is normal at low idle. If the load is stable and the gauge reading changes, perform the following procedure:

1. Remove the load.

2. Reduce engine speed to low idle.

3. Check and maintain the oil level.

Jacket Water Coolant Temperature – Typical temperature range is 71 to 96°C (160 to 205°F). The maximum allowable temperature with the pressurized cooling system at 48 kPa (7 psi) is 110°C (230°F). Higher temperatures may occur under certain conditions. The water temperature reading may vary according to load. The reading should never exceed the boiling point for the pressurized system that is being used.

If the engine is operating above the normal range and steam becomes apparent, perform the following procedure:

1. Reduce the load and the engine rpm.

2. Inspect the cooling system for leaks.

3. Determine if the engine must be shut down immediately or if the engine can be cooled by reducing the load.

Tachometer – This gauge indicates engine speed (rpm). When the throttle control lever is moved to the full throttle position without load, the engine is running at high idle. The engine is running at the full load rpm when the throttle control lever is at the full throttle position with maximum rated load.

NOTICE
To help prevent engine damage, never exceed the high idle rpm. Overspeeding can result in serious damage to the engine. The engine can be operated at high idle without damage, but should never be allowed to exceed high idle rpm.

Ammeter – This gauge indicates the amount of charge or discharge in the battery charging circuit. Operation of the indicator should be to the right side of “0” (zero).

Fuel Level – This gauge indicates the fuel level in the fuel tank. The fuel level gauge operates when the “START/STOP” switch is in the “ON” position.

Service Hour Meter – The gauge indicates operating time of the engine.

Features and Controls

i11130414

Sensors and Electrical Components

Failure of Switches

All Switches

A failure of any of the switches may be caused by one of the following malfunctions:

- Switch output is shorted to “- battery” or “+ battery” .
- Measured reading of the switch is out of the specification.

Coolant Temperature Switch

The coolant temperature switch monitors engine coolant temperature. The output can indicate a high coolant temperature through a relay or a lamp. The coolant temperature sensor is used to determine initiation of the Cold Start Condition.

Failure of the Coolant Temperature Switch

The diagnostic lamp will warn the operator about the status of the coolant temperature sensor. A failure of the coolant temperature sensor will not cause a shutdown of the engine or any horsepower change.

Electronic Control Governor (If equipped)

If equipped, the electronic control governor controls the engine speed. Refer to Special Instruction, KENR6206, “Perkins Logic Control Governor One (LCG1) and Perkins Logic Control Governor Two (LCG2)” for more information.

Engine Oil Pressure Switch

The engine oil pressure switch detects engine oil pressure for diagnostic purposes.

Low Oil Pressure Warning

The setpoint for the low-pressure warning is dependent upon the engine speed. The fault will be active and logged only if the engine has been running for more than 8 seconds.

Very Low Oil Pressure Warning

The very low oil pressure setpoint is dependent upon the engine speed.

Failure of the Engine Oil Pressure Switch

The diagnostic lamp warns the user about the status of the engine oil pressure switch. The engine oil pressure-related strategies will be disabled in the event of a failure of the engine oil pressure switch. A failure of the engine oil pressure switch will not cause a shutdown of the engine or any horsepower change.

Cybersecurity Information

- Parameter Programming History Table (Machinery Regulation (MR) (EU) 2023/1230)
- Engine Software Part Number
- Configurable Safety Parameter History Table (Machinery Regulation (MR) (EU) 2023/1230)

The engine control system utilizes an open CAN bus (SAE J1939) communication protocol as the integration point with the machine’s control system. This may be vulnerable to cyberattacks if an individual gains physical access to the engine’s wiring or electrical connection points.

In addition, it is the responsibility of the engine installer to assess the cybersecurity risks associated with the equipment in which the engine is installed and to implement appropriate protective measures in accordance with the Cyber Resilience Act (CRA), Regulation (EU) 2024/2847.

Reporting Cybersecurity Vulnerabilities

If a potential cybersecurity vulnerability related to this product, its embedded software, or associated digital components is identified, please report it using the following contact website:

https://customer.perkins.com/en/product-support/report-potential-security-vulnerabilities.html

Engine Starting

i02194223

Before Starting Engine

Before the engine is started, perform the required daily maintenance and any other periodic maintenance that is due. Refer to the Operation and Maintenance Manual, “Maintenance Interval Schedule” for more information.

- For the maximum service life of the engine, make a thorough inspection within the engine compartment before the engine is started. Look for the following items: oil leaks, coolant leaks, loose bolts and excessive dirt and/or grease. Remove any excess dirt and/or grease buildup. Repair any faults that were identified during the inspection.
- Inspect the cooling system hoses for cracks and for loose clamps.
- Inspect the alternator and accessory drive belts for cracks, breaks, and other damage.
- Inspect the wiring for loose connections and for worn wires or frayed wires.
- Check the fuel supply. Drain water from the water separator (if equipped). Open the fuel supply valve (if equipped).

NOTICE
All valves in the fuel return line must be open before and during engine operation to help prevent high fuel pressure. High fuel pressure may cause filter housing failure or other damage.

If the engine has not been started for several weeks, fuel may have drained from the fuel system. Air may have entered the filter housing. Also, when fuel filters have been changed, some air pockets will be trapped in the engine. In these instances, prime the fuel system. Refer to the Operation and Maintenance Manual, “Fuel System - Prime” for more information on priming the fuel system.

WARNING

Engine exhaust contains products of combustion which may be harmful to your health. Always start and operate the engine in a well ventilated area and, if in an enclosed area, vent the exhaust to the outside.

- Do not start the engine or move any of the controls if there is a “DO NOT OPERATE” warning tag or similar warning tag attached to the start switch or to the controls.
- Ensure that the areas around the rotating parts are clear.
- All of the guards must be put in place. Check for damaged guards or for missing guards. Repair any damaged guards. Replace damaged guards and/or missing guards.
- Disconnect any battery chargers that are not protected against the high current drain that is created when the electric starting motor is engaged. Check electrical cables and check the battery for poor connections and for corrosion.
- Reset all of the shutoffs or alarm components (if equipped).
- Check the engine lubrication oil level. Maintain the oil level between the “ADD” mark and the “FULL” mark on the engine oil level gauge.
- Check the coolant level. Observe the coolant level in the header tank (if equipped). Maintain the coolant level to the “FULL” mark on the header tank.
- If the engine is not equipped with a header tank maintain the coolant level within 13 mm (0.5 inch) of the bottom of the filler pipe. If the engine is equipped with a sight glass, maintain the coolant level in the sight glass.
- Observe the air cleaner service indicator (if equipped). Service the air cleaner when the yellow diaphragm enters the red zone, or when the red piston locks in the visible position.
- Ensure that any equipment that is driven by the engine has been disengaged from the engine. Minimize electrical loads or remove any electrical loads.

i02198348

Starting the Engine

WARNING

Do not use aerosol types of starting aids such as ether. Such use could result in an explosion and personal injury.

Refer to the OMM for your type of controls. Use the following procedure to start the engine.

1. If equipped, move the throttle lever to the full throttle position before you start the engine.

NOTICE
Do not crank the engine for more than 30 seconds. Allow the electric starting motor to cool for two minutes before cranking the engine again.

2. Turn the engine start switch to the START position. Hold the engine start switch in the START position and crank the engine.
3. When the engine starts, release the engine start switch.
4. If equipped, slowly move the throttle lever to the low idle position and allow the engine to idle. Refer to the Operation and Maintenance Manual, “After Starting Engine” topic.
5. If the engine does not start, release the engine start switch and allow the electric starting motor to cool. Then, repeat steps 2 through step 4.
6. Turn the engine start switch to the OFF position in order to stop the engine.

i05927255

Cold Weather Starting

WARNING

Do not use aerosol types of starting aids such as ether. Such use could result in an explosion and personal injury.

Startability will be improved at temperatures below −18 °C (0 °F) from the use of a jacket water heater or extra battery capacity.

The following items provide a means of minimizing starting problems and fuel problems in cold weather: engine oil pan heaters, jacket water heaters, fuel heaters and fuel line insulation.

Use the procedure that follows for cold weather starting.

1. If equipped, move the throttle lever to the full throttle position before you start the engine.
2. If equipped, turn the engine start switch to the HEAT position. Hold the engine start switch in the HEAT position for 6 seconds until the glow plug indicator light illuminates. This action will activate the glow plugs and aid in the starting of the engine.

NOTICE
Do not crank the engine for more than 30 seconds. Allow the electric starting motor to cool for two minutes before cranking the engine again.

3. While the glow plug indicator light is illuminated, turn the engine start switch to the START position and crank the engine.

Note: If the glow plug indicator light illuminates rapidly for 2 to 3 seconds, or if the glow plug indicator light fails to illuminate, a malfunction exists in the cold start system. Do not use ether or other starting fluids to start the engine.

4. When the engine starts, release the engine start switch key.
5. If the engine does not start, release the engine start switch and allow the starter motor to cool. Then, repeat steps 2 through step 4.
6. If the engine is equipped with a throttle allow the engine to idle for 3 to 5 minutes, or allow the engine to idle until the water temperature indicator begins to rise. The engine should run at low idle smoothly until speed is gradually increased to high idle. Allow the white smoke to disperse before proceeding with normal operation.
7. Operate the engine at low load until all systems reach operating temperature. Check the gauges during the warm-up period.
8. Turn the engine start switch to the OFF position in order to stop the engine.

i02177935

Starting with Jump Start Cables

WARNING

Improper jump start cable connections can cause an explosion resulting in personal injury.

Prevent sparks near the batteries. Sparks could cause vapors to explode. Do not allow jump start cable ends to contact each other or the engine.

Note: If it is possible, first diagnose the reason for the starting failure. Make any necessary repairs. If the engine will not start only due to the condition of the battery, either charge the battery, or start the engine with jump start cables. The condition of the battery can be rechecked after the engine has been switched OFF.

NOTICE

Using a battery source with the same voltage as the electric starting motor. Use ONLY equal voltage for jump starting. The use of higher voltage will damage the electrical system.

Do not reverse the battery cables. The alternator can be damaged. Attach ground cable last and remove first.

When using an external electrical source to start the engine, turn the generator set control switch to the “OFF” position. Turn all electrical accessories OFF before attaching the jump start cables.

Ensure that the main power switch is in the OFF position before attaching the jump start cables to the engine being started.

1. Turn the start switch to the OFF position. Turn off all the engine's accessories.
2. Connect one positive end of the jump start cable to the positive cable terminal of the discharged battery. Connect the other positive end of the jump start cable to the positive cable terminal of the electrical source.
3. Connect one negative end of the jump start cable to the negative cable terminal of the electrical source. Connect the other negative end of the jump start cable to the engine block or to the chassis ground. This procedure helps to prevent potential sparks from igniting the combustible gases that are produced by some batteries.
4. Start the engine.
5. Immediately after the stalled engine is started, disconnect the jump start cables in reverse order.

After jump starting, the alternator may not be able to fully recharge batteries that are severely discharged. The batteries must be replaced or charged to the correct voltage with a battery charger after the engine is stopped. Many batteries which are considered unusable are still rechargeable. Refer to Operation and Maintenance Manual, “Battery - Replace” and Testing and Adjusting Manual, “Battery - Test”.

i06791278

After Starting Engine

Note: In temperatures from 0°C to 60°C (32°F to 140°F), the warm-up time is approximately 3 minutes. In temperatures below 0°C (32°F), extra warm-up time may be required.

When the engine idles during warm-up, observe the following conditions:

- Check for any fluid or for any air leaks at idle rpm and at one-half full rpm (no load on the engine) before operating the engine under load. This action may not be possible in some applications.
- Operate the engine at low idle until all systems achieve operating temperatures. Check all gauges during the warm-up period.

Constant speed engines should be allowed to operate at low idle for 3 minutes before used at operational speed. If the low idle option is not available, then operate the engine at operational speed with no load for 2 minutes.

Note: Gauge readings should be observed and the data should be recorded frequently while the engine is operating. Comparing the data over time will help to determine normal readings for each gauge. Comparing data over time will also help detect abnormal operating developments. Significant changes in the readings should be investigated.

Engine Operation

i06015869

Engine Operation

Proper operation and maintenance are key factors in obtaining the maximum life and economy of the engine. If the directions in the Operation and Maintenance Manual are followed, costs can be minimized and engine service life can be maximized.

The engine can be operated at the rated rpm after the engine reaches operating temperature. The engine will reach normal operating temperature sooner during a low engine speed (rpm) and during a low-power demand. This procedure is more effective than idling the engine at no load. The engine should reach operating temperature in a few minutes.

Gauge readings should be observed and the data should be recorded frequently while the engine is operating. Comparing the data over time will help to determine normal readings for each gauge. Comparing data over time will also help detect abnormal operating developments. Significant changes in the readings should be investigated.

i06026912

Engine Warm-up

Variable Speed Engine

1. Run the engine at low idle for 3 to 5 minutes. Or run the engine at low idle until the jacket water temperature starts to rise.

   More time may be necessary when the temperature is below −18°C (0°F).

2. Check all of the gauges during the warm-up period.
3. Perform a walk-around inspection. Check the engine for fluid leaks and air leaks.
4. Increase the rpm to the rated rpm. Check for fluid leaks and air leaks. The engine may be operated at full rated rpm and at full load when the temperature of the water jacket reaches 60°C (140°F).

Constance Speed Engine

1. Run the engine for 3 to 5 minutes.

   More time may be necessary when the temperature is below −18°C (0°F).

2. Check all of the gauges during the warm-up period.
3. Perform a walk-around inspection. Check the engine for fluid leaks and air leaks, only then apply the load.

i02330149

Fuel Conservation Practices

The efficiency of the engine can affect the fuel economy. Perkins design and technology in manufacturing provides maximum fuel efficiency in all applications. Follow the recommended procedures in order to attain optimum performance for the life of the engine.

- Avoid spilling fuel.

Fuel expands when the fuel is warmed up. The fuel may overflow from the fuel tank. Inspect fuel lines for leaks. Repair the fuel lines, as needed.

- Be aware of the properties of the different fuels. Use only the recommended fuels.
- Avoid unnecessary idling.

Shut off the engine rather than idle for long periods of time.

- Observe the air cleaner service indicator frequently. Keep the air cleaner elements clean.
- Maintain the electrical systems.

One damaged battery cell will overwork the alternator. This will consume excess power and excess fuel.

- Ensure that the drive belts are correctly adjusted. The drive belts should be in good condition.
- Ensure that all of the connections of the hoses are tight. The connections should not leak.
- Ensure that the driven equipment is in good working order.
- Cold engines consume excess fuel. Utilize heat from the jacket water system and the exhaust system, when possible. Keep cooling system components clean and keep cooling system components in good repair. Never operate the engine without water temperature regulators. All of these items will help maintain operating temperatures.

Engine Stopping

i01929389

Stopping the Engine

NOTICE
Stopping the engine immediately after it has been working under load can result in overheating and accelerated wear of the engine components.

If the engine has been operating at high rpm and/or high loads, run at low idle for at least three minutes to reduce and stabilize internal engine temperature before stopping the engine.

Avoiding hot engine shutdowns will maximize turbocharger shaft and bearing life.

Prior to stopping an engine that is being operated at low loads, operate the engine at low idle for 30 seconds before stopping. If the engine has been operating at highway speeds and/or at high loads, operate the engine at low idle for at least three minutes. This procedure will cause the internal engine temperature to be reduced and stabilized.

Ensure that the engine stopping procedure is understood. Stop the engine according to the shutoff system on the engine or refer to the instructions that are provided by the OEM.

- To stop the engine, turn the ignition key switch to the OFF position.

i07764840

Emergency Stopping

NOTICE
Emergency shutoff controls are for EMERGENCY use ONLY. DO NOT use emergency shutoff devices or controls for normal stopping procedure.

The Original Equipment Manufacturer (OEM) may have equipped the application with an emergency stop button. For more information about the emergency stop button, refer to the OEM information.

Ensure that any components for the external system that support the engine operation are secured after the engine is stopped.

i01903608

After Stopping Engine

Note: Before you check the engine oil, do not operate the engine for at least 10 minutes in order to allow the engine oil to return to the oil pan.

- Check the crankcase oil level. Maintain the oil level between the “ADD” mark and the “FULL” mark on the oil level dipstick.
- If necessary, perform minor adjustments. Repair any leaks and tighten any loose bolts.
- Note the required service interval. Perform the maintenance that is in the Operation and Maintenance Manual, “Maintenance Interval Schedule”.
- Fill the fuel tank in order to help prevent accumulation of moisture in the fuel. Do not overfill the fuel tank.

NOTICE
Only use antifreeze/coolant mixtures recommended in the Coolant Specifications that are in the Operation and Maintenance Manual. Failure to do so can cause engine damage.

- Allow the engine to cool. Check the coolant level.
- If freezing temperatures are expected, check the coolant for the correct antifreeze protection. The cooling system must be protected against freezing to the lowest expected outside temperature. Add the correct coolant/water mixture, if necessary.
- Perform all required periodic maintenance on all driven equipment. This maintenance is outlined in the instructions from the OEM.

Cold Weather Operation

i05927231

Cold Weather Operation

Perkins Diesel Engines can operate effectively in cold weather. During cold weather, the starting and the operation of the diesel engine is dependent on the following items:

- The type of fuel that is used
- The viscosity of the engine oil
- The operation of the glow plugs
- Optional Cold starting aid
- Battery condition
- Ambient air temperature and altitude
- Parasitic load of the application
- Application hydraulic and transmission oil viscosities

This section will cover the following information:

- Potential problems that are caused by cold-weather operation
- Suggest steps which can be taken in order to minimize starting problems and operating problems when the ambient air temperature is between 0° to−40 °C (32° to 40 °F).

The operation and maintenance of an engine in freezing temperatures is complex . This complexity is because of the following conditions:

- Weather conditions
- Engine applications

Recommendations from your Perkins dealer or your Perkins distributor are based on past proven practices. The information that is contained in this section provides guidelines for cold-weather operation.

Hints for Cold Weather Operation

- If the engine will start, operate the engine until a minimum operating temperature of 81 °C (177.8 °F) is achieved. Achieving operating temperature will help prevent the intake valves and exhaust valves from sticking.
- The cooling system and the lubrication system for the engine do not lose heat immediately upon shutdown. This means that an engine can be shut down for a period of time, and the engine can still be ability to start readily.
- Install the correct specification of engine lubricant before the beginning of cold weather.
- Check all rubber parts (hoses, fan drive belts.) weekly.
- Check all electrical wiring and connections for any fraying or damaged insulation.
- Keep all batteries fully charged and warm.
- Fill the fuel tank at the end of each shift.
- Check the air cleaners and the air intake daily. Check the air intake more often when you operate in snow.
- Ensure that the glow plugs are in working order. Refer to Testing and Adjusting Manual, “Glow Plug - Test”.

WARNING

Personal injury or property damage can result from alcohol or starting fluids.

Alcohol or starting fluids are highly flammable and toxic and if improperly stored could result in injury or property damage.

WARNING

Do not use aerosol types of starting aids such as ether. Such use could result in an explosion and personal injury.

- For jump starting with cables in cold weather, refer to the Operation and Maintenance Manual, “Starting with Jump Start Cables.” for instructions.

Viscosity of the Engine Lubrication Oil

Correct engine oil viscosity is essential. Oil viscosity affects the amount of torque that is needed to crank the engine. Refer to this Operation and Maintenance Manual, “Fluid Recommendations” for the recommended viscosity of oil.

Recommendations for the Coolant

Provide cooling system protection for the lowest expected outside temperature. Refer to this Operation and Maintenance Manual, “Fluid Recommendations” for the recommended coolant mixture.

In cold weather, check the coolant often for the correct glycol concentration in order to ensure adequate freeze protection.

Engine Block Heaters

Engine block heaters (if equipped) heat the engine jacket water that surrounds the combustion chambers. This heat provides the following functions:

- Startability is improved.
- Warm up time is reduced.

An electric block heater can be activated once the engine is stopped. An effective block heater is typically a 1250/1500 W unit. Consult your Perkins dealer or your Perkins distributor for more information.

Idling the Engine

When idling after the engine is started in cold weather, increase the engine rpm from 1000 to 1200 rpm. This increase in RPM will warm up the engine more quickly. Maintaining an elevated low idle speed for extended periods will be easier with the installation of a hand throttle. The engine should not be “raced” in order to speed up the warm-up process.

While the engine is idling, the application of a light load (parasitic load) will assist in achieving the minimum operating temperature. The minimum operating temperature is 82 °C (179.6 °F).

Recommendations for Coolant Warm Up

Warm up an engine that has cooled below normal operating temperatures due to inactivity. The warm-up should be performed before the engine is returned to full operation. During operation in very cold temperature conditions, damage to engine valve mechanisms can result from engine operation for short intervals. This action can happen if the engine is started and the engine is stopped many times without being operated in order to warm up completely.

When the engine is operated below normal operating temperatures, fuel and oil are not completely burned in the combustion chamber. This fuel and oil causes soft carbon deposits to form on the valve stems. Generally, the deposits do not cause problems and the deposits are burned off during operation at normal engine operating temperatures.

When the engine is started and the engine is stopped many times without being operated in order to warm up completely, the carbon deposits become thicker. This action can cause the following problems:

- Free operation of the valves is prevented.
- Valves become stuck.
- Pushrods may become bent.
- Other damage to valve train components can result.

For this reason, when the engine is started, the engine must be operated until the coolant temperature is 71 °C (160 °F) minimum. Carbon deposits on the valve stems will be kept at a minimum. The free operation of the valves and the valve components will be maintained.

In addition, the engine must be thoroughly warmed in order to keep other engine parts in better condition and the service life of the engine will be generally extended. Lubrication will be improved. There will be less acid and less sludge in the oil. This lubrication will provide longer service life for the engine bearings, the piston rings, and other parts. However, limit unnecessary idle time to 10 minutes in order to reduce wear and unnecessary fuel consumption.

The Water Temperature Regulator and Insulated Heater Lines

The engine is equipped with a water temperature regulator. When the engine coolant is below the correct operating temperature, jacket water circulates through the engine cylinder block and into the engine cylinder head. The coolant then returns to the cylinder block via an internal passage that bypasses the valve of the coolant temperature regulator. This system ensures that coolant flows around the engine under cold operating conditions. The water temperature regulator begins to open when the engine jacket water has reached the correct minimum operating temperature. As the jacket water coolant temperature rises above the minimum operating temperature the water temperature regulator opens further allowing more coolant through the radiator to dissipate excess heat.

The progressive opening of the water temperature regulator operates the progressive closing of the bypass passage between the cylinder block and head. This system ensures maximum coolant flow to the radiator in order to achieve maximum heat dissipation.

Note: Perkins discourages the use of all air flow restriction devices such as radiator shutters. Restriction of the air flow can result in the following: high exhaust temperatures, power loss, excessive fan usage and reduction in fuel economy.

A cab heater is beneficial in very cold weather. The feed from the engine and the return lines from the cab should be insulated in order to reduce heat loss to the outside air.

Insulating the Air Inlet and Engine Compartment

When temperatures below −18 °C (−0 °F) will be frequently encountered, an air cleaner inlet that is located in the engine compartment may be specified. An air cleaner that is located in the engine compartment may also minimize the entry of snow into the air cleaner. Also, heat that is rejected by the engine helps to warm the intake air.

Additional heat can be retained around the engine by insulating the engine compartment.

i05927268

Fuel and the Effect from Cold Weather

Note: Only use grades of fuel that are recommended by Perkins. Refer to this Operation and Maintenance Manual, “Fluid Recommendations”.

Properties of the diesel fuel can have a significant effect on the engine cold start capability. Critical to the low temperature properties of diesel fuel is the acceptability for the minimum ambient temperature the engine is expected to see in operation. Following properties are used to define fuels low temperature capability:

- Cloud point
- Pour point
- Cold Filter Plugging Point (CFPP)

The cloud point of the fuel is the temperature at which waxes naturally found in diesel fuel begins to form crystals. The cloud point of the fuel must be below lowest ambient temperature to prevent filters from plugging.

CFPP is a temperature at which a particular fuel will pass through a standardized filtration device. The CFPP gives an estimate of the lower operability temperature of fuel.

Pour point is the last temperature before the fuel flow stops and waxing of the fuel will start.

Be aware of these properties when diesel fuel is purchased. Consider the average ambient air temperature for the engines application. Engines that are fueled in one climate may not operate well if the engines are shipped to colder climate. Problems can result due to changes in temperature.

Before troubleshooting for low power or for poor performance in the winter, check the fuel for waxing.

The following components can provide a means of minimizing fuel waxing problems in cold weather:

- Fuel heaters, which may be an OEM option
- Fuel line insulation, which may be an OEM option

Winter and arctic grades of diesel fuel are available in the countries and territories with severe winters. For more information refer to the Operation and Maintenance Manual, “Cold Weather Operation”

Another important fuel property which can affect cold start and operation of diesel engine is cetane number. For more information refer to the Operation and Maintenance Manual, “Fluid Recommendations”.

i01903588

Fuel Related Components in Cold Weather

Fuel Tanks

Condensation can form in partially filled fuel tanks. Top off the fuel tanks after you operate the engine.

Fuel tanks should contain some provision for draining water and sediment from the bottom of the tanks. Some fuel tanks use supply pipes that allow water and sediment to settle below the end of the fuel supply pipe.

Some fuel tanks use supply lines that take fuel directly from the bottom of the tank. If the engine is equipped with this system, regular maintenance of the fuel system filter is important.

Drain the water and sediment from any fuel storage tank at the following intervals: weekly, oil changes and refueling of the fuel tank. This will help prevent water and/or sediment from being pumped from the fuel storage tank and into the engine fuel tank.

Fuel Filters

It is possible that a primary fuel filter is installed between the fuel tank and the engine fuel inlet. After you change the fuel filter, always prime the fuel system in order to remove air bubbles from the fuel system. Refer to the Operation and Maintenance Manual in the Maintenance Section for more information on priming the fuel system.

The micron rating and the location of a primary fuel filter is important in cold weather operation. The primary fuel filter and the fuel supply line are the most common components that are affected by cold fuel.

Fuel Heaters

Note: The OEM may equip the application with fuel heaters. If this is the case, disconnect an electric type of fuel heater in warm weather in order to prevent overheating of the fuel. If the type of fuel heater is a heat exchanger, the OEM should have included a bypass for warm weather. Ensure that the bypass is operational during warm weather in order to prevent overheating of the fuel.

For more information about fuel heaters (if equipped), refer to the OEM information.

Maintenance Section

Refill Capacities

i08754664

Refill Capacities

Lubrication System

The refill capacities for the engine crankcase reflect the approximate capacity of the crankcase or sump plus standard oil filters. Auxiliary oil filter systems will require additional oil. Refer to the OEM specifications for the capacity of the auxiliary oil filter. Refer to the Operation and Maintenance Manual, “Maintenance Section” for more information on Lubricant Specifications.

1103 Engine

Table 5

1103 Engine		
Compartment or System	**Liters**	**Quarts**
Standard Oil Sump for the Engine Crankcase (1)	6.5	7

(1) These values are the approximate capacities for the crankcase oil sump which include the standard factory installed oil filters. Engines with auxiliary oil filters will require additional oil. Refer to the OEM specifications for the capacity of the auxiliary oil filter.

1104 Engine

Table 6

1104 Engine		
Compartment or System	**Liters**	**Quarts**
Standard Oil Sump for the Engine Crankcase (1)	6.5	7

(continued)

(Table 6, contd)

(1) These values are the approximate capacities for the crankcase oil sump which include the standard factory installed oil filters. Engines with auxiliary oil filters will require additional oil. Refer to the OEM specifications for the capacity of the auxiliary oil filter.

Cooling System

To maintain the cooling system, the Total Cooling System capacity must be known. The approximate capacity for the engine cooling system is listed below. External System capacities will vary among applications. Refer to the OEM specifications for the External System capacity. This capacity information will be needed to determine the amount of coolant/antifreeze that is required for the Total Cooling System.

1103 Engine

Table 7

1103 Naturally Aspirated Engine without an oil cooler		
Compartment or System	**Liters**	**Quarts**
Engine Only	6.3	6.7
External cooling system capacity (OEM recommendation) (1)		
Total Cooling System (2)		
Total cooling system capacity for engine model DD and engine model DJ with factory fitted radiators.	12.8	13.5

(1) The external cooling system includes a radiator or an expansion tank with the following components: heat exchanger, aftercooler, and piping. Refer to the OEM specifications. Enter the value for the external system capacity in this row.
(2) The Total Cooling System includes the capacity for the engine cooling system plus the capacity for the external cooling system. Enter the total in this row.

Table 8

1103 Naturally Aspirated Engines and Turbocharged Engines with an oil cooler		
Compartment or System	**Liters**	**Quarts**
Engine Only	6.5	6.9
External cooling system capacity (OEM recommendation) (1)		
Total Cooling System (2)		
Total cooling system capacity for engine model DK with factory fitted radiators.	13	13.7

(1) The external cooling system includes a radiator or an expansion tank with the following components: heat exchanger, aftercooler, and piping. Refer to the OEM specifications. Enter the value for the external system capacity in this row.
(2) The Total Cooling System includes the capacity for the engine cooling system plus the capacity for the external cooling system. Enter the total in this row.

1104 Engine

Table 9

1104 Naturally Aspirated Engine		
Compartment or System	**Liters**	**Quarts**
Engine Only	10.4	11
External cooling system capacity (OEM recommendation) (1)		
Total Cooling System (2)		

(1) The external cooling system includes a radiator or an expansion tank with the following components: heat exchanger, aftercooler, and piping. Refer to the OEM specifications. Enter the value for the external system capacity in this row.
(2) The Total Cooling System includes the capacity for the engine cooling system plus the capacity for the external cooling system. Enter the total in this row.

Table 10

1104 Turbocharged Engine		
Compartment or System	**Liters**	**Quarts**
Engine Only	11.4	12
External cooling System capacity (OEM recommendation) (1)		
Total Cooling System (2)		

(1) The external cooling system includes a radiator or an expansion tank with the following components: heat exchanger, aftercooler, and piping. Refer to the OEM specifications. Enter the value for the external cooling system capacity in this row.
(2) The Total Cooling System includes the capacity for the engine cooling system plus the capacity for the external cooling system. Enter the total in this row.

i05899596

Fluid Recommendations

General Lubricant Information

Because of government regulations regarding the certification of exhaust emissions from the engine, the lubricant recommendations must be followed.

American Petroleum Institute (API) Oils

The Engine Oil Licensing and Certification System by the American Petroleum Institute (API) is recognized by Perkins. For detailed information about this system, see the latest edition of the “API publication No. 1509”. Engine oils that bear the API symbol are authorized by API.

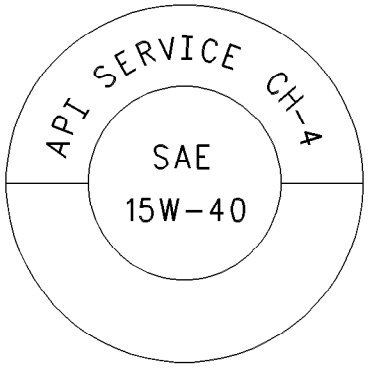

Illustration 28 g00546535
Typical API symbol

Table 11

API Classifications for the Industrial Engine
Oil Specification
CH-4 minimum specification CI-4

Terminology

Certain abbreviations follow the nomenclature of “SAE J754”. Some classifications follow “SAE J183” abbreviations. In addition to Perkins definitions, there are other definitions that will be of assistance in purchasing lubricants. Recommended oil viscosities can be found in this publication, “Fluid Recommendations/Engine Oil” topic (Maintenance Section).

Engine Oil

Commercial Oils

The performance of commercial diesel engine oils is based on American Petroleum Institute (API) classifications. These API classifications are developed in order to provide commercial lubricants for a broad range of diesel engines that operate at various conditions.

Only use commercial oils that meet the following classifications:

- API CH-4 minimum multigrade oil
- API CI-4
- ACEAE3

In order to make the correct choice of a commercial oil, refer to the following explanations:

API CH-4 – API CH-4 oils were developed in order to meet the requirements of the new high performance diesel engines. Also, the oil was designed to meet the requirements of the low emissions diesel

engines. API CH-4 oils are also acceptable for use in older diesel engines and in diesel engines that use high sulfur diesel fuel.

Three new engine tests were developed for the API CH-4 oil. The first test specifically evaluates deposits on pistons for engines with the two-piece steel piston. This test (piston deposit) also measures the control of oil consumption. A second test is conducted with moderate oil soot. The second test measures the following criteria: wear of piston rings, wear of cylinder liners and resistance to corrosion. A third new test measures the following characteristics with high levels of soot in the oil: wear of the valve train, resistance of the oil in plugging the oil filter and control of sludge.

In addition to the new tests, API CH-4 oils have tougher limits for viscosity control in applications that generate high soot. The oils also have improved oxidation resistance. API CH-4 oils must pass an additional test (piston deposit) for engines that use aluminum pistons (single piece). Oil performance is also established for engines that operate in areas with high sulfur diesel fuel.

All of these improvements allow the API CH-4 oil to achieve optimum oil change intervals. API CH-4 oils are recommended for use in extended oil change intervals. API CH-4 oils are recommended for conditions that demand a premium oil. Your Perkins distributor has specific guidelines for optimizing oil change intervals.

Some commercial oils that meet the API classifications may require reduced oil change intervals. To determine the oil change interval, closely monitor the condition of the oil and perform a wear metal analysis.

An oil specification that is above CH-4 is acceptable for use in Perkins engines.

NOTICE
Failure to follow these oil recommendations can cause shortened engine service life due to deposits and/or excessive wear.

Total Base Number (TBN) and Fuel Sulfur Levels for Direct Injection (DI) Diesel Engines

The Total Base Number (TBN) for an oil depends on the fuel sulfur level. For direct injection engines that use distillate fuel, the minimum TBN of the new oil must be ten times the fuel sulfur level. The TBN is defined by “ASTM D2896”. The minimum TBN of the oil is 5 regardless of fuel sulfur level. Illustration 29 demonstrates the TBN.

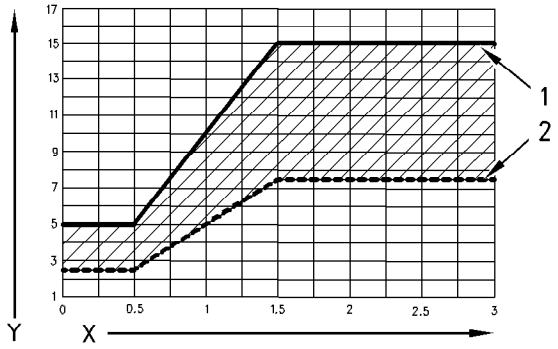

Illustration 29 g00799818

(Y) TBN by “ASTM D2896”
(X) Percentage of fuel sulfur by weight
(1) TBN of new oil
(2) Change the oil when the TBN deteriorates to 50 percent of the original TBN.

Use the following guidelines for fuel sulfur levels that exceed 1.5 percent:

- Choose an oil with the highest TBN that meets one of these classifications: API CH-4 and API CI-4.
- Reduce the oil change interval. Base the oil change interval on the oil analysis. Ensure that the oil analysis includes the condition of the oil and a wear metal analysis.

Excessive piston deposits can be produced by an oil with a high TBN. These deposits can lead to a loss of control of the oil consumption and to the polishing of the cylinder bore.

NOTICE
Operating Direct Injection (DI) diesel engines with fuel sulphur levels over 0.5 percent will require shortened oil change intervals. Shortened oil change intervals will help maintain adequate wear protection.

Table 12

Percentage of Sulfur in the fuel	Oil change interval
Lower than 0.5	Normal
0.5 to 1.0	0.75 of normal
Greater than 1.0	0.50 of normal

Lubricant Viscosity Recommendations for Direct Injection (DI) Diesel Engines

The correct SAE viscosity grade of oil is determined by the minimum ambient temperature during cold engine start-up, and the maximum ambient temperature during engine operation.

Refer to illustration30 (minimum temperature) in order to determine the required oil viscosity for starting a cold engine.

Refer to illustration 30 (maximum temperature) in order to select the oil viscosity for engine operation at the highest ambient temperature that is anticipated.

Generally, use the highest oil viscosity that is available to meet the requirement for the temperature at start-up.

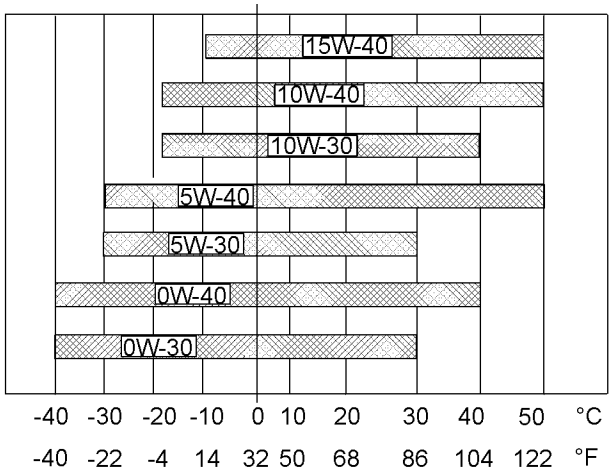

Illustration 30 g03329687

Synthetic Base Stock Oil

Synthetic base oils are acceptable for use in these engines if these oils meet the performance requirements that are specified for the engine.

Synthetic base oils generally perform better than conventional oils in the following two areas:

- Synthetic base oils have improved flow at low temperatures especially in arctic conditions.
- Synthetic base oils have improved oxidation stability especially at high operating temperatures.

Some synthetic base oils have performance characteristics that enhance the service life of the oil. Perkins does not recommend the automatic extending of the oil change intervals for any type of oil.

Re refined base stock oil

Re refined base stock oils are acceptable for use in Perkins engines if these oils meet the performance requirements that are specified by Perkins.Re refined base stock oil can be used exclusively in finished oil or in a combination with new base stock oil . The US military specifications and the specifications of other heavy equipment manufacturers also allow the use of re refined base stock oils that meet the same criteria.

The process that is used to make re refined base stock oil should adequately remove all wear metals that are in the used oil and all the additives that are in the used oil. The process that is used to make re refined base stock oil generally involves the process of vacuum distillation and hydrotreating the used oil. Filtering is adequate for the production of high quality, re refined base stock oil.

Lubricants for Cold Weather

When an engine is started and an engine is operated in ambient temperatures below −20 °C (−4 °F), use multigrade oils that are capable of flowing in low temperatures.

These oils have lubricant viscosity grades of SAE 0W or SAE 5W.

When an engine is started and operated in ambient temperatures below −30 °C (−22 °F), use a synthetic base stock multigrade oil with an 0W viscosity grade or with a 5W viscosity grade. Use an oil with a pour point that is lower than −50 °C (−58 °F).

The number of acceptable lubricants is limited in cold-weather conditions. Perkins recommends the following lubricants for use in cold-weather conditions:

First Choice – Use oil with an EMA DHD-1 Recommended Guideline. Use a CH-4 oil that has an API license. The oil should be either SAE 0W20, SAE 0W30, SAE 0W40, SAE 5W30, or SAE 5W40 lubricant viscosity grade.

Second Choice – Use an oil that has a CH-4 additive package. Although the oil has not been tested for the requirements of the API license, the oil must be either SAE 0W20, SAE 0W30, SAE 0W40, SAE 5W30, or SAE 5W40.

NOTICE
Shortened engine service life could result if second choice oils are used.

Aftermarket Oil Additives

Perkins does not recommend the use of aftermarket additives in oil. The use aftermarket additives in order to achieve the engines maximum service life, or rated performance is not necessary. Fully formulated, finished oils consist of base oils and of commercial additive packages. These additive packages are blended into the base oils at precise percentages in order to help provide finished oils with performance characteristics that meet industry standards.

There are no industry standard tests that evaluate the performance or the compatibility of aftermarket additives in finished oil. Aftermarket additives may not be compatible with the finished oils additive package, which could lower the performance of the finished oil. The aftermarket additive could fail to mix with the finished oil. An aftermarket additive could produce sludge in the crankcase. Perkins discourages the use of aftermarket additives in finished oils.

To achieve the best performance from a Perkins engine, conform to the following guidelines:

- Select the correct oil, or a commercial oil that meets the “EMA Recommended Guideline on Diesel Engine Oil” or the recommended API classification.
- See the appropriate “Lubricant Viscosities” table in order to find the correct oil viscosity grade for your engine.
- At the specified interval, service the engine. Use new oil and install a new oil filter.
- Perform maintenance at the intervals that are specified in the Operation and Maintenance Manual, “Maintenance Interval Schedule”.

Oil Analysis

Some engines may be equipped with an oil sampling valve. If oil analysis is required, the oil sampling valve is used to obtain samples of the engine oil. The oil analysis will complement the preventive maintenance program.

The oil analysis is a diagnostic tool that is used to determine oil performance and component wear rates. Contamination can be identified and measured by using the oil analysis. The oil analysis includes the following tests:

- The Wear Rate Analysis monitors the wear of the engines metals. The amount of wear metal and type of wear metal that is in the oil is analyzed. The increase in the rate of engine wear metal in the oil is as important as the quantity of engine wear metal in the oil.
- Tests are conducted in order to detect contamination of the oil by water, glycol, or fuel.
- The Oil Condition Analysis determines the loss of the oils lubricating properties. An infrared analysis is used to compare the properties of new oil to the properties of the used oil sample. This analysis allows technicians to determine the amount of deterioration of the oil during use. This analysis also allows technicians to verify the performance of the oil according to the specification during the entire oil change interval.

i05899601

Fluid Recommendations
(Fuel Recommendations)

- **Glossary**
- ISO International Standards Organization
- ASTM American Society for Testing and Materials
- HFRR High Frequency Reciprocating Rig for Lubricity testing of diesel fuels
- FAME Fatty Acid Methyl Esters
- CFR Co-ordinating Fuel Research
- LSD Low Sulfur Diesel
- ULSD Ultra Low Sulfur Diesel
- RME Rape Methyl Ester
- SME Soy Methyl Ester
- EPA Environmental Protection Agency of the United States

General Information

NOTICE
Every attempt is made to provide accurate, up-to-date information. By use of this document you agree that Perkins Engines Company Limited is not responsible for errors or omissions.

NOTICE
These recommendations are subject to change without notice. Contact your local Perkins distributor for the most up-to-date recommendations.

Diesel Fuel Requirements

Perkins is not in a position to evaluate continuously and monitor all worldwide distillate diesel fuel specifications that are published by governments and technological societies.

Table 13 provides a known reliable baseline in order to judge the expected performance of distillate diesel fuels that are derived from conventional sources.

Satisfactory engine performance is dependent on the use of a good quality fuel. The use of a good quality fuel will give the following results: long engine life and acceptable exhaust emissions levels. The fuel must meet the minimum requirements that are stated in table 13 .

NOTICE
The footnotes are a key part of the Perkins Specification for Distillate Diesel Fuel Table. Read ALL of the footnotes.

Table 13

Perkins Specification for Distillate Diesel Fuel				
Property	**UNITS**	**Requirements**	**“ASTM Test”**	**“ISO Test”**
Aromatics	%Volume	35% maximum	D1319	“ISO 3837”
Ash	%Weight	0.01% maximum	D482	“ISO 6245”
Carbon Residue on 10% Bottoms	%Weight	0.35% maximum	D524	“ISO 4262”
Cetane Number (1)	-	40 minimum	D613 or D6890	“ISO 5165”
Cloud Point	°C	The cloud point must not exceed the lowest expected ambient temperature.	D2500	“ISO 3015”
Copper Strip Corrosion	-	No. 3 maximum	D130	“ISO 2160”
Distillation	°C	10% at 282 °C (539.6 °F) maximum	D86	“ISO 3405”
		90% at 360 °C (680 °F) maximum		
Density at 15 °C (59 °F) (2)	Kg / M ^{3}	800 minimum and 860 maximum	No equivalent test	“ISO 3675 ” or “ISO 12185”
Flash Point	°C	legal limit	D93	“ISO 2719”
Thermal Stability	-	Minimum of 80% reflectance after aging for 180 minutes at 150 °C (302 °F)	D6468	No equivalent test

(continued)

(Table 13, contd)

Pour Point	°C	6 °C (10°F) Minimum below ambient temperature	D97	“ISO 3016”
Sulfur	%mass	(3)	D5453 or /D26222	“ISO 20846 ” or “ISO 20884”
Kinematic Viscosity (4)	“MM”2“/S (cSt)”	The viscosity of the fuel that is delivered to the fuel injection pump. “1.4 minimum and /4.5 maximum”	D445	“ISO 3405”
Water and sediment	% weight	0.05% maximum	D1796	“ISO 3734”
Water	% weight	0.05% maximum	D1744	No equivalent test
Sediment	% weight	0.05% maximum	D473	“ISO 3735”
Gums and Resins (5)	mg/100mL	10 mg per 100 mL maximum	D381	“ISO 6246”
Lubricity corrected wear scar diameter at 60 °C (140 °F). (6)	mm	0.46 maximum	D6079	“ISO 12156-1”
Fuel cleanliness (7)	-	“ISO”18/16/13	7619	“ISO 4406”

(1) In order to insure minimum cetane number of 40 a distillate diesel fuel should have minimum cetane index of 44 when ASTM D4737 test method is used. A fuel with a higher cetane number is recommended in order to operate at a higher altitude or in cold weather.
(2) Density range allowed includes summer and winter diesel fuel grades. Fuel density varies depending on the sulfur level where high sulfur fuels have higher densities. Some unblended alternative fuels have lower densities which are acceptable, if all the other properties meet this specification.
(3) Regional regulations, national regulations, or international regulations can require a fuel with a specific sulfur limit. Consult all applicable regulations before selecting a fuel for a given engine application. Perkins fuel systems and engine components can operate on high sulphur fuels where allowed by legislation. Fuel sulfur levels affect exhaust emissions. High sulfur fuels also increase the potential for corrosion of internal components. Fuel sulfur levels above 0.5% may significantly shorten the oil change interval. For additional information, refer to **General lubricant Information**.
(4) The values of the fuel viscosity are the values as the fuel is delivered to the fuel injection pumps. Fuel should also meet the minimum viscosity requirement and the fuel should meet the maximum viscosity requirements at 40° C (104° F) of either the "ASTM D445" test method or the "ISO 3104" test method. If a fuel with a low viscosity is used, cooling of the fuel may be required to maintain 1.4 cSt or greater viscosity at the fuel injection pump. Fuels with a high viscosity might require fuel heaters in order to lower the viscosity to 4.5 cSt at the fuel injection pump.
(5) Follow the test conditions and procedures for gasoline (motor).
(6) The lubricity of a fuel is a concern with low sulfur and ultra low sulfur fuel. To determine the lubricity of the fuel, use the “ISO 12156-1 or ASTM D6079 High Frequency Reciprocating Rig (HFRR)” test. If the lubricity of a fuel does not meet the minimum requirements, consult your fuel supplier. Do not treat the fuel without consulting the fuel supplier. Some additives are not compatible. These additives can cause problems in the fuel system.
(7) Recommended cleanliness level for fuel as dispensed into machine or engine fuel tank is "ISO 18/16/13 or cleaner as per ISO 4406. Refer to the "Contamination Control Recommendations for Fuels" in this chapter.

NOTICE

Operating with fuels that do not meet the Perkins recommendations can cause the following effects: Starting difficulty, poor combustion, deposits in the fuel injectors, reduced service life of the fuel system, deposits in the combustion chamber and reduced service life of the engine.

Engines that are manufactured by Perkins are certified with the fuel that is prescribed by the United States Environmental Protection Agency. Engines that are manufactured by Perkins are certified with the fuel that is prescribed by the European Certification and other regulatory agencies. Perkins does not certify diesel engines on any other fuel.

Note: The owner and the operator of the engine has the responsibility of using the fuel that is prescribed by the Environmental Protection Agency (EPA) and other appropriate regulatory agencies.

Diesel Fuel Characteristics

Perkins Recommendations

Cetane Number

Fuel that has a high cetane number will give a shorter ignition delay. A high cetane number will produce a better ignition quality. Cetane numbers are derived for fuels against proportions of cetane and heptamethylnonane in the standard CFR engine. Refer to “ISO 5165” for the test method.

Cetane numbers in excess of 45 are normally expected from current diesel fuel. However, a cetane number of 40 may be experienced in some territories. The United States of America is one of the territories that can have a low cetane value. A minimum cetane value of 40 is required during average starting conditions. A higher cetane value may be required for operations at high altitudes or in cold-weather operations.

Fuel with a low cetane number can be the root cause of problems during cold start.

Viscosity

Viscosity is the property of a liquid of offering resistance to shear or flow. Viscosity decreases with increasing temperature. This decrease in viscosity follows a logarithmic relationship for normal fossil fuel. The common reference is to kinematic viscosity. Kinematic viscosity is the quotient of the dynamic viscosity that is divided by the density. The determination of kinematic viscosity is normally by readings from gravity flow viscometers at standard temperatures. Refer to “ISO 3104” for the test method.

The viscosity of the fuel is significant because fuel serves as a lubricant for the fuel system components. Fuel must have sufficient viscosity in order to lubricate the fuel system in both cold temperatures and hot temperatures. If the kinematic viscosity of the fuel is lower than 1.4 cSt at the fuel injection pump, damage to the fuel injection pump can occur. This damage can be excessive scuffing and seizure. Low viscosity may lead to difficult hot restarting, stalling, and loss of performance. High viscosity may result in seizure of the pump.

Perkins recommends kinematic viscosities of 1.4 and 4.5 cSt that is delivered to the fuel injection pump. If a fuel with a low viscosity is used, cooling of the fuel may be required to maintain 1.4 cSt or greater viscosity at the fuel injection pump. Fuels with a high viscosity might require fuel heaters in order to lower the viscosity to 4.5 cSt at the fuel injection pump.

Density

Density is the mass of the fuel per unit volume at a specific temperature. This parameter has a direct influence on engine performance and a direct influence on emissions. This influence determines the heat output from a given injected volume of fuel. This parameter is quoted in the following kg/m at 15 °C (59 °F).

Perkins recommends a value of density of 841 kg/m in order to obtain the correct power output. Lighter fuels are acceptable but these fuels will not produce the rated power.

Sulfur

The level of sulfur is governed by emissions legislations. Regional regulation, national regulations, or international regulations can require a fuel with a specific sulfur limit. The sulfur content of the fuel and the fuel quality must comply with all existing local regulations for emissions.

LSD fuel 0.05 percent (≤ 15 ppm (mg/kg)) sulfur is strongly recommended for use in these engine models.

ULSD and sulphur fuel diesel fuels are acceptable to use in all engine models. The lubricity of these fuels must not exceed wear scar diameter of 0.46 mm (0.01811 inch) as per “ISO 12156-1”. Refer to “Lubricity” for more information. Fuels with sulphur content higher than 0.05 percent (500 PPM) can be used where allowed by legislation.

In some parts of the world and for some applications, high sulfur fuels above 0.5% by mass might only be available. Fuel with a high sulfur content can cause engine wear. High sulfur fuel will have a negative impact on emissions of particulates. High sulfur fuel can be used if the local emissions legislation will allow the use. High sulfur fuel can be used in countries that do not regulate emissions.

When only high sulfur fuels are available, the use of high alkaline lubricating oil may be required. Or that the lubricating oil change interval is reduced. Refer to Operation and Maintenance Manual, “Fluid Recommendations (Lubricant Information)” for information on sulfur in fuel.

Lubricity

Lubricity is the capability of the fuel to prevent pump wear. The lubricity of the fluid describes the ability of the fluid to reduce the friction between surfaces that are under load. This ability reduces the damage that is caused by friction. Fuel injection systems rely on the lubricating properties of the fuel. Until fuel sulfur limits were mandated, the lubricity of the fuel was believed to be a function of fuel viscosity.

The lubricity has particular significance to the current low viscosity fuel, low sulfur fuel, and low aromatic fossil fuel. These fuels are made in order to meet stringent exhaust emissions.

The lubricity of these fuels must not exceed wear scar diameter of 0.46 mm (0.01811 inch). The fuel lubricity test must be performed on an HFRR, operated at 60 °C (140 °F). Refer to “ISO 12156-1 ”.

NOTICE

The fuels system has been qualified with fuel having lubricity up to 0.46 mm (0.01811 inch) wear scar diameter as tested by “ISO 12156-1 ”. Fuel with higher wear scar diameter than 0.46 mm (0.01811 inch) will lead to reduced service life and premature failure of the fuel system.

In case of the fuels which do not meet specified lubricity requirement appropriate lubricity additive can be used to enhance the lubricity of the fuel. UMK8276 Perkins Diesel Fuel Conditioner is the approved additive refer to “Perkins Diesel Fuel Conditioner, and Perkins”.

Contact your fuel supplier for those circumstances when fuel additives are required. Your fuel supplier can make recommendations for additives to use and for the proper level of treatment.

Distillation

Distillation will give an indication of the mixture of different hydrocarbons in the fuel. A high ratio of light weight hydrocarbons can affect the characteristics of combustion.

Classification of the Fuels

Diesel engines have an ability to burn wide variety of fuels. Below is a list of typically encountered fuel specifications that have been assessed as to their acceptability and are divided into following categories:

Group 1: Preferred Fuels

The following fuel specifications are considered acceptable.

- Fuels that meet the requirements that are listed in the table 13 .
- “EN590 - Grades A to F and class 0 to 4”
- “ASTM D975 Grade No. 1-D and 2-D”
- “JIS K2204 Grades 1, 2 & 3 & Special Grade 3” acceptable provided lubricity ware scar diameter does not exceed of 0.46 mm (0.01811 inch) as per “ISO 12156-1” .
- “BS2869 - Class A2 Off Highway Gas Oil, Red Diesel”

Note: The lubricity of these fuels must not exceed wear scar diameter of 0.46 mm (0.01811 inch) as per “ISO 12156-1” . Refer to “Lubricity”.

Group 2: Aviation Kerosene Fuels

Following kerosene and jet fuel specifications are acceptable alternative fuels, and may be used on a contingency base for emergency or continuous use, where standard diesel fuel is not available and where legislation allows their use:

- “MIL-DTL-83133 NATO F34 (JP-8)”
- “MIL-DTL-83133 NATO F35”
- “MIL-DTL-5624 NATO F44 (JP-5)”
- “MIL-DTL-38219 (USAF) (JP7)”
- “NATO XF63”
- “ASTM D1655 JET A”
- “ASTM D1655 JET A1”

NOTICE
These fuels are only acceptable when used with appropriate lubricity additive and must meet minimum requirements that are listed in table 13 . The lubricity of these fuels must not exceed wear scar diameter of 0.46 mm (0.01811 inch) as per “ISO 12156-1” . Refer to “Lubricity”.

Note: Minimum cetane number of 40 is recommended otherwise cold starting problems or light load misfire might occur. Since jet fuel specifications do not mention cetane requirements, Perkins recommends that a fuel sample is taken to determine the cetane number.

Note: Fuels must have minimum viscosity of 1.4 cSt delivered to the fuel injection pump. Cooling of the fuel may be required to maintain 1.4 cSt or greater viscosity at the fuel injection pump. Perkins recommends that the actual viscosity of the fuel, be measured in order to determine if a fuel cooler is needed. Refer to “Viscosity”.

Note: Rated power loss of up to 10 percent is possible due to lower density and lower viscosity of jet fuels compared to diesel fuels.

Biodiesel Fuel

Biodiesel is a fuel that can be defined as mono-alkyl esters of fatty acids. Biodiesel is a fuel that can be made from various feedstock. The most commonly available biodiesel in Europe is Rape Methyl Ester (REM). This biodiesel is derived from rapeseed oil. Soy Methyl Ester (SME) is the most common biodiesel in the United States. This biodiesel is derived from soybean oil. Soybean oil or rapeseed oil are the primary feedstocks. These fuels are together known as Fatty Acid Methyl Esters (FAME).

Raw pressed vegetable oils are NOT acceptable for use as a fuel in any concentration in compression engines. Without esterification, these oils may gel in the crankcase and the fuel tank. These fuels may not be compatible with many of the elastomers that are used in engines that are manufactured today. In original forms, these oils are not suitable for use as a fuel in compression engines. Alternate base stocks for biodiesel may include animal tallow, waste cooking oils, or various other feedstocks. In order to use any of the products that are listed as fuel, the oil must be esterified.

Fuel made of 100 percent FAME is generally referred to as B100 biodiesel or neat biodiesel. Biodiesel can be blended with distillate diesel fuel. Biodiesel blends are denoted as "BXX" with "XX" representing the content of neat biodiesel contained in the blend with mineral diesel fuel. For example (B5, B10, and B20). The most commonly available biodiesel blends are B5, which is 5 percent biodiesel and 95 percent distillate diesel fuel.

Note: The percentages given are volume-based. The U.S. distillate diesel fuel specification “ASTM D975-09a” includes up to B5 (5 percent) biodiesel.

European distillate diesel fuel specification “EN590:2010” includes up B7 (7 percent) biodiesel.

Note: Engines that are manufactured by Perkins are certified by use of the prescribed Environmental Protection Agency (EPA) and European Certification fuels. Perkins does not certify engines on any other fuel. The user of the engine has the responsibility of using the correct fuel that is recommended by the manufacturer and allowed by the EPA and other appropriate regulatory agencies.

Specification Requirements

The neat biodiesel must conform to “EN14214” or “ASTM D6751” (in the USA). Specification and can only be blended in mixture of up to 7% by volume in acceptable distillate diesel fuel. Distillate diesel fuel used for blending and the final biodiesel bled produced must meet requirements in table 13 . Or the latest edition of “EN590” or “ASTM D 975” commercial standards.

Higher blend than B7 have not been released for these engine models.

In North America biodiesel and biodiesel blends must be purchased from the BQ-9000 accredited producers and BQ-9000 certified distributors.

In other areas of the world, the use of biodiesel that is BQ-9000 accredited and certified, or that is accredited and certified by a comparable biodiesel quality body to meet similar biodiesel quality standards is required.

General Requirements

Biodiesel and biodiesel blends are known to cause an increase in fuel system deposits, most significant of which are deposits within the fuel injector. These deposits can cause a loss in power due to restricted or modified fuel injection or cause other functional issues associated with these deposits. Perkins T400012 Fuel Cleaner is most effective in cleaning and preventing the formation of deposits. Refer to “Perkins Diesel Fuel System Cleaner, and Perkins” for more information. Perkins UMK8276 Perkins Diesel Fuel Conditioner helps to limit deposit issues by improving the stability of biodiesel while also hindering the production of new deposits. For more information refer to “Perkins Diesel Fuel Conditioner, and Perkins”.

Diesel fuels blends with FAME are not recommended in applications that are infrequently used and may be stored for long periods. Examples are, standby generator sets and certain emergency vehicles. This recommendation is due to FAME having reduced oxidation stability compared to hydrocarbon diesel. Use of FAME can result in the formation of acids and solid precipitates.

If biodiesel must be used, then the quality of the fuel must be tested periodically. In particular the stability of the fuel must be tested and comply with EN 15751, commonly known as the Rancimat test.

Perkins strongly recommends that seasonally operated engines have the fuel systems, including fuel tanks, flushed with conventional diesel fuel before prolonged shutdown periods. An example of an application that should seasonally flush the fuel system is a combine harvester.

Microbial contamination and growth can cause corrosion in the fuel system and premature plugging of the fuel filter. Consult your supplier of fuel for assistance in selecting appropriate antimicrobial additive.

Water accelerates microbial contamination and growth. When biodiesel is compared to distillate fuels, water is naturally more likely to exist in the biodiesel. Ensure that you check frequently and if necessary, drain the water separator.

Materials such as brass, bronze, copper, led, tin, and zinc accelerate the oxidation process of the biodiesel fuel. The oxidation process can cause deposits formation therefore these materials must not be used for fuel tanks and fuel lines.

Fuel for Cold Weather Operation

The European standard “EN590” contains climate dependant requirements and a range of options. The options can be applied differently in each country. There are five classes that are given to arctic climates and severe winter climates. 0, 1, 2, 3 and 4.

Fuel that complies with “EN590” CLASS 4 can be used at temperatures as low as −44 °C (−47.2 °F). Refer to “EN590” for a detailed discretion of the physical properties of the fuel.

The diesel fuel “ASTM D975 1-D” used in the United States of America may be used in cold temperatures that are below −18 °C (−0.4 °F).

In extreme cold ambient conditions, you may also use Aviation, kerosene fuels specified in “Group 2: Aviation Kerosene Fuels”. These fuels are intended to be used in temperatures that can be as low as −54 °C (−65.2 °F). for more information, refer to “Group 2: Aviation Kerosene Fuels”for detail and conditions of use of the aviation kerosene fuels.

Aftermarket Fuel Additives

NOTICE

Perkins does not warrant the quality or performance of non-Perkins fluids and filters.

When auxiliary devices, accessories, or consumables (filters, additives) which are made by other manufacturers are used on Perkins products, the Perkins warranty is not affected simply because of such use.

However, failures that result from the installation or use of other manufacturers devices, accessories, or consumables are NOT Perkins defects. Therefore, the defects are NOT covered under the Perkins warranty.

Supplemental diesel fuel additives are not recommended and is due to potential damage to the fuel system or the engine. Your fuel supplier or the fuel manufacturer will add the appropriate supplemental diesel fuel additives.

Perkins recognizes the fact that additives may be required in some special circumstances. Fuel additives need to be used with caution. Contact your fuel supplier for those circumstances when fuel additives are required. Your fuel supplier can recommend the appropriate fuel additive and the correct level of treatment.

Note: For the best results, your fuel supplier should treat the fuel when additives are required. The treated fuel must meet the requirements that are stated in table 13 .

Perkins Diesel Fuel System Cleaner

Perkins T400012 Fuel Cleaner is the only fuel cleaner that is recommended by Perkins.

If biodiesel or biodiesel blends of fuel are to be used, Perkins require the use of Perkins fuel cleaner. For more information on the use of biodiesel and biodiesel blends refer to “Biodiesel Fuel”.

Perkins fuel cleaner will remove deposits that can form in the fuel system with the use of biodiesel and biodiesel blends. These deposits can create a loss of power and engine performance.

Once the fuel cleaner has been added to the fuel, the deposits within the fuel system are removed after 30 hours of engine operation. For maximum results, continue to use the fuel cleaner for up to 80 hours. Perkins fuel cleaner can be used on an on-going basis with no adverse impact on engine or fuel system durability.

Detailed instructions on the rate of which the fuel cleaner must be use are on the container.

Perkins Diesel Fuel Conditioner

The UMK8276 Perkins Diesel Fuel Conditioner can be used in the industrial engines that are associated with this manual. The diesel fuel conditioner is a proprietary metal and ash free formulation that has been extensively tested for use with distillate diesel fuels for use in Perkins diesel engines. The diesel fuel conditioner helps address many of the challenges that various fuels worldwide present in regards to fuel life/stability, engine startability, injector deposits, fuel system life, and long-term engine performance.

Note: Diesel fuel additives/conditioners may not improve markedly poor diesel fuel properties enough to make poor diesel acceptable for use.

Diesel fuel conditioner is a proven high performance, multipurpose diesel fuel conditioner that is designed to improve:

- Fuel economy (through fuel system cleanup)
- Lubricity
- Oxidation stability
- Detergency/dispersancy
- Moisture dispersancy
- Corrosion protection
- Cetane (typically 2-3 cetane numbers)

The diesel fuel conditioner also reduces the formation of gums, resins, and sludge, and disperses insoluble gums.

For maximum overall benefits, ask your fuel supplier to add the fuel conditioner at the recommended treat rate before fuel delivery. Or you may add the fuel conditioner at the recommended treat rate during the early weeks of fuel storage.

Contamination Control Recommendations for Fuels

Fuels of “ISO 18/16/13” cleanliness level or cleaner as dispensed into the engine or application fuel tank should be used. Reduce power loss, failures, and related down time of engines will result. This cleanliness level is important for new fuel system designs such as common rail injection systems and unit injection systems. Injection system designs utilize higher fuel pressures and tight clearances between moving parts in order to meet required stringent emissions regulations. Peak injection pressures in current fuel injection systems may exceed 30,000 psi. Clearances in these systems are less than 5 µm. As a result, particle contaminants as small as 4 µm can cause scoring and scratching of internal pump and injector surfaces and of injector nozzles.

Water in the fuel causes cavitation, corrosion of fuel system parts, and provides an environment where microbial growth in the fuel can flourish. Other sources of fuel contamination are soaps, gels, or other compounds that may result from undesirable chemical interactions in the fuels, particularly in ULSD. Gels and other compounds can also form in biodiesel fuel at low temperatures or if biodiesel is stored for extended periods. The best indication of microbial contamination, fuel additives, or cold temperature gel is rapid filter plugging of bulk fuel filters or application fuel filters.

In order to reduce downtime due to contamination, follow these fuel maintenance guidelines.

- Use high-quality fuels per recommended and required specifications
- Fill fuel tanks with fuels of “ISO 18/16/13” cleanliness level or cleaner, in particular for engines with common rail and unit injection systems. When you refuel the tank, filter the fuel through a 4 µm absolute filter (Beta 4 = 75 up to 200) in order to reach the recommended cleanliness level. This filtration should be located at the device that dispenses the fuel to the fuel tank. In addition, filtration at the dispensing point should remove water to ensure that fuel is dispensed at 500 ppm water or less.
- Perkins recommends the use of bulk fuel filter / coalescer units which clean the fuel of both particulate contamination and water in a single pass.
- Ensure that you use Perkins Advanced Efficiency Fuel Filters. Change your fuel filters per recommended service requirements or as needed.
- Drain your water separators daily .
- Drain your fuel tanks of sediment and water per the Operation and Maintenance Manual instructions.
- Install and maintain a properly designed bulk filter / coalescer filtration system. Continuous bulk filtration systems may be required to ensure that dispensed fuel meets the cleanliness target. Consult your Perkins distributor for availability of bulk filtration products.
- Centrifugal filters may need to be used as a pre-filter with fuel that is severely contaminated with gross amounts of water and/or large particulate contaminants. Centrifugal filters can effectively remove large contaminants, but may not be able to remove the small abrasive particles required to achieve the recommended “ISO” cleanliness level. Bulk filter / coalescers are necessary as a final filter in order to achieve the recommended cleanliness level.
- Install desiccant type breathers of 4 µm or less absolute efficiency with the ability to remove water on bulk storage tanks.
- Follow proper practices of fuel transportation. Filtration from the storage tank to the application promotes the delivery of clean fuel. Fuel filtration can be installed at each transport stage in order to keep the fuel clean.
- Cover, protect, and ensure cleanliness of all connection hoses, fittings, and dispensing nozzles.

Consult your local Perkins distributor for additional information on Perkins designed and produced filtration products.

i05899606

Fluid Recommendations

General Coolant Information

NOTICE
Never add coolant to an overheated engine. Engine damage could result. Allow the engine to cool first.

NOTICE
If the engine is to be stored in, or shipped to an area with below freezing temperatures, the cooling system must be either protected to the lowest outside temperature or drained completely to prevent damage.

NOTICE
Frequently check the specific gravity of the coolant for proper freeze protection or for anti-boil protection.

Clean the cooling system for the following reasons:

- Contamination of the cooling system
- Overheating of the engine
- Foaming of the coolant

NOTICE
Never operate an engine without water temperature regulators in the cooling system. Water temperature regulators help to maintain the engine coolant at the proper operating temperature. Cooling system problems can develop without water temperature regulators.

Many engine failures are related to the cooling system. The following problems are related to cooling system failures: Overheating, leakage of the water pump and plugged radiators or heat exchangers.

These failures can be avoided with correct cooling system maintenance. Cooling system maintenance is as important as maintenance of the fuel system and the lubrication system. Quality of the coolant is as important as the quality of the fuel and the lubricating oil.

Coolant is normally composed of three elements: Water, additives and glycol.

Water

Water is used in the cooling system in order to transfer heat.

Distilled water or deionized water is recommended for use in engine cooling systems.

DO NOT use the following types of water in cooling systems: Hard water, softened water that has been conditioned with salt and sea water.

If distilled water or deionized water is not available, use water with the properties that are listed in Table 14 .

Table 14

Acceptable Water	
Property	**Maximum Limit**
Chloride (Cl)	40 mg/L
Sulfate (SO_4)	100 mg/L
Total Hardness	170 mg/L
Total Solids	340 mg/L
Acidity	pH of 5.5 to 9.0

For a water analysis, consult one of the following sources:

- Local water utility company
- Agricultural agent
- Independent laboratory

Additives

Additives help to protect the metal surfaces of the cooling system. A lack of coolant additives or insufficient amounts of additives enable the following conditions to occur:

- Corrosion
- Formation of mineral deposits
- Rust
- Scale
- Foaming of the coolant

Many additives are depleted during engine operation. These additives must be replaced periodically.

Additives must be added at the correct concentration. Over concentration of additives can cause the inhibitors to drop out-of-solution. The deposits can enable the following problems to occur:

- Formation of gel compounds
- Reduction of heat transfer
- Leakage of the water pump seal
- Plugging of radiators, coolers, and small passages

Glycol

Glycol in the coolant helps to provide protection against the following conditions:

- Boiling
- Freezing

- Cavitation of the water pump

For optimum performance, Perkins recommends a 1:1 mixture of a water/glycol solution.

Note: Use a mixture that will provide protection against the lowest ambient temperature.

Note: 100 percent pure glycol will freeze at a temperature of −13 °C (8.6 °F).

Most conventional antifreezes use ethylene glycol. Propylene glycol may also be used. In a 1:1 mixture with water, ethylene and propylene glycol provide similar protection against freezing and boiling. Refer to Table 15 and refer to table 16 .

Table 15

Ethylene Glycol	
Concentration	**Freeze Protection**
50 Percent	−36 °C (−33 °F)
60 Percent	−51 °C (−60 °F)

NOTICE
Do not use propylene glycol in concentrations that exceed 50 percent glycol because of the reduced heat transfer capability of propylene glycol. Use ethylene glycol in conditions that require additional protection against boiling or freezing.

Table 16

Propylene Glycol	
Concentration	**Freeze Protection**
50 Percent	−29 °C (−20 °F)

To check the concentration of glycol in the coolant, measure the specific gravity of the coolant.

Coolant Recommendations

- ELC_____Extended Life Coolant
- SCA_____Supplement Coolant Additive
- ASTM_____American Society for Testing and Materials

The following two coolants are used in Perkins diesel engines:

Preferred – Perkins ELC

Acceptable – A commercial heavy-duty antifreeze that meets “ASTM D6210 ” specifications

Adequate – A commercial heavy-duty antifreeze that meets “ASTM D4985 ” specifications. Must be replaced after 1 year.

NOTICE
Do not use a commercial coolant/antifreeze that only meets the ASTM D3306 specification. This type of coolant/antifreeze is made for light automotive applications.

Perkins recommends a 1:1 mixture of water and glycol. This mixture of water and glycol will provide optimum heavy-duty performance as an antifreeze. This ratio may be increased to 1:2 water to glycol if extra freezing protection is required.

A mixture of SCA inhibitor and water is acceptable but will not give the same level of corrosion, boiling and, freezing protection as ELC. Perkins recommends a 6 percent to 8 percent concentration of SCA in those cooling systems. Distilled water or deionized water is preferred. Water which has the recommended properties may be used.

Table 17

Coolant Service Life	
Coolant Type	**Service Life** (1)
Perkins ELC	6,000 Service Hours or Three Years
Commercial Heavy-Duty Anti-freeze that meets “ASTM D6210”	3000 Service Hours or Two Year
Commercial Heavy-Duty Anti-freeze that meets “ASTM D4985”	3000 Service Hours or One Year
Commercial SCA inhibitor and Water	3000 Service Hours or One Year

(1) Use the interval that occurs first. The cooling system must also be flushed out at this time.

ELC

Perkins provides ELC for use in the following applications:

- Heavy-duty spark ignited gas engines
- Heavy-duty diesel engines
- Automotive applications

The anti-corrosion package for ELC is different from the anti-corrosion package for other coolants. ELC is an ethylene glycol base coolant. However, ELC contains organic corrosion inhibitors and antifoam agents with low amounts of nitrite. Perkins ELC has been formulated with the correct amount of these additives in order to provide superior corrosion protection for all metals in engine cooling systems.

ELC is available in a premixed cooling solution with distilled water. ELC is a 1:1 mixture. The Premixed ELC provides freeze protection to −36 °C (−33 °F). The Premixed ELC is recommended for the initial fill of the cooling system. The Premixed ELC is also recommended for topping off the cooling system.

Containers of several sizes are available. Consult your Perkins distributor for the part numbers.

ELC Cooling System Maintenance

Correct additions to the Extended Life Coolant

NOTICE
Use only Perkins products for pre-mixed or concentrated coolants.

Mixing Extended Life Coolant with other products reduces the Extended Life Coolant service life. Failure to follow the recommendations can reduce cooling system components life unless appropriate corrective action is performed.

In order to maintain the correct balance between the antifreeze and the additives, maintain the recommended concentration of ELC. Lowering the proportion of antifreeze lowers the proportion of additive. This action will lower the ability of the coolant to protect the system from pitting, from cavitation, from erosion, and from deposits.

NOTICE
Do not use a conventional coolant to top-off a cooling system that is filled with Extended Life Coolant (ELC).

Do not use standard supplemental coolant additive (SCA).

When using Perkins ELC, do not use standard SCA's or SCA filters.

ELC Cooling System Cleaning

Note: If the cooling system is already using ELC, cleaning agents are not required. Cleaning agents are only required if the system has been contaminated by the addition of some other type of coolant or by cooling system damage.

Clean water is the only cleaning agent that is required when ELC is drained from the cooling system.

Before the cooling system is filled, the heater control (if equipped) must be set to the HOT position. Refer to the OEM in order to set the heater control. After the cooling system is drained and the cooling system is refilled, operate the engine until the coolant level reaches the normal operating temperature and until the coolant level stabilizes. As needed, add the coolant mixture in order to fill the system to the specified level.

Changing to Perkins ELC

To change from heavy-duty antifreeze to the Perkins ELC, perform the following steps:

NOTICE
Care must be taken to ensure that all fluids are contained during performance of inspection, maintenance, testing, adjusting and the repair of the product. Be prepared to collect the fluid with suitable containers before opening any compartment or disassembling any component containing fluids.

Dispose of all fluids according to local regulations and mandates.

1. Drain the coolant into a suitable container.
2. Dispose of the coolant according to local regulations.
3. Flush the system with clean water in order to remove any debris.
4. Use an appropriate cleaner to clean the system. Follow the instruction on the label.
5. Drain the cleaner into a suitable container. Flush the cooling system with clean water.
6. Fill the cooling system with clean water and operate the engine until the engine is warmed to 49° to 66°C (120° to 150°F).

NOTICE
Incorrect or incomplete flushing of the cooling system can result in damage to copper and other metal components.

To avoid damage to the cooling system, make sure to flush completely the cooling system with clear water. Continue to flush the system until all the signs of the cleaning agent are gone.

7. Drain the cooling system into a suitable container and flush the cooling system with clean water.

Note: The cooling system cleaner must be thoroughly flushed from the cooling system. Cooling system cleaner that is left in the system will contaminate the coolant. The cleaner may also corrode the cooling system.

8. Repeat Steps 6 and repeat steps 7 until the system is completely clean.

9. Fill the cooling system with the Perkins Premixed ELC.

ELC Cooling System Contamination

NOTICE
Mixing ELC with other products reduces the effectiveness of the ELC and shortens the ELC service life. Use only Perkins Products for premixed or concentrate coolants. Failure to follow these recommendations can result in shortened cooling system component life.

ELC cooling systems can withstand contamination to a maximum of 10 percent of conventional heavy-duty antifreeze or SCA. If the contamination exceeds 10 percent of the total system capacity, perform ONE of the following procedures:

- Drain the cooling system into a suitable container. Dispose of the coolant according to local regulations. Flush the system with clean water. Fill the system with the Perkins ELC.
- Drain a portion of the cooling system into a suitable container according to local regulations. Then, fill the cooling system with premixed ELC. This procedure should lower the contamination to less than 10 percent.
- Maintain the system as a conventional Heavy-Duty Coolant. Treat the system with an SCA. Change the coolant at the interval that is recommended for the conventional Heavy-Duty Coolant.

Commercial Heavy-Duty Antifreeze and SCA

NOTICE
Commercial Heavy-Duty Coolant which contains Amine as part of the corrosion protection system must not be used.

NOTICE
Never operate an engine without water temperature regulators in the cooling system. Water temperature regulators help to maintain the engine coolant at the correct operating temperature. Cooling system problems can develop without water temperature regulators.

Check the antifreeze (glycol concentration) in order to ensure adequate protection against boiling or freezing. Perkins recommends the use of a refractometer for checking the glycol concentration. A hydrometer should not be used.

Perkins engine cooling systems should be tested at 500 hour intervals for the concentration of SCA.

Additions of SCA are based on the results of the test. An SCA that is liquid may be needed at 500 hour intervals.

Adding the SCA to Heavy-Duty Coolant at the Initial Fill

Use the equation that is in Table 18 to determine the amount of SCA that is required when the cooling system is initially filled.

Table 18

Equation For Adding The SCA To The Heavy-Duty Coolant At The Initial Fill
V × 0.045 = X V is the total volume of the cooling system. X is the amount of SCA that is required.

Table 19 is an example for using the equation that is in Table 18 .

Table 19

Example Of The Equation For Adding The SCA To The Heavy-Duty Coolant At The Initial Fill		
Total Volume of the Cooling System (V)	**Multiplication Factor**	**Amount of SCA that is Required (X)**
15 L (4 US gal)	× 0.045	0.7 L (24 oz)

Adding The SCA to The Heavy-Duty Coolant For Maintenance

Heavy-duty antifreeze of all types REQUIRE periodic additions of an SCA.

Test the antifreeze periodically for the concentration of SCA. For the interval, refer to the Operation and Maintenance Manual, “Maintenance Interval Schedule” (Maintenance Section). Cooling System Supplemental Coolant Additive (SCA) Test/Add.

Additions of SCA are based on the results of the test. The size of the cooling system determines the amount of SCA that is needed.

Use the equation that is in Table 20 to determine the amount of SCA that is required, if necessary:

Table 20

Equation For Adding The SCA To The Heavy-Duty Coolant For Maintenance
V × 0.014 = X V is the total volume of the cooling system. X is the amount of SCA that is required.

Table 21 is an example for using the equation that is in Table 20 .

Table 21

Example Of The Equation For Adding The SCA To The Heavy-Duty Coolant For Maintenance		
Total Volume of the Cooling System (V)	**Multiplication Factor**	**Amount of SCA that is Required (X)**
15 L (4 US gal)	× 0.014	0.2 L (7 oz)

Cleaning the System of Heavy-Duty Antifreeze

- Clean the cooling system after used coolant is drained or before the cooling system is filled with new coolant.
- Clean the cooling system whenever the coolant is contaminated or whenever the coolant is foaming.

i11130417

Maintenance Interval Schedule

When Required

“ Battery - Replace“ 59
“ Battery or Battery Cable - Disconnect“ 60
“ Engine - Clean“ 66
“ Engine Air Cleaner Element (Dual Element) - Clean/Replace“ 66
“ Engine Air Cleaner Element (Single Element) - Inspect/Replace“ 68
“ Engine Oil Sample - Obtain“ 70
“ Fuel Injector - Test/Change“ 74
“ Fuel System - Prime“ 75
“ Severe Service Application - Check“ 87

Daily

“ Cooling System Coolant Level - Check“ 63
“ Driven Equipment - Check“ 66
“ Engine Air Cleaner Service Indicator - Inspect“ . . 69
“ Engine Oil Level - Check“ 70
“ Fuel System Primary Filter/Water Separator - Drain“ 79
“ Fuel System Secondary Filter/Water Separator - Drain“ 80
“ Walk-Around Inspection“ 89

Every 50 Service Hours or Weekly

“ Fuel Tank Water and Sediment - Drain“ 85

Every 500 Service Hours

“ Alternator and Fan Belts - Inspect/Adjust/Replace“ 58

Every 500 Service Hours or 1 Year

“ Battery Electrolyte Level - Check“ 59
“ Engine Air Cleaner Element (Dual Element) - Clean/Replace“ 66
“ Engine Air Cleaner Element (Single Element) - Inspect/Replace“ 68
“ Engine Ground - Inspect/Clean“ 69
“ Engine Oil and Filter - Change“. 71
“ Fuel System Primary Filter (Water Separator) Element - Replace“ 78
“ Fuel System Secondary Filter - Replace“. 81
“ Hoses and Clamps - Inspect/Replace“. 85
“ Radiator - Clean“ 86

Every 1000 Service Hours

“ Engine Valve Lash - Inspect/Adjust“. 73

Every 2000 Service Hours

“ Aftercooler Core - Inspect“ 57
“ Alternator - Inspect“ 58
“ Engine Mounts - Inspect“ 69
“ Starting Motor - Inspect“ 88
“ Turbocharger - Inspect“. 88
“ Water Pump - Inspect“. 89

Every 3000 Service Hours

“ Fuel Injector - Test/Change“ 74

Every 3000 Service Hours or 2 Years

“ Cooling System Coolant (Commercial Heavy-Duty) - Change“ 60

Every 4000 Service Hours

“ Aftercooler Core - Clean/Test“ 57

Every 6000 Service Hours or 3 Years

“ Cooling System Coolant (ELC) - Change“ 62

i02322260

Aftercooler Core - Clean/Test

1. Remove the core. Refer to the OEM information for the correct procedure.
2. Turn the aftercooler core upside-down in order to remove debris.

WARNING

Personal injury can result from air pressure.

Personal injury can result without following proper procedure. When using pressure air, wear a protective face shield and protective clothing.

Maximum air pressure at the nozzle must be less than 205 kPa (30 psi) for cleaning purposes.

3. Pressurized air is the preferred method for removing loose debris. Direct the air in the opposite direction of the fan's air flow. Hold the nozzle approximately 6 mm (.25 inch) away from the fins. Slowly move the air nozzle in a direction that is parallel with the tubes. This will remove debris that is between the tubes.
4. Pressurized water may also be used for cleaning. The maximum water pressure for cleaning purposes must be less than 275 kPa (40 psi). Use pressurized water in order to soften mud. Clean the core from both sides.

NOTICE
Do not use a high concentration of caustic cleaner to clean the core. A high concentration of caustic cleaner can attack the internal metals of the core and cause leakage. Only use the recommended concentration of cleaner.

5. Back flush the core with a suitable cleaner.
6. Steam clean the core in order to remove any residue. Flush the fins of the aftercooler core. Remove any other trapped debris.
7. Wash the core with hot, soapy water. Rinse the core thoroughly with clean water.

WARNING

Personal injury can result from air pressure.

Personal injury can result without following proper procedure. When using pressure air, wear a protective face shield and protective clothing.

Maximum air pressure at the nozzle must be less than 205 kPa (30 psi) for cleaning purposes.

8. Dry the core with compressed air. Direct the air in the reverse direction of the normal flow.
9. Inspect the core in order to ensure cleanliness. Pressure test the core. If necessary, repair the core.
10. Install the core. Refer to the OEM information for the correct procedure.
11. After cleaning, start the engine and accelerate the engine to high idle rpm. This will help in the removal of debris and drying of the core. Stop the engine. Use a light bulb behind the core in order to inspect the core for cleanliness. Repeat the cleaning, if necessary.

i02322295

Aftercooler Core - Inspect

Note: Adjust the frequency of cleaning according to the effects of the operating environment.

Inspect the aftercooler for these items: damaged fins, corrosion, dirt, grease, insects, leaves, oil and other debris. Clean the aftercooler, if necessary.

For air-to-air aftercoolers, use the same methods that are used for cleaning radiators.

WARNING

Personal injury can result from air pressure.

Personal injury can result without following proper procedure. When using pressure air, wear a protective face shield and protective clothing.

Maximum air pressure at the nozzle must be less than 205 kPa (30 psi) for cleaning purposes.

After cleaning, start the engine and accelerate the engine to high idle rpm. This will help in the removal of debris and drying of the core. Stop the engine. Use a light bulb behind the core in order to inspect the core for cleanliness. Repeat the cleaning, if necessary.

Inspect the fins for damage. Bent fins may be opened with a “comb”.

Note: If parts of the aftercooler system are repaired or replaced, a leak test is highly recommended.

Inspect these items for good condition: Welds, mounting brackets, air lines, connections, clamps and seals. Make repairs, if necessary.

i02322311

Alternator - Inspect

Perkins recommends a scheduled inspection of the alternator. Inspect the alternator for loose connections and correct battery charging. Check the ammeter (if equipped) during engine operation in order to ensure correct battery performance and/or correct performance of the electrical system. Make repairs, as required.

Check the alternator and the battery charger for correct operation. If the batteries are correctly charged, the ammeter reading should be very near zero. All batteries should be kept charged. The batteries should be kept warm because temperature affects the cranking power. If the battery is too cold, the battery will not crank the engine. When the engine is not run for long periods of time or if the engine is run for short periods, the batteries may not fully charge. A battery with a low charge will freeze more easily than a battery with a full charge.

i05899714

Alternator and Fan Belts - Inspect/Adjust/Replace

Inspection

To maximize the engine performance, inspect the belts for wear and for cracking. Replace belts that are worn or damaged.

For applications that require multiple drive belts, replace the belts in matched sets. Replacing only one belt of a matched set will cause the new belt to carry more load because the older belt is stretched. The additional load on the new belt could cause the new belt to break.

If the belts are too loose, vibration causes unnecessary wear on the belts and pulleys. Loose belts may slip enough to cause overheating.

To check accurately the belt tension, a suitable gauge should be used.

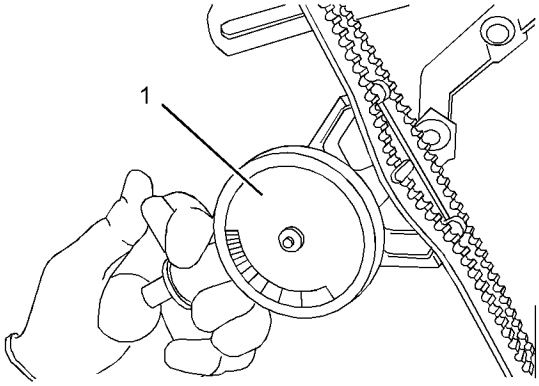

Illustration 31 g03716511

Typical example

(1) Burroughs Gauge

Fit the gauge (1) at the center of the longest free length and check the tension. The correct tension is 535 N (120 lb). If the tension of the belt is below 250 N (56 lb), adjust the belt to 535 N (120 lb).

If twin belts are installed, check and adjust the tension on both belts.

Adjustment

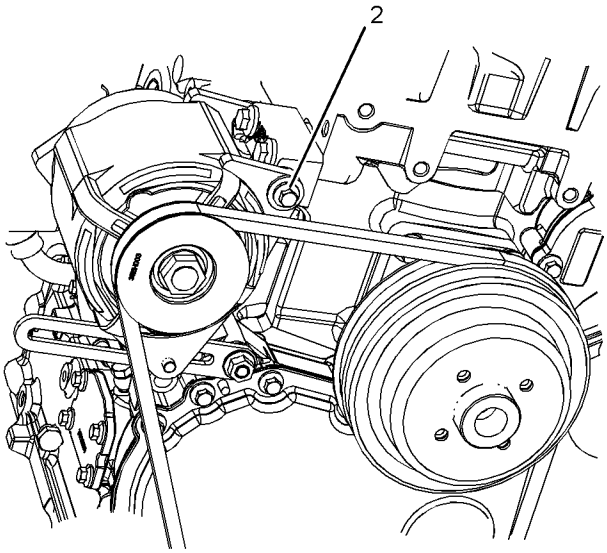

Illustration 32 g03716557

1. Loosen the alternator pivot bolt (2).

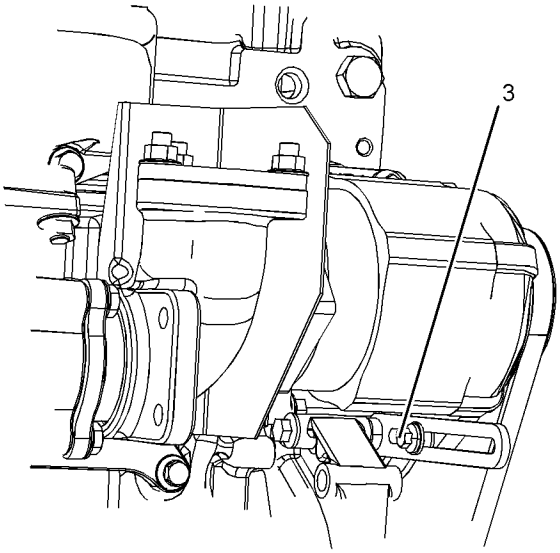

Illustration 33 g03716558

2. loosen the link bolt (3). Move the alternator in order to increase or decrease the belt tension. Tighten the alternator pivot bolt and the link bolt to 22 N·m (16 lb ft).(1).

Replacement

Refer to the Disassembly and Assembly Manual for the installation procedure and the removal procedure for the belt.

i02322315

Battery - Replace

WARNING

Batteries give off combustible gases which can explode. A spark can cause the combustible gases to ignite. This can result in severe personal injury or death.

Ensure proper ventilation for batteries that are in an enclosure. Follow the proper procedures in order to help prevent electrical arcs and/or sparks near batteries. Do not smoke when batteries are serviced.

WARNING

The battery cables or the batteries should not be removed with the battery cover in place. The battery cover should be removed before any servicing is attempted.

Removing the battery cables or the batteries with the cover in place may cause a battery explosion resulting in personal injury.

1. Switch the engine to the OFF position. Remove all electrical loads.

2. Turn off any battery chargers. Disconnect any battery chargers.

3. The NEGATIVE “-” cable connects the NEGATIVE “-” battery terminal to the NEGATIVE “-” terminal on the starting motor. Disconnect the cable from the NEGATIVE “-” battery terminal.

4. The POSITIVE “+” cable connects the POSITIVE “+” battery terminal to the POSITIVE “+” terminal on the starting motor. Disconnect the cable from the POSITIVE “+” battery terminal.

Note: Always recycle a battery. Never discard a battery. Dispose of used batteries to an appropriate recycling facility.

5. Remove the used battery.

6. Install the new battery.

Note: Before the cables are connected, ensure that the engine start switch is OFF.

7. Connect the cable from the starting motor to the POSITIVE “+” battery terminal.

8. Connect the NEGATIVE “-” cable to the NEGATIVE “-” battery terminal.

i02747977

Battery Electrolyte Level - Check

When the engine is not run for long periods of time or when the engine is run for short periods, the batteries may not fully recharge. Ensure a full charge in order to help prevent the battery from freezing. If batteries are correctly charged, the ammeter reading should be very near zero, when the engine is in operation.

WARNING

All lead-acid batteries contain sulfuric acid which can burn the skin and clothing. Always wear a face shield and protective clothing when working on or near batteries.

1. Remove the filler caps. Maintain the electrolyte level to the “FULL” mark on the battery.

   If the addition of water is necessary, use distilled water. If distilled water is not available use clean water that is low in minerals. Do not use artificially softened water.

2. Check the condition of the electrolyte with a suitable battery tester.
3. Install the caps.
4. Keep the batteries clean.

   Clean the battery case with one of the following cleaning solutions:

   - Use a solution of 0.1 kg (0.2 lb) baking soda and 1 L (1 qt) of clean water.
   - Use a solution of ammonium hydroxide.

   Thoroughly rinse the battery case with clean water.

i09570426

Battery or Battery Cable - Disconnect

WARNING

The battery cables or the batteries should not be removed with the battery cover in place. The battery cover should be removed before any servicing is attempted.

Removing the battery cables or the batteries with the cover in place may cause a battery explosion resulting in personal injury.

1. Turn the start switch to the OFF position. Turn the ignition switch (if equipped) to the OFF position and remove the key and all electrical loads.
2. Open the battery isolator. Disconnect the negative battery terminal. Ensure that the cable cannot contact the terminal. When four 12 volt batteries are involved, two negative connections must be disconnected.
3. Remove the positive connection.
4. Clean all disconnected connection and battery terminals.
5. Use a fine grade of sandpaper to clean the terminals and the cable clamps. Clean the items until the surfaces are bright or shiny. DO NOT remove material excessively. Excessive removal of material can cause the clamps to not fit correctly. Coat the clamps and the terminals with a suitable silicone lubricant or petroleum jelly.
6. Tape the cable connections to help prevent accidental starting.
7. Proceed with necessary system repairs.
8. To connect the battery, connect the positive connection before the negative connection.

i05901701

Cooling System Coolant (Commercial Heavy-Duty) - Change

NOTICE

Care must be taken to ensure that fluids are contained during performance of inspection, maintenance, testing, adjusting and repair of the product. Be prepared to collect the fluid with suitable containers before opening any compartment or disassembling any component containing fluids.

Dispose of all fluids according to Local regulations and mandates.

NOTICE

Keep all parts clean from contaminants.

Contaminants may cause rapid wear and shortened component life.

Clean the cooling system and flush the cooling system before the recommended maintenance interval if the following conditions exist:

- The engine overheats frequently.
- Foaming is observed.
- The oil has entered the cooling system and the coolant is contaminated.
- The fuel has entered the cooling system and the coolant is contaminated.

Note: When the cooling system is cleaned, only clean water is needed.

Note: Inspect the water pump and the water temperature regulator after the cooling system has been drained. This inspection is a good opportunity to replace the water pump, the water temperature regulator, and the hoses, if necessary.

Drain

WARNING

Pressurized System: Hot coolant can cause serious burns. To open the cooling system filler cap, stop the engine and wait until the cooling system components are cool. Loosen the cooling system pressure cap slowly in order to relieve the pressure.

1. Stop the engine and allow the engine to cool. Loosen the cooling system filler cap slowly in order to relieve any pressure. Remove the cooling system filler cap.

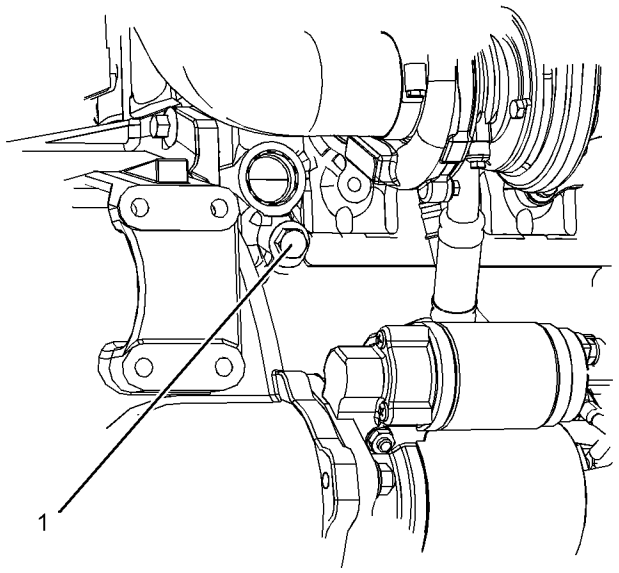

Illustration 34 g03716975

2. Open the drain cock or remove the drain plug (1) on the engine. Open the drain cock or remove the drain plug on the radiator.

   Allow the coolant to drain.

NOTICE
Dispose of used engine coolant or recycle. Various methods have been proposed to reclaim used coolant for reuse in engine cooling systems. The full distillation procedure is the only method acceptable by Perkins to reclaim the coolant.

For information regarding the disposal and the recycling of used coolant, consult your Perkins dealer or your Perkins distributor.

Flush

1. Flush the cooling system with clean water in order to remove any debris.
2. Close the drain cock or install the drain plug in the engine. Close the drain cock or install the drain plug on the radiator.

NOTICE
Do not fill the cooling system faster than 5 L (1.3 US gal) per minute to avoid air locks.

Cooling system air locks may result in engine damage.

3. Fill the cooling system with clean water. Install the cooling system filler cap.
4. Start and run the engine at low idle until the temperature reaches 49 to 66 °C (120 to 150 °F).
5. Stop the engine and allow the engine to cool. Loosen the cooling system filler cap slowly in order to relieve any pressure. Remove the cooling system filler cap. Open the drain cock or remove the drain plug on the engine. Open the drain cock or remove the drain plug on the radiator. Allow the water to drain. Flush the cooling system with clean water.

Fill

1. Close the drain cock or install the drain plug on the engine. Close the drain cock or install the drain plug on the radiator.

NOTICE
Do not fill the cooling system faster than 5 L (1.3 US gal) per minute to avoid air locks.

Cooling system air locks may result in engine damage.

2. Fill the cooling system with Commercial Heavy-Duty Coolant. Add Supplemental Coolant Additive to the coolant. For the correct amount, refer to the Operation and Maintenance Manual, “Fluid Recommendations” topic (Maintenance Section) for more information on cooling system specifications. Do not install the cooling system filler cap.

3. Start and run the engine at low idle. Increase the engine rpm to high idle. Run the engine at high idle for 1 minute in order to purge the air from the cavities of the engine block. Stop the engine.
4. Check the coolant level. Maintain the coolant level within 13 mm (0.5 inch) below the bottom of the pipe for filling. Maintain the coolant level in the expansion bottle (if equipped) at the correct level.
5. Clean the cooling system filler cap. Inspect the gasket that is on the cooling system filler cap. If the gasket that is on the cooling system filler cap is damaged, discard the old cooling system filler cap and install a new cooling system filler cap. If the gasket that is on the cooling system filler cap is not damaged, use a suitable pressurizing pump in order to pressure test the cooling system filler cap. The correct pressure for the cooling system filler cap is stamped on the face of the cooling system filler cap. If the cooling system filler cap does not retain the correct pressure, install a new cooling system filler cap.
6. Start the engine. Inspect the cooling system for leaks and for correct operating temperature.

i05907641

Cooling System Coolant (ELC) - Change

NOTICE
Care must be taken to ensure that fluids are contained during performance of inspection, maintenance, testing, adjusting and repair of the product. Be prepared to collect the fluid with suitable containers before opening any compartment or disassembling any component containing fluids.

Dispose of all fluids according to Local regulations and mandates.

NOTICE
Keep all parts clean from contaminants.

Contaminants may cause rapid wear and shortened component life.

Clean the cooling system and flush the cooling system before the recommended maintenance interval if the following conditions exist:

- The engine overheats frequently.
- Foaming is observed.
- The oil has entered the cooling system and the coolant is contaminated.
- The fuel has entered the cooling system and the coolant is contaminated.

Note: When the cooling system is cleaned, only clean water is needed when the ELC is drained and replaced.

Note: Inspect the water pump and the water temperature regulator after the cooling system has been drained. This inspection is a good opportunity to replace the water pump, the water temperature regulator, and the hoses, if necessary.

Drain

WARNING

Pressurized System: Hot coolant can cause serious burns. To open the cooling system filler cap, stop the engine and wait until the cooling system components are cool. Loosen the cooling system pressure cap slowly in order to relieve the pressure.

1. Stop the engine and allow the engine to cool. Loosen the cooling system filler cap slowly in order to relieve any pressure. Remove the cooling system filler cap.

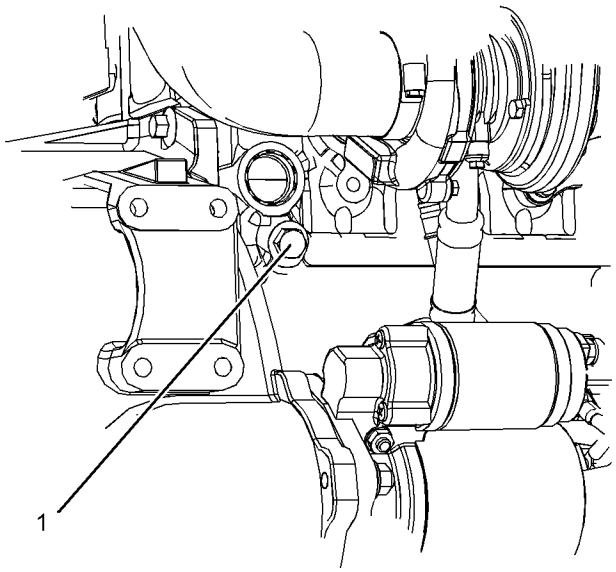

Illustration 35 g03716975
Typical example

2. Open the drain cock or remove the drain plug (1) on the engine. Open the drain cock or remove the drain plug on the radiator.

   Allow the coolant to drain.

NOTICE
Dispose of used engine coolant or recycle. Various methods have been proposed to reclaim used coolant for reuse in engine cooling systems. The full distillation procedure is the only method acceptable by Perkins to reclaim the coolant.

For information regarding the disposal and the recycling of used coolant, consult your Perkins dealer or your Perkins distributor.

Flush

1. Flush the cooling system with clean water in order to remove any debris.
2. Close the drain cock or install the drain plug in the engine. Close the drain cock or install the drain plug on the radiator.

NOTICE
Do not fill the cooling system faster than 5 L (1.3 US gal) per minute to avoid air locks.

Cooling system air locks may result in engine damage.

3. Fill the cooling system with clean water. Install the cooling system filler cap.
4. Start and run the engine at low idle until the temperature reaches 49 to 66 °C (120 to 150 °F).
5. Stop the engine and allow the engine to cool. Loosen the cooling system filler cap slowly in order to relieve any pressure. Remove the cooling system filler cap. Open the drain cock or remove the drain plug on the engine. Open the drain cock or remove the drain plug on the radiator. Allow the water to drain. Flush the cooling system with clean water.

Fill

1. Close the drain cock or install the drain plug on the engine. Close the drain cock or install the drain plug on the radiator.

NOTICE
Do not fill the cooling system faster than 5 L (1.3 US gal) per minute to avoid air locks.

Cooling system air locks may result in engine damage.

2. Fill the cooling system with Extended Life Coolant (ELC). Refer to the Operation and Maintenance Manual, “Fluid Recommendations” topic (Maintenance Section) for more information on cooling system specifications. Do not install the cooling system filler cap.
3. Start and run the engine at low idle. Increase the engine rpm to high idle. Run the engine at high idle for 1 minute in order to purge the air from the cavities of the engine block. Stop the engine.
4. Check the coolant level. Maintain the coolant level within 13 mm (0.5 inch) below the bottom of the pipe for filling. Maintain the coolant level in the expansion bottle (if equipped) at the correct level.
5. Clean the cooling system filler cap. Inspect the gasket that is on the cooling system filler cap. If the gasket that is on the cooling system filler cap is damaged, discard the old cooling system filler cap and install a new cooling system filler cap. If the gasket that is on the cooling system filler cap is not damaged, use a suitable pressurizing pump in order to pressure test the cooling system filler cap. The correct pressure for the cooling system filler cap is stamped on the face of the cooling system filler cap. If the cooling system filler cap does not retain the correct pressure, install a new cooling system filler cap.
6. Start the engine. Inspect the cooling system for leaks and for correct operating temperature.

i08755303

Cooling System Coolant Level - Check

Engines With a Coolant Recovery Tank

Note: The cooling system may not have been provided by Perkins. The procedure that follows, is for typical cooling systems. Refer to the OEM information for the correct procedures.

Check the coolant level when the engine is stopped and cool.

NOTICE
When any servicing or repair of the engine cooling system is performed, the procedure must be performed with the engine on level ground. The level engine will allow for an accurate coolant level check and also help in avoiding the risk of introducing an air lock into the coolant system.

1. Observe the coolant level in the coolant recovery tank. Maintain the coolant level to “COLD FULL” mark on the coolant recovery tank.

WARNING

Pressurized System: Hot coolant can cause serious burns. To open the cooling system filler cap, stop the engine and wait until the cooling system components are cool. Loosen the cooling system pressure cap slowly in order to relieve the pressure.

2. Loosen filler cap slowly to relieve any pressure. Remove the filler cap.

3. Pour the correct coolant mixture into the tank. Refer to the Operation and Maintenance Manual, “Refill Capacities and Recommendations” for information on the correct mixture and type of coolant. Refer to the Operation and Maintenance Manual, “Refill Capacities and Recommendations” for the cooling system capacity. Do not fill the coolant recovery tank above “COLD FULL” mark.

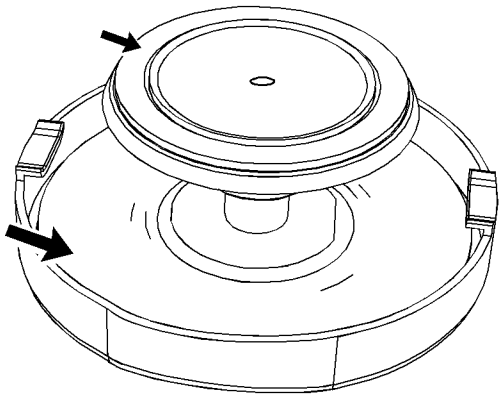

Illustration 36 g02590196
Filler cap

4. Clean filler cap and the receptacle. Reinstall the filler cap and inspect the cooling system for leaks.

Note: The coolant will expand as the coolant heats up during normal engine operation. The additional volume will be forced into the coolant recovery tank during engine operation. When the engine is stopped and cool, the coolant will return to the engine.

Engines with Factory Installed Radiators

The information that follows, is for engine models DD, DJ, DK, and XK. These engine models have factory installed radiators.

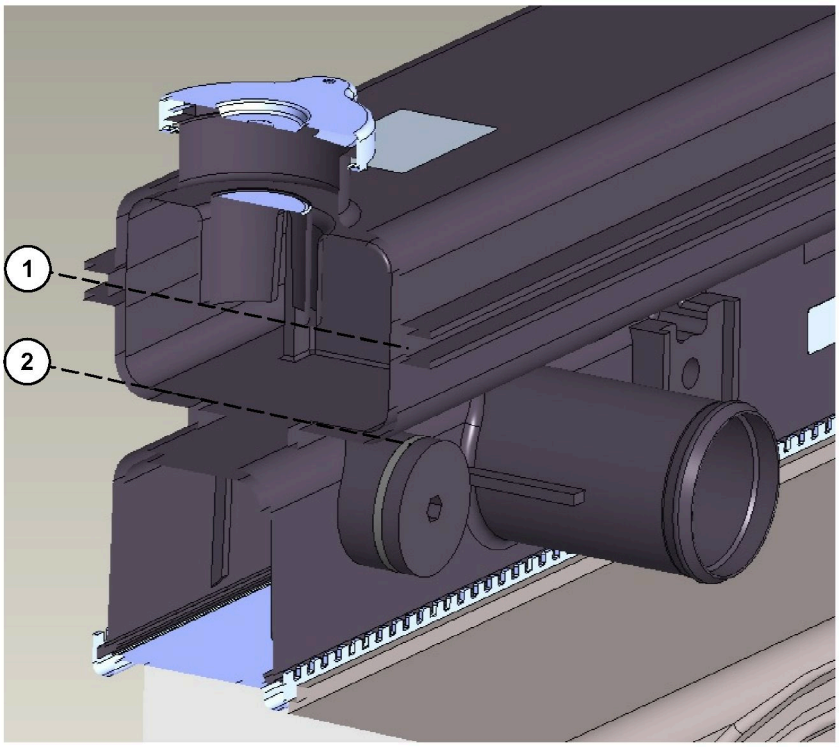

Illustration 37 g06748785

Typical example

(1) Maximum coolant level (2) Minimum coolant level

The maximum coolant level corresponds to coolant at the bottom end of the filler neck (1). The minimum coolant level corresponds to the bottom of the header tank (2).

Check periodically for evidence of light-colored residue around where the coolant overflow pipe drains. Light-colored residue is an indicator of overfilling or boiling when in operation.

For radiators that have been replaced due to leak, Perkins recommends that a coolant sample is obtained from the existing radiator before the radiator is replaced. Perkins recommends that the Perkins Fluid Sampling program is used. Contact your Perkins distributor or dealer for more information.

Engines Without a Coolant Recovery Tank

Check the coolant level when the engine is stopped and cool.

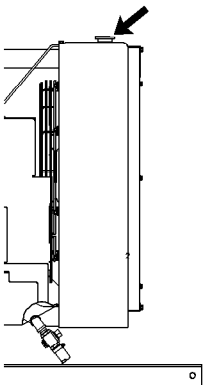

Illustration 38 g00285520

Cooling system filler cap

WARNING

Pressurized System: Hot coolant can cause serious burns. To open the cooling system filler cap, stop the engine and wait until the cooling system components are cool. Loosen the cooling system pressure cap slowly in order to relieve the pressure.

1. Remove the cooling system filler cap slowly to relieve pressure.
2. Maintain the coolant level at the maximum mark that is correct for your application. If the engine is equipped with a sight glass, maintain the coolant level to the correct level in the sight glass.
3. Clean the cooling system filler cap and inspect the gasket. If the gasket is damaged, discard the old filler cap and install a new filler cap. If the gasket is not damaged, use a suitable pressurizing pump to pressure test the filler cap. The correct pressure is stamped on the face of the filler cap. If the filler cap does not retain the correct pressure, install a new filler cap.
4. Inspect the cooling system for leaks.

i08397642

Driven Equipment - Check

Refer to the OEM specifications for more information on the following maintenance recommendations for the driven equipment:

- Inspection
- Adjustment
- Lubrication
- Other maintenance recommendations

Perform any maintenance for the driven equipment which is recommended by the OEM.

i07766787

Engine - Clean

WARNING

Personal injury or death can result from high voltage.

Moisture can create paths of electrical conductivity.

Make sure that the electrical system is OFF. Lock out the starting controls and tag the controls “DO NOT OPERATE” .

NOTICE
Accumulated grease and oil on an engine is a fire hazard. Keep the engine clean. Remove debris and fluid spills whenever a significant quantity accumulates on the engine.

NOTICE
Failure to protect some engine components from washing may make your engine warranty invalid. Allow the engine to cool for one hour before washing the engine.

Periodic cleaning of the engine is recommended. Steam cleaning the engine will remove accumulated oil and grease. A clean engine provides the following benefits:

- Easy detection of fluid leaks
- Maximum heat transfer characteristics
- Ease of maintenance

Note: Caution must be used to prevent electrical components from being damaged by excessive water when the engine is cleaned. Do not direct the flow of water from pressure washers or steam cleaners at any electrical connectors or the junction of cables. Avoid electrical components such as the alternator and the starter motor. Protect the fuel injection pump from fluids when washing the engine.

i01915869

Engine Air Cleaner Element (Dual Element) - Clean/Replace

NOTICE
Never run the engine without an air cleaner element installed. Never run the engine with a damaged air cleaner element. Do not use air cleaner elements with damaged pleats, gaskets or seals. Dirt entering the engine causes premature wear and damage to engine components. Air cleaner elements help to prevent airborne debris from entering the air inlet.

NOTICE
Never service the air cleaner element with the engine running since this will allow dirt to enter the engine.

Servicing the Air Cleaner Elements

Note: The air filter system may not have been provided by Perkins. The procedure that follows is for a typical air filter system. Refer to the OEM information for the correct procedure.

If the air cleaner element becomes plugged, the air can split the material of the air cleaner element. Unfiltered air will drastically accelerate internal engine wear. Refer to the OEM information for the correct air cleaner elements for your application.

- Check the precleaner (if equipped) and the dust bowl daily for accumulation of dirt and debris. Remove any dirt and debris, as needed.
- Operating conditions (dust, dirt and debris) may require more frequent service of the air cleaner element.
- The air cleaner element should be replaced at least one time per year. This replacement should be performed regardless of the number of cleanings.

Replace the dirty air cleaner elements with clean air cleaner elements. Before installation, the air cleaner elements should be thoroughly checked for tears and/or holes in the filter material. Inspect the gasket or the seal of the air cleaner element for damage. Maintain a supply of suitable air cleaner elements for replacement purposes.

Dual Element Air Cleaners

The dual element air cleaner contains a primary air cleaner element and a secondary air cleaner element. The primary air cleaner element can be used up to six times if the element is properly cleaned and properly inspected. The primary air cleaner element should be replaced at least one time per year. This replacement should be performed regardless of the number of cleanings.

The secondary air cleaner element is not serviceable or washable. Refer to the OEM information for instructions in order to replace the secondary air cleaner element. When the engine is operating in environments that are dusty or dirty, air cleaner elements may require more frequent replacement.

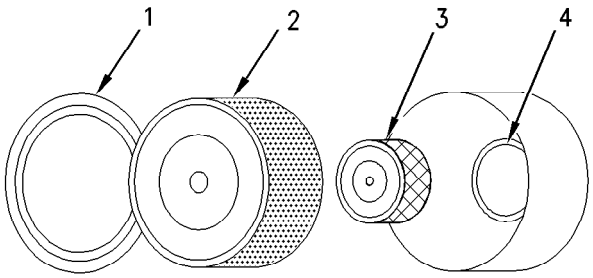

Illustration 39 g00736431

(1) Cover
(2) Primary air cleaner element
(3) Secondary air cleaner element
(4) Air inlet

1. Remove the cover. Remove the primary air cleaner element.
2. The secondary air cleaner element should be removed and discarded for every three cleanings of the primary air cleaner element.

Note: Refer to “Cleaning the Primary Air Cleaner Elements”.

3. Cover the air inlet with tape in order to keep dirt out.
4. Clean the inside of the air cleaner cover and body with a clean, dry cloth.
5. Remove the tape for the air inlet. Install the secondary air cleaner element. Install a primary air cleaner element that is new or cleaned.
6. Install the air cleaner cover.
7. Reset the air cleaner service indicator.

Cleaning the Primary Air Cleaner Elements

NOTICE

Observe the following guidelines if you attempt to clean the filter element:

Do not tap or strike the filter element in order to remove dust.

Do not wash the filter element.

Use low pressure compressed air in order to remove the dust from the filter element. Air pressure must not exceed 207 kPa (30 psi). Direct the air flow up the pleats and down the pleats from the inside of the filter element. Take extreme care in order to avoid damage to the pleats.

Do not use air filters with damaged pleats, gaskets, or seals. Dirt entering the engine will cause damage to engine components.

Refer to the OEM information in order to determine the number of times that the primary filter element can be cleaned. When the primary air cleaner element is cleaned, check for rips or tears in the filter material. The primary air cleaner element should be replaced at least one time per year. This replacement should be performed regardless of the number of cleanings.

NOTICE

Do not clean the air cleaner elements by bumping or tapping. This could damage the seals. Do not use elements with damaged pleats, gaskets or seals. Damaged elements will allow dirt to pass through. Engine damage could result.

Visually inspect the primary air cleaner elements before cleaning. Inspect the air cleaner elements for damage to the seal, the gaskets, and the outer cover. Discard any damaged air cleaner elements.

There are two common methods that are used to clean primary air cleaner elements:

- Pressurized air
- Vacuum cleaning

Pressurized Air

Pressurized air can be used to clean primary air cleaner elements that have not been cleaned more than two times. Pressurized air will not remove deposits of carbon and oil. Use filtered, dry air with a maximum pressure of 207 kPa (30 psi).

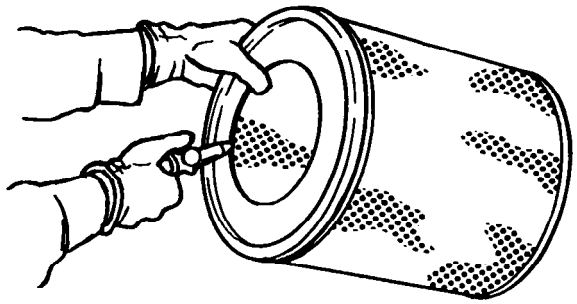

Illustration 40 g00281692

Note: When the primary air cleaner elements are cleaned, always begin with the clean side (inside) in order to force dirt particles toward the dirty side (outside).

Aim the hose so that the air flows inside the element along the length of the filter in order to help prevent damage to the paper pleats. Do not aim the stream of air directly at the primary air cleaner element. Dirt could be forced further into the pleats.

Note: Refer to “Inspecting the Primary Air Cleaner Elements”.

Vacuum Cleaning

Vacuum cleaning is a good method for cleaning primary air cleaner elements which require daily cleaning because of a dry, dusty environment. Cleaning with pressurized air is recommended prior to vacuum cleaning. Vacuum cleaning will not remove deposits of carbon and oil.

Note: Refer to “Inspecting the Primary Air Cleaner Elements”.

Inspecting the Primary Air Cleaner Elements

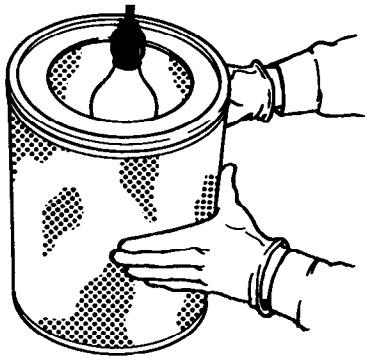

Illustration 41 g00281693

Inspect the clean, dry primary air cleaner element. Use a 60 watt blue light in a dark room or in a similar facility. Place the blue light in the primary air cleaner element. Rotate the primary air cleaner element. Inspect the primary air cleaner element for tears and/or holes. Inspect the primary air cleaner element for light that may show through the filter material. If it is necessary in order to confirm the result, compare the primary air cleaner element to a new primary air cleaner element that has the same part number.

Do not use a primary air cleaner element that has any tears and/or holes in the filter material. Do not use a primary air cleaner element with damaged pleats, gaskets or seals. Discard damaged primary air cleaner elements.

i02152042

Engine Air Cleaner Element (Single Element) - Inspect/Replace

Refer to Operation and Maintenance Manual, “Engine Air Cleaner Service Indicator-Inspect”.

NOTICE
Never run the engine without an air cleaner element installed. Never run the engine with a damaged air cleaner element. Do not use air cleaner elements with damaged pleats, gaskets or seals. Dirt entering the engine causes premature wear and damage to engine components. Air cleaner elements help to prevent airborne debris from entering the air inlet.

NOTICE
Never service the air cleaner element with the engine running since this will allow dirt to enter the engine.

A wide variety of air cleaners may be installed for use with this engine. Consult the OEM information for the correct procedure to replace the air cleaner.

i01909507

Engine Air Cleaner Service Indicator - Inspect

Some engines may be equipped with a different service indicator.

Some engines are equipped with a differential gauge for inlet air pressure. The differential gauge for inlet air pressure displays the difference in the pressure that is measured before the air cleaner element and the pressure that is measured after the air cleaner element. As the air cleaner element becomes dirty, the pressure differential rises. If your engine is equipped with a different type of service indicator, follow the OEM recommendations in order to service the air cleaner service indicator.

The service indicator may be mounted on the air cleaner element or in a remote location.

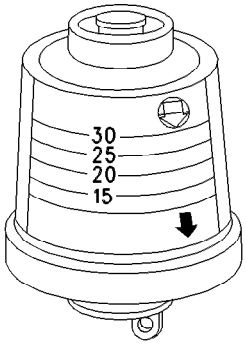

Illustration 42 g00103777
Typical service indicator

Observe the service indicator. The air cleaner element should be cleaned or the air cleaner element should be replaced when one of the following conditions occur:

- The yellow diaphragm enters the red zone.
- The red piston locks in the visible position.

Test the Service Indicator

Service indicators are important instruments.

- Check for ease of resetting. The service indicator should reset in less than three pushes.
- Check the movement of the yellow core when the engine is accelerated to the engine rated speed. The yellow core should latch approximately at the greatest vacuum that is attained.

If the service indicator does not reset easily, or if the yellow core does not latch at the greatest vacuum, the service indicator should be replaced. If the new service indicator will not reset, the hole for the service indicator may be restricted.

The service indicator may need to be replaced frequently in environments that are severely dusty.

i01941505

Engine Ground - Inspect/Clean

Inspect the wiring harness for good connections.

Perkins use the starter motor in order to ground the engine. Check the connection on the starter motor at every oil change. Ground wires and straps should be combined at engine grounds. All grounds should be tight and free of corrosion.

- Clean the grounding stud on the starter motor and the terminals with a clean cloth.
- If the connections are corroded, clean the connections with a solution of baking soda and water.
- Keep the grounding stud and the strap clean and coated with suitable grease or petroleum jelly.

i07819538

Engine Mounts - Inspect

Note: The engine mounts may not have been supplied by Perkins. Refer to the Original Equipment Manufacturer (OEM) information for further details on the engine mounts and the correct bolt torque.

Inspect the engine mounts for deterioration and for correct bolt torque. Excessive engine vibration can be caused by the following conditions:

- Incorrect mounting of the engine
- Deterioration of the engine mounts
- Loose engine mounts

Any engine mount that shows deterioration should be replaced. Refer to the OEM information for the recommended torques.

When the engine mounts are supplied by Perkins the maintenance procedure will be supplied in the Disassembly and Assembly manual for your engine.

i05909059

Engine Oil Level - Check

WARNING

Hot oil and hot components can cause personal injury. Do not allow hot oil or hot components to contact the skin.

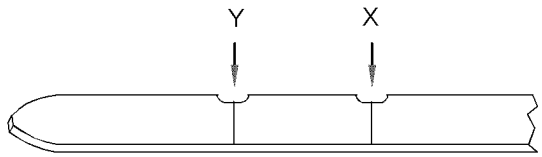

Illustration 43 g01165836

(Y) “Min” mark. (X) “Max” mark.

Illustration 44 g02173847

(L) “Min” mark. (H) “Max” mark.

NOTICE
Perform this maintenance with the engine stopped.

Note: Ensure that the engine is either level or that the engine is in the normal operating position in order to obtain a true level indication.

Note: After the engine has been switched OFF, wait for 10 minutes in order to allow the engine oil to drain to the oil pan. Then, check the oil level.

1. Maintain the oil level between the “ADD” mark (Y) and the “FULL” mark (X) on the engine oil dipstick. Or maintain the engine oil level between the H and L mark. Do not over fill the crankcase.

NOTICE
Operating your engine when the oil level is above the “FULL” mark could cause your crankshaft to dip into the oil. The air bubbles created from the crankshaft dipping into the oil reduces the oil's lubricating characteristics and could result in the loss of power.

2. Remove the oil filler cap and add oil, if necessary. Clean the oil filler cap. Install the oil filler cap.

i02202699

Engine Oil Sample - Obtain

The condition of the engine lubricating oil may be checked at regular intervals as part of a preventive maintenance program. Perkins include an oil sampling valve as an option. The oil sampling valve (if equipped) is included in order to regularly sample the engine lubricating oil. The oil sampling valve is positioned on the oil filter head or the oil sampling valve is positioned on the cylinder block.

Perkins recommends using a sampling valve in order to obtain oil samples. The quality and the consistency of the samples are better when a sampling valve is used. The location of the sampling valve allows oil that is flowing under pressure to be obtained during normal engine operation.

Obtain the Sample and the Analysis

WARNING

Hot oil and hot components can cause personal injury. Do not allow hot oil or hot components to contact the skin.

In order to help obtain the most accurate analysis, record the following information before an oil sample is taken:

- The date of the sample
- Engine model
- Engine number
- Service hours on the engine

- The number of hours that have accumulated since the last oil change
- The amount of oil that has been added since the last oil change

Ensure that the container for the sample is clean and dry. Also ensure that the container for the sample is clearly labelled.

To ensure that the sample is representative of the oil in the crankcase, obtain a warm, well mixed oil sample.

To avoid contamination of the oil samples, the tools and the supplies that are used for obtaining oil samples must be clean.

The sample can be checked for the following: the quality of the oil, the existence of any coolant in the oil, the existence of any ferrous metal particles in the oil and the existence of any nonferrous metal particles in the oil.

i10581780

Engine Oil and Filter - Change

WARNING

Hot oil and hot components can cause personal injury. Do not allow hot oil or hot components to contact the skin.

Do not drain the oil when the engine is cold. As the oil cools, suspended waste particles settle on the bottom of the oil pan. The waste particles are not removed with the draining cold oil. Drain the crankcase with the engine stopped. Drain the crankcase with the oil warm. This draining method allows the waste particles that are suspended in the oil to be drained properly.

Failure to follow this recommended procedure will cause the waste particles to be recirculated through the engine lubrication system with the new oil.

Drain the Engine Oil

Note: Ensure that the container that will be used is large enough to collect the waste oil.

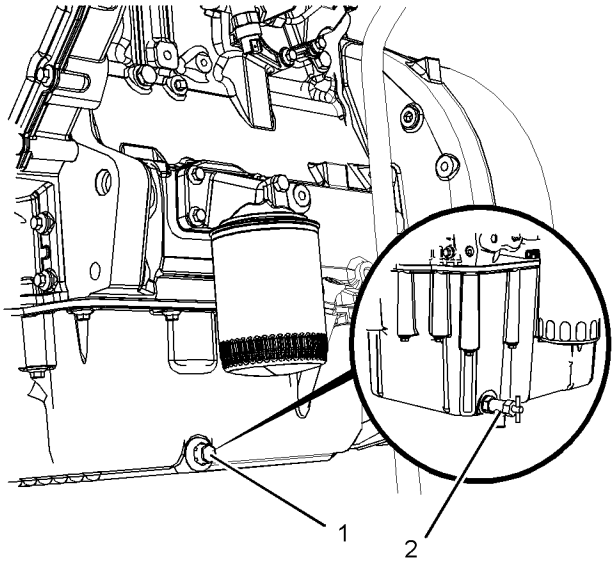

Illustration 45 g03720357

Typical example

(1) Drain plug
(2) Drain valve

After the engine has been run at the normal operating temperature, stop the engine. Use one of the following methods to drain the engine crankcase oil:

- If the engine is equipped with a drain valve (2), turn the drain valve knob counterclockwise in order to drain the oil. After the oil has drained, turn the drain valve knob clockwise in order to close the drain valve.
- If the engine is not equipped with a drain valve, remove the oil drain plug (1) in order to allow the oil to drain.

After the oil has drained, the oil drain plugs should be cleaned and installed. If necessary, renew the O ring seal on the drain plug.

Some types of oil pans have oil drain plugs that are on both sides of the oil pan, because of the shape of the pan. This type of oil pan requires the engine oil to be drained from both plugs.

Tighten the drain plug to a torque of 34 N·m (25 lb ft).

Replace the Oil Filter

NOTICE
Perkins oil filters are manufactured to Perkins specifications. Use of an oil filter that is not recommended by Perkins could result in severe damage to the engine bearings, crankshaft, etc., as a result of the larger waste particles from unfiltered oil entering the engine lubricating system. Only use oil filters recommended by Perkins.

Replace the Type 1 Oil Filter

1. Remove the oil filter (5) with a suitable tool.

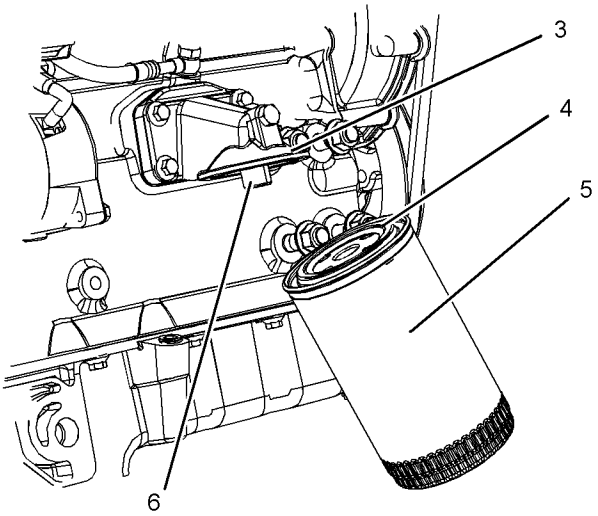

Illustration 46 g03720358
Typical example

2. Clean the sealing surface of the oil filter base (3). Ensure that the union (6) in the oil filter base is secure and free from damage.

3. Apply clean engine oil to the O ring seal (4) on the oil filter.

NOTICE
Do not fill the oil filters with oil before installing them. This oil would not be filtered and could be contaminated. Contaminated oil can cause accelerated wear to engine components or engine damage.

4. Install the new oil filter (5). Spin on the oil filter until the O ring contacts the sealing surface (3). Then rotate the oil filter ¾ of a full turn. Remove the container and disposal of the waste oil in accordance with local regulations.

Replace the Type 2 Oil Filter

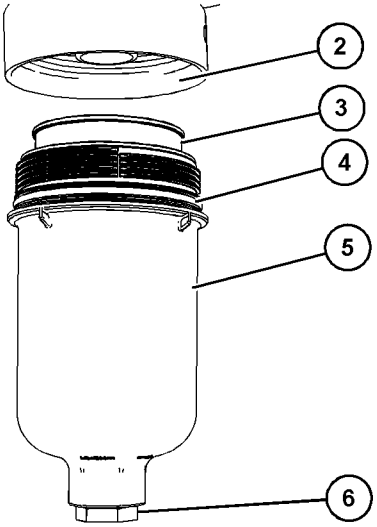

Illustration 47 g07927122
Typical example

1. Loosen the oil filter drain plug (6) to allow the oil to drain. Retighten the drain plug to 5 N·m (44 lb in).

2. Remove the housing (5) from the engine oil filter base by rotating the housing in a counterclockwise direction.

3. Rotate the element (3) in a clockwise direction and pull the element to remove the element from the housing (5).

4. Remove the O-ring seal (4) from the housing (5). Discard the O-ring seal.

5. Clean sealing surface (2).

6. Install a new O-ring seal (4) to the housing (5). Lubricate the O-ring seal with clean engine oil.

NOTICE
Do not fill the oil filters with oil before installing them. This oil would not be filtered and could be contaminated. Contaminated oil can cause accelerated wear to engine components or engine damage.

7. Install a new element (3) into the housing (5). Turn the element (3) in a counterclockwise direction to lock the new element into the housing (5).

8. Install the housing (5) to the engine oil filter base. Hand tighten the housing (5). Tighten the housing to a torque of 40 N·m (30 lb ft).

Fill the Engine Crankcase

1. Remove the oil filler cap. Refer to the Operation and Maintenance Manual for more information on lubricant specifications. Fill the crankcase with the proper amount of oil. Refer to the Operation and Maintenance Manual for more information on refill capacities.

NOTICE
If equipped with an auxiliary oil filter system or a remote oil filter system, follow the OEM or filter manufacturer's recommendations. Under filling or overfilling the crankcase with oil can cause engine damage.

NOTICE
To prevent crankshaft bearing damage, crank the engine with the fuel OFF. This will fill the oil filters before starting the engine. Do not crank the engine for more than 30 seconds.

2. Start the engine and run the engine at “LOW IDLE” for 2 minutes. Perform this procedure in order to ensure that the lubrication system has oil and that the oil filters are filled. Inspect the oil filter for oil leaks.

3. Stop the engine and allow the oil to drain back to the sump for a minimum of 10 minutes.

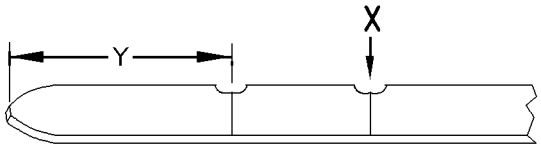

Illustration 48 g00998024
(Y) “ADD” mark. (X) “FULL” mark.

4. Remove the oil level gauge in order to check the oil level. Maintain the oil level between the “ADD” and “FULL” marks on the engine oil dipstick.

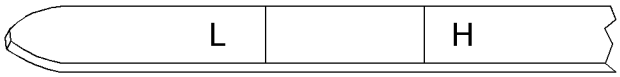

Illustration 49 g02173847
“L” Low
“H” High

5. Some dipstick could be marked with a “H” and “L” , refer to illustration 49 . Maintain the oil level between “L” and “H” marks on the engine oil level gauge. Do not fill the crankcase above the “H” mark.

i02171102

Engine Valve Lash - Inspect/ Adjust

This maintenance is recommended by Perkins as part of a lubrication and preventive maintenance schedule in order to help provide maximum engine life.

NOTICE
Only qualified service personel should perform this maintenance. Refer to the Service Manual or your authorized Perkins dealer or your Perkins distributor for the complete valve lash adjustment procedure.

Operation of Perkins engines with incorrect valve lash can reduce engine efficiency, and also reduce engine component life.

WARNING

Ensure that the engine can not be started while this maintenance is being performed. To help prevent possible injury, do not use the starting motor to turn the flywheel.

Hot engine components can cause burns. Allow additional time for the engine to cool before measuring/adjusting valve lash clearance.

Ensure that the engine is stopped before measuring the valve lash. The engine valve lash can be inspected and adjusted when the temperature of the engine is hot or cold.

Refer to Systems Operation/Testing and Adjusting, “Engine Valve Lash - Inspect/Adjust” for more information.

i02198352

Fuel Injector - Test/Change

WARNING

Fuel leaked or spilled onto hot surfaces or electrical components can cause a fire.

NOTICE
Do not allow dirt to enter the fuel system. Thoroughly clean the area around a fuel system component that will be disconnected. Fit a suitable cover over any disconnected fuel system components.

NOTICE
If a fuel injector is suspected of operating outside of normal parameters it should be removed by a qualified technician. The suspect fuel injector should be taken to an authorised agent for inspection.

The fuel injector (1) in illustration 50 has no fuel return. The fuel injector (2) has a fuel return.

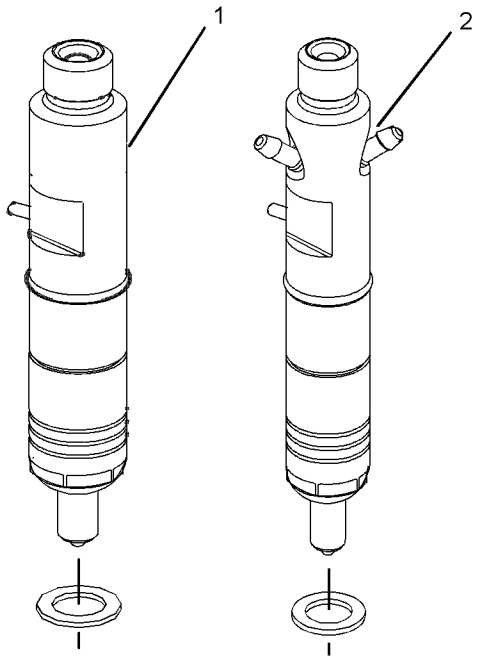

Illustration 50 g01110422
Typical fuel Injectors

The fuel injector (1) will need to be removed and the injector will need to be checked for performance.

The fuel injectors should not be cleaned as cleaning with incorrect tools can damage the nozzle. The fuel injectors should be renewed only if a fault with the fuel injectors occurs. Some of the problems that may indicate that new fuel injectors are needed are listed below:

- The engine will not start or the engine is difficult to start.
- Not enough power
- The engine misfires or the engine runs erratically.
- High fuel consumption
- Black exhaust smoke
- The engine knocks or there is vibration in the engine.
- Excessive engine temperature

Removal and Installation of the Fuel Injectors

WARNING

Work carefully around an engine that is running. Engine parts that are hot, or parts that are moving, can cause personal injury.

WARNING

Make sure that you wear eye protection at all times during testing. When fuel injection nozzles are tested, test fluids travel through the orifices of the nozzle tip with high pressure. Under this amount of pressure, the test fluid can pierce the skin and cause serious injury to the operator. Always keep the tip of the fuel injection nozzle pointed away from the operator and into the fuel collector and extension.

NOTICE
If your skin comes into contact with high pressure fuel, obtain medical assistence immediately.

Operate the engine at a fast idle speed in order to identify the faulty fuel injector. Individually loosen and tighten the union nut for the high pressure pipe to each fuel injector. Do not loosen the union nut more than half a turn. There will be little effect on the engine speed when the union nut to the faulty fuel injection nozzle is loosened. Refer to the Disassembly and Assembly Manual for more information. Consult your authorized Perkins dealer or your Perkins distributor for assistance.

i05909104

Fuel System - Prime

If air enters the fuel system, the air must be purged from the fuel system before the engine can be started. Air can enter the fuel system when the following events occur:

- The fuel tank is empty or the fuel tank has been partially drained.
- The low-pressure fuel lines are disconnected.
- A leak exists in the low-pressure fuel system.
- The fuel filter is replaced.
- A new injection pump is installed.

Use one of the following procedures in order to remove air from the fuel system:

NOTICE
Do not crank the engine continuously for more than 30 seconds. Allow the starting motor to cool for two minutes before cranking the engine again.

Engines with Electric Priming Pumps

There are many different types of electric priming pumps. These fuel pumps can be put into two categories. Remotely mounted fuel priming pump and secondary fuel filter mounted priming pump.

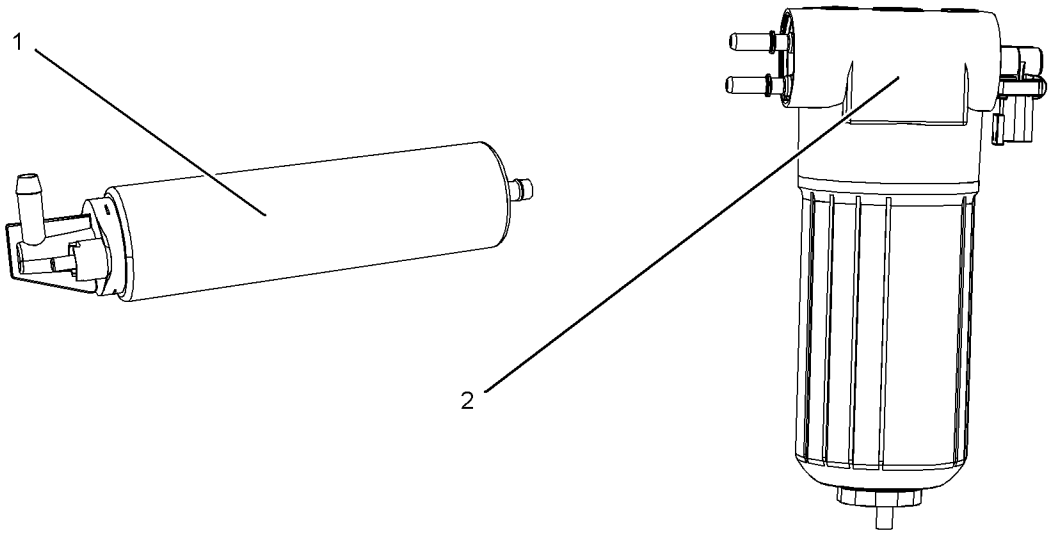

Illustration 51 g03721131

(1) Typical example of a remotely mounted priming pump.

(2) Typical example of a priming pump mounted on a secondary fuel filter.

Injection Pump Types

There are two different types of fuel injection pump that can be installed. The Bosch fuel injection pump and the Delphi fuel injection pump.

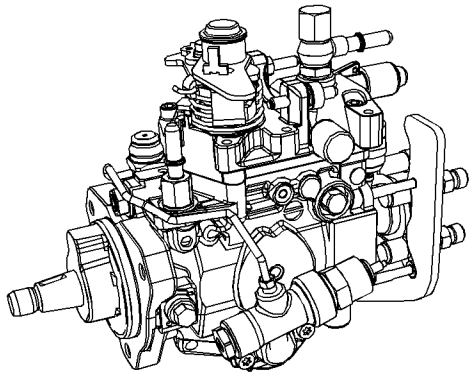

Illustration 52 g03721128

Typical example of the Bosch fuel injection pump.

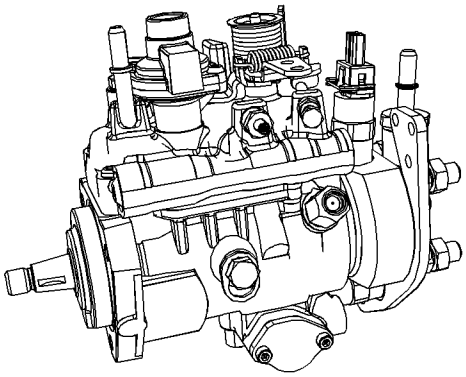

Illustration 53 g03721129

Typical example of the Delphi fuel injection pump.

Both fuel injection pumps are self venting.

Priming the Bosch Fuel Injection Pump

1. Turn the keyswitch to the ON position and allow 90 seconds for the electric priming pump to prime the system.
2. Turn the keyswitch to the OFF position and then start the engine. Check for leaks in the fuel system.

Refer to this Operation and Maintenance Manual, “Starting the Engine” for more information.

Priming the Delphi Fuel Injection Pump for a Variable Speed Engine

1. Turn the keyswitch to the ON position and allow 180 seconds for the electric priming pump to prime the system.
2. Turn the keyswitch to the OFF position and then start the engine with the throttle in the closed position. Operate the engine at idle with no load for 60 seconds and then shutdown the engine.
3. Wait 30 seconds and start the engine. This procedure will remove any air that could be trapped within the fuel injection pump. Check for leaks in the fuel system.

Refer to this Operation and Maintenance Manual, “Starting the Engine” for more information.

Priming the Delphi Fuel Injection Pump for a Constant Speed Engine

1. Turn the keyswitch to the ON position and allow 180 seconds for the electric priming pump to prime the system.
2. Turn the keyswitch to the OFF position and then start the engine. Operate the engine with no load for 60 seconds and then shutdown the engine.
3. Wait 30 seconds and start the engine. This procedure will remove any air that could be trapped within the fuel injection pump. Check for leaks in the fuel system.

Refer to this Operation and Maintenance Manual, “Starting the Engine” for more information.

Engines with Mechanically Operated Priming Pumps

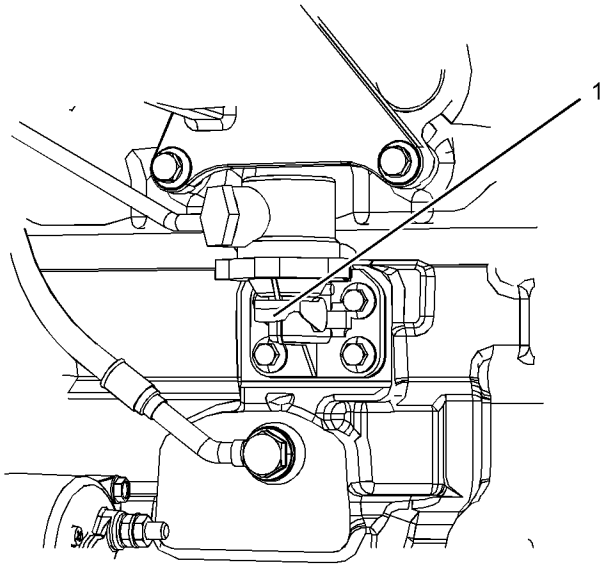

Illustration 54 g03721133
Typical example.

1. Loosen the vent screw on the secondary fuel filter.

Note: The fuel priming pump is mechanically operated by the camshaft. In curtain positions the camshaft lobe can act upon the arm of the fuel priming pump reducing the hand priming pump ability to prime. This condition will be felt as low resistance on the operating arm. Rotating the crankshaft will move the camshaft lobe acting on the priming pump arm. Rotating the camshaft will allow the priming pump full ability to prime.

2. Operate the lever (1) on the priming pump. When fuel free from air can be seen, close the vent screw. Tighten vent screw securely.
3. The fuel injection pump will self vent. Turn the keyswitch to the ON position and operate the lever on the priming pump. Operate the pump by hand for 2 minutes and then stop.
4. Turn the keyswitch to the OFF position and then start the engine. Operate the engine with no load for 60 seconds and then shutdown the engine.
5. Wait 30 seconds and start the engine. This procedure will remove any air that could be trapped within the fuel injection pump. Check for leaks in the fuel system.

Refer to this Operation and Maintenance Manual, “Starting the Engine” for more information.

i05910440

Fuel System Primary Filter (Water Separator) Element - Replace

WARNING

Fuel leaked or spilled onto hot surfaces or electrical components can cause a fire. To help prevent possible injury, turn the start switch off when changing fuel filters or water separator elements. Clean up fuel spills immediately.

NOTICE
Ensure that the engine is stopped before any servicing or repair is performed.

Type 1 Fuel Filter Remove

1. Turn the fuel supply valve (if equipped) to the OFF position before performing this maintenance.
2. Clean the outside of the fuel filter assembly before removal. Install a suitable container below the filter assembly. Drain the water separator. Refer to Operation and Maintenance Manual, “Fuel System Primary Filter/Water Separator - Drain” for the correct procedure.

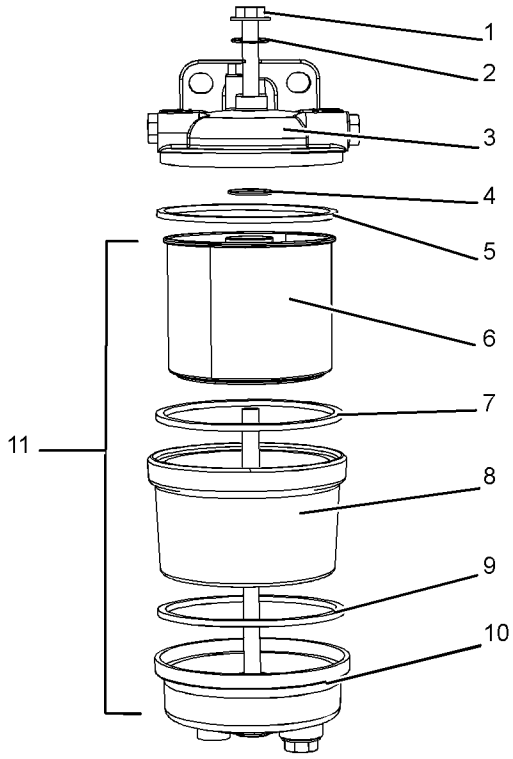

Illustration 55 g03721547
Typical example

3. Hold filter assembly (11) and remove screw (1).
4. Remove lower casing (10) and bowl (8) from canister (6).
5. Remove canister (6) from fuel filter base (3). Separate lower casing (10) from bowl (8).
6. Remove O ring seal (2) from screw (1). Remove O ring seal (4) from filter base (3) and remove O ring seal (5) from filter base. Discard all old O ring seals.
7. Remove O ring seal (7) from bowl (8) and remove O ring seal (9) from lower casing (10). Discard all old O ring seals.
8. Ensure that the bowl and lower casing are clean and free from dirt.

Type 1 Fuel Filter Install

Install new O ring seals.

1. Install O ring seal (2) onto screw (1) and install O ring seal (4) onto filter base. Also, install O ring seal (5) into filter base.
2. Install O ring (9) into lower casing and install O ring (7) into bowl.

3. Assemble lower casing (10) to bowl (8), install canister (6) onto bowl assembly.
4. Install filter assembly (11) into filter base (3) and install the screw (1). Tighten the setscrew to a torque of 5 N·m (44 lb in). Remove container and discard fluid.
5. The secondary filter must be replaced at the same time as the primary filter. Refer to the Operation and Maintenance Manual, “Fuel System Secondary Filter - Replace”.

Type 2 Fuel Filter Remove

1. Turn the fuel supply valve (if equipped) to the OFF position before performing this maintenance.
2. Clean the outside of the fuel filter assembly before removal. Install a suitable container below the filter assembly. Drain the water separator. Refer to Operation and Maintenance Manual, “Fuel System Primary Filter/Water Separator - Drain” for the correct procedure.

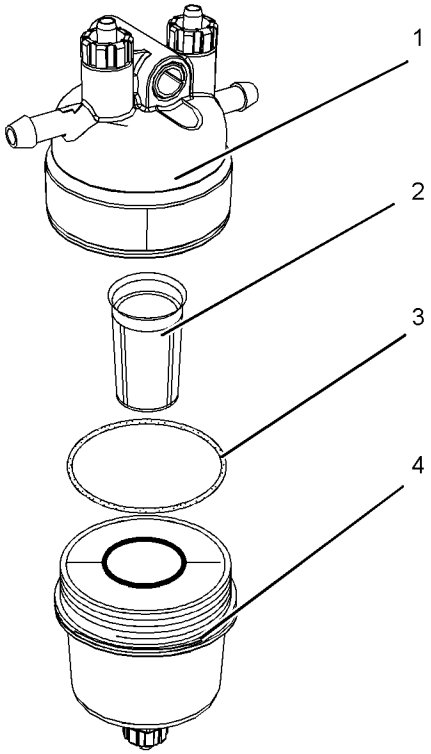

Illustration 56 g03721602

3. Remove filter bowl (4) from filter base (1). Remove O ring seal (3) and filter element (2). Discard O ring seal and filter element.
4. Ensure that the filter bowl is clean and free from dirt.
5. Install O ring seal (3) onto bowl (4) and install element (2).
6. Install bowl assembly on the filter base. Tighten bowl assembly to a torque of 8 N·m (70 lb in). Remove container and discard fluid.
7. The secondary filter must be replaced at the same time as the primary filter. Refer to the Operation and Maintenance Manual, “Fuel System Secondary Filter - Replace”.

i05914093

Fuel System Primary Filter/ Water Separator - Drain

WARNING

Fuel leaked or spilled onto hot surfaces or electrical components can cause a fire. To help prevent possible injury, turn the start switch off when changing fuel filters or water separator elements. Clean up fuel spills immediately.

NOTICE
The water separator is not a filter. The water separator separates water from the fuel. The engine should never be allowed to run with the water separator more than half full. Engine damage may result.

NOTICE
The water separator is under suction during normal engine operation. Ensure that the drain valve is tightened securely to help prevent air from entering the fuel system.

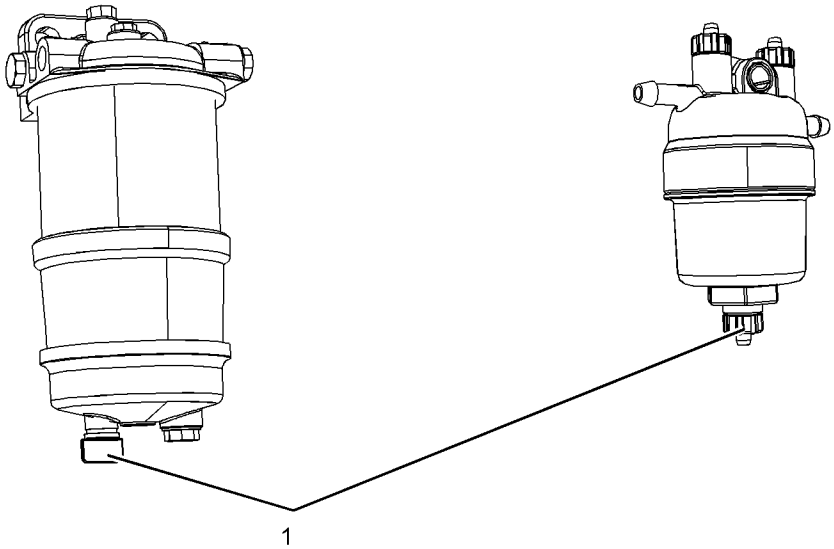

Illustration 57 g03721682
Typical examples

1. Place a suitable container below the water separator.
2. Open the drain (1). Allow the fluid to drain into the container.
3. When clean fuel drains from the water separator close the drain (1). Tighten the drain by hand pressure only. Dispose of the drained fluid correctly.

i10517613

Fuel System Secondary Filter/ Water Separator - Drain

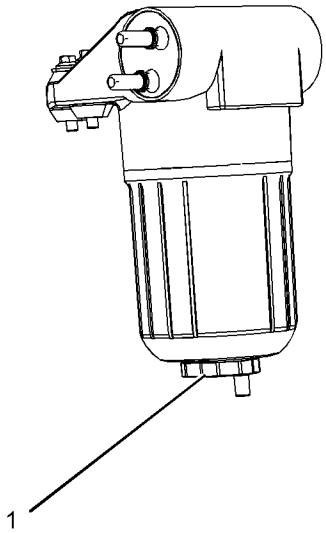

Illustration 58 g03776762
Typical example (Type 1)

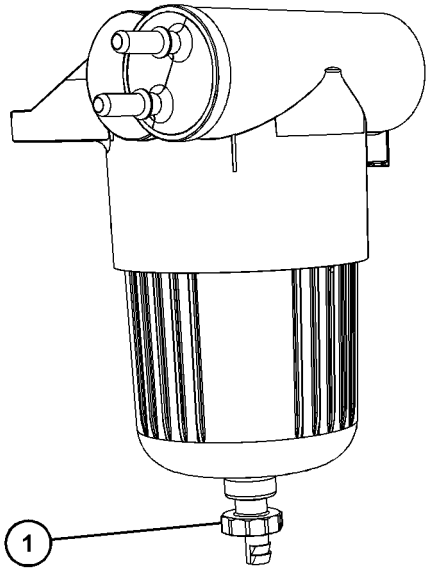

Illustration 59 g07896817
Typical example (Type 2)

The secondary fuel filter that is shown in illustration 58 and illustration 59 has also been designed as a water separator.

1. Place a suitable container below the filter.

2. Open the drain (1) and allow fluid to drain from the filter. When clean fuel can be see close the drain. Tighten the drain by hand pressure only. Dispose of the drained fluid in accordance with local regulations.

i10517618

Fuel System Secondary Filter - Replace

WARNING

Fuel leaked or spilled onto hot surfaces or electrical components can cause a fire. To help prevent possible injury, turn the start switch off when changing fuel filters or water separator elements. Clean up fuel spills immediately.

NOTICE
Do not allow dirt to enter the fuel system. Thoroughly clean the area around a fuel system component that will be disconnected. Fit a suitable cover over any disconnected fuel system components.

NOTICE
Any filling of the fuel filter before installation is not permitted.

There are three different types of secondary fuel filters that can be installed. Turn the valves for the fuel lines (if equipped) to the OFF position before performing this maintenance. Place a tray under the fuel filter in order to catch any fuel that might spill. Clean up any spilled fuel immediately.

Type 1 Secondary Fuel Filter

Clean the outside body of the filter assembly.

Remove the Element

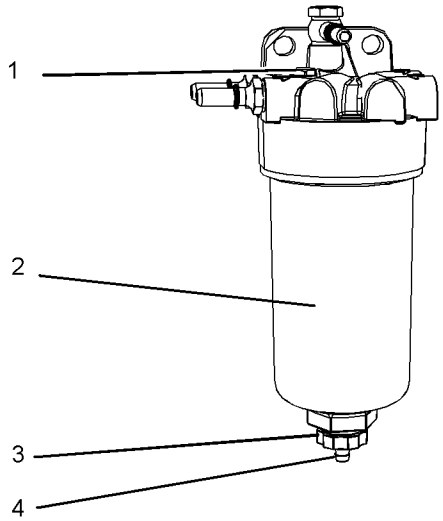

Illustration 60 g03088718
Typical example

1. Install a suitable tube onto drain (4). Open the drain valve (3). Rotate the drain valve counterclockwise. Two full turns are required. Loosen vent screw (1).

2. Allow the fuel to drain into the container and remove the tube.

3. Tighten the vent screw (1) securely.

4. Remove the filter bowl (2). Rotate the filter assembly counterclockwise in order to remove the assembly.

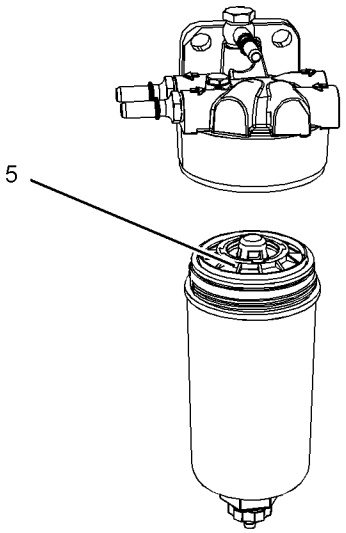

Illustration 61 g02546456
Typical example

5. Rotate the filter element (5) counterclockwise and remove the filter element. Clean the filter bowl.

Install the Element

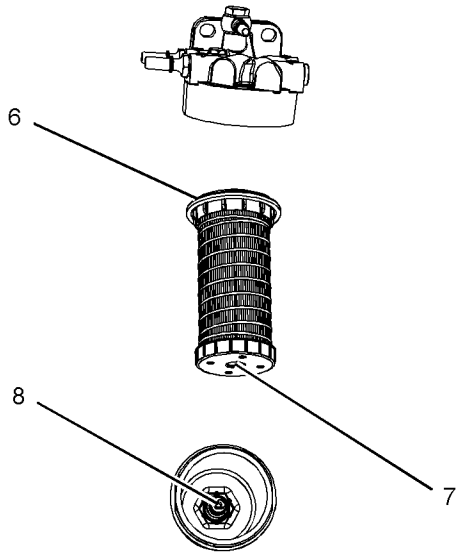

Illustration 62 g03088837
Typical example

1. Make sure filter bowl (2) is clean and has been completely drained before installation.

2. Locate the thread (7) in the filter element onto the threads (8). Spin on the element and tighten the drain valve (3) by hand.

3. Lubricate the O ring seal (6) with clean engine oil. Do NOT fill the filter bowl (2) with fuel before the filter assembly is installed.

4. Do not use a tool in order to install the filter assembly. Tighten the assembly by hand. Install the filter bowl (2). Turn the filter bowl clockwise until the filter bowl locks into position against the stops.

5. If equipped, turn the fuel supply valve to the ON position and remove the container.

6. The primary fuel filter and the secondary fuel filter must be replaced at the same time. Refer to the Operation and Maintenance Manual, “Fuel System Primary Filter (Water Separator) Element - Replace”.

7. Prime the fuel system. Refer to the Operation and Maintenance Manual, “Fuel System - Prime” for more information.

Type 2 Secondary Fuel Filter

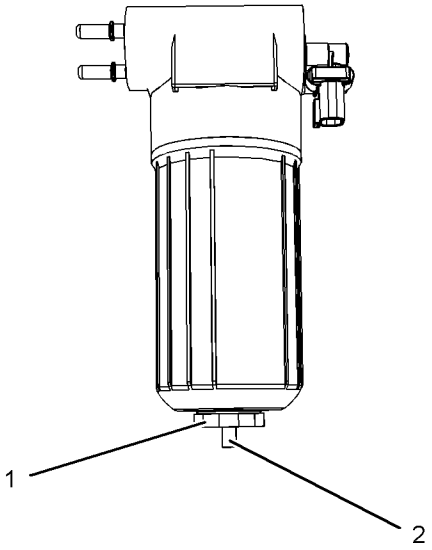

Illustration 63 g03721946
Typical example (Type 2A)

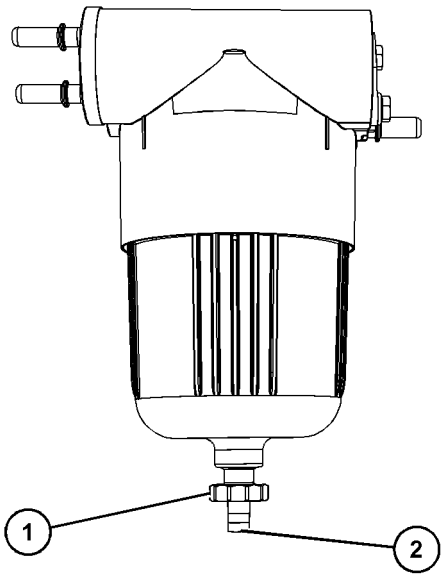

Illustration 64 g07896842
Typical example (Type 2B)

1. Clean the outside body of the filter assembly. Install a suitable tube onto drain (2). Rotate the drain valve (1) counterclockwise. Allow the fuel to drain into the container and remove the tube.

2. Remove the filter bowl (6) from the filter base (3). Press on the element (4). Rotate the element counterclockwise in order to release the element for the filter bowl and remove the element from the bowl. Discard the used element.

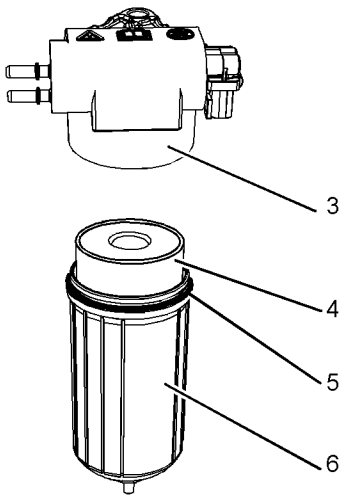

Illustration 65 g03721948
Typical example (Type 2A)

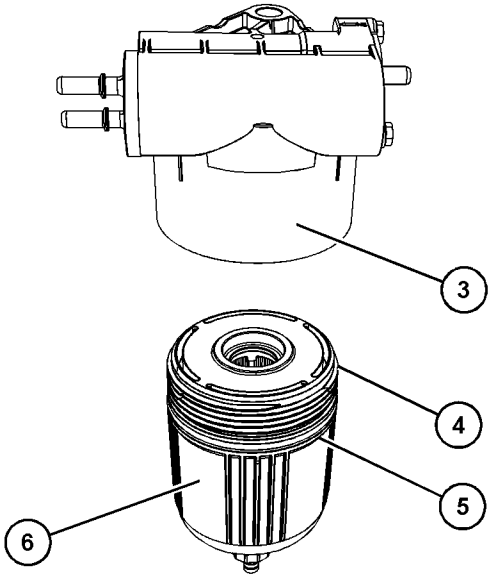

Illustration 66 g07896848
Typical example (Type 2B)

3. Remove the O ring (5) from the filter bowl and clean the filter bowl.

4. Install a new O ring seal (5) to the filter bowl (6).

5. Locate a new filter element (4) into the filter bowl. Press on the element and rotate the element clockwise in order to lock the element into the filter bowl.

6. Install the filter bowl (6) into filter base (3).

7. Tighten the filter bowl by hand until the filter bowl contacts the filter head. Rotate the filter bowl through 90 degrees.

Note: Do not use a tool to tighten the filter bowl.

8. If equipped, turn the fuel supply valve to the ON position and remove the container.

9. The primary fuel filter and the secondary fuel filter must be replaced at the same time. Refer to the Operation and Maintenance Manual, “Fuel System Primary Filter (Water Separator) Element - Replace”.

10. Prime the fuel system. Refer to the Operation and Maintenance Manual, “Fuel System - Prime” for more information.

Type 3 Spin - On Fuel Filter

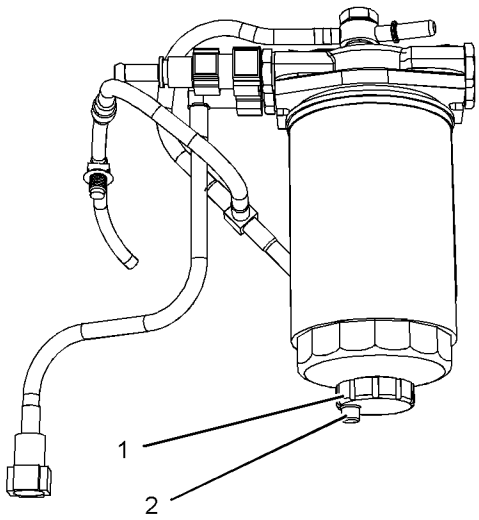

Illustration 67 g03721949
Typical example

1. Clean the outside body of the filter assembly. Install a suitable tube onto drain (2). Rotate the drain valve (1) counterclockwise. Allow the fuel to drain into the container and remove the tube. Ensure that the fuel drain (2) on the new spin-on filter is closed.

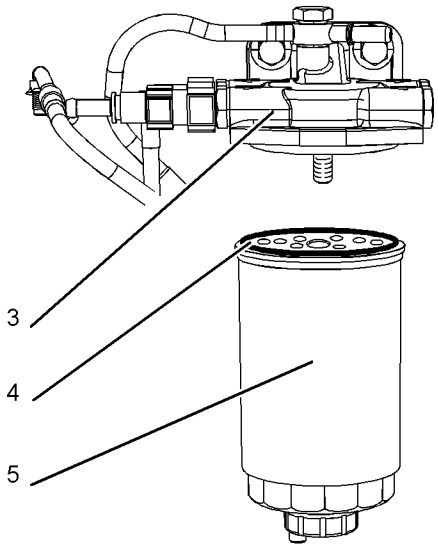

Illustration 68 g03721952
Typical example

2. Use a suitable tool in order to remove the spin-on filter (5) from the filter base (3).

3. Lubricate the sealing ring (4) with clean engine oil.

4. Install the spin-on filter (5) into filter base (1).

5. Tighten the spin-on filter by hand until the sealing ring contacts the filter head. Rotate the spin-on filter through 90 degrees.

6. If equipped, turn the fuel supply valve to the ON position and remove the container.

7. The primary fuel filter the secondary fuel filter must be replaced at the same time. Refer to the Operation and Maintenance Manual, “Fuel System Primary Filter (Water Separator) Element - Replace”.

8. Prime the fuel system. Refer to the Operation and Maintenance Manual, “Fuel System - Prime” for more information.

i02335436

Fuel Tank Water and Sediment - Drain

NOTICE
Care must be taken to ensure that fluids are contained during performance of inspection, maintenance, testing, adjusting and repair of the product. Be prepared to collect the fluid with suitable containers before opening any compartment or disassembling any component containing fluids.

Dispose of all fluids according to local regulations and mandates.

Fuel Tank

Fuel quality is critical to the performance and to the service life of the engine. Water in the fuel can cause excessive wear to the fuel system.

Water can be introduced into the fuel tank when the fuel tank is being filled.

Condensation occurs during the heating and cooling of fuel. The condensation occurs as the fuel passes through the fuel system and the fuel returns to the fuel tank. This causes water to accumulate in fuel tanks. Draining the fuel tank regularly and obtaining fuel from reliable sources can help to eliminate water in the fuel.

Drain the Water and the Sediment

Fuel tanks should contain some provision for draining water and draining sediment from the bottom of the fuel tanks.

Open the drain valve on the bottom of the fuel tank in order to drain the water and the sediment. Close the drain valve.

Check the fuel daily. Allow five minutes after the fuel tank has been filled before draining water and sediment from the fuel tank.

Fill the fuel tank after operating the engine in order to drive out moist air. This will help prevent condensation. Do not fill the tank to the top. The fuel expands as the fuel gets warm. The tank may overflow.

Some fuel tanks use supply pipes that allow water and sediment to settle below the end of the fuel supply pipe. Some fuel tanks use supply lines that take fuel directly from the bottom of the tank. If the engine is equipped with this system, regular maintenance of the fuel system filter is important.

Fuel Storage Tanks

Drain the water and the sediment from the fuel storage tank at the following intervals:

- Weekly
- Service intervals
- Refill of the tank

This will help prevent water or sediment from being pumped from the storage tank into the engine fuel tank.

If a bulk storage tank has been refilled or moved recently, allow adequate time for the sediment to settle before filling the engine fuel tank. Internal baffles in the bulk storage tank will also help trap sediment. Filtering fuel that is pumped from the storage tank helps to ensure the quality of the fuel. When possible, water separators should be used.

i02813964

Hoses and Clamps - Inspect/ Replace

Inspect all hoses for leaks that are caused by the following conditions:

- Cracking
- Softness
- Loose clamps

Replace hoses that are cracked or soft. Tighten any loose clamps.

NOTICE
Do not bend or strike high pressure lines. Do not install bent or damaged lines, tubes or hoses. Repair any loose or damaged fuel and oil lines, tubes and hoses. Leaks can cause fires. Inspect all lines, tubes and hoses carefully. Tighten all connections to the recommended torque. Do not clip any other item to the high pressure lines.

Check for the following conditions:

- End fittings that are damaged or leaking
- Outer covering that is chafed or cut

- Exposed wire that is used for reinforcement
- Outer covering that is ballooning locally
- Flexible part of the hose that is kinked or crushed
- Armoring that is embedded in the outer covering

A constant torque hose clamp can be used in place of any standard hose clamp. Ensure that the constant torque hose clamp is the same size as the standard clamp.

Due to extreme temperature changes, the hose will harden. Hardening of the hoses will cause hose clamps to loosen. This can result in leaks. A constant torque hose clamp will help to prevent loose hose clamps.

Each installation application can be different. The differences depend on the following factors:

- Type of hose
- Type of fitting material
- Anticipated expansion and contraction of the hose
- Anticipated expansion and contraction of the fittings

Replace the Hoses and the Clamps

Refer to the OEM information for further information on removing and replacing fuel hoses (if equipped).

The coolant system and the hoses for the coolant system are not usually supplied by Perkins. The following text describes a typical method of replacing coolant hoses. Refer to the OEM information for further information on the coolant system and the hoses for the coolant system.

WARNING

Pressurized System: Hot coolant can cause serious burns. To open the cooling system filler cap, stop the engine and wait until the cooling system components are cool. Loosen the cooling system pressure cap slowly in order to relieve the pressure.

1. Stop the engine. Allow the engine to cool.
2. Loosen the cooling system filler cap slowly in order to relieve any pressure. Remove the cooling system filler cap.

Note: Drain the coolant into a suitable, clean container. The coolant can be reused.

3. Drain the coolant from the cooling system to a level that is below the hose that is being replaced.
4. Remove the hose clamps.
5. Disconnect the old hose.
6. Replace the old hose with a new hose.
7. Install the hose clamps with a torque wrench.

Note: For the correct coolant, see this Operation and Maintenance Manual, “Fluid Recommendations”.

8. Refill the cooling system. Refer to the OEM information for further information on refilling the cooling system.
9. Clean the cooling system filler cap. Inspect the cooling system filler cap's seals. Replace the cooling system filler cap if the seals are damaged. Install the cooling system filler cap.
10. Start the engine. Inspect the cooling system for leaks.

i09650780

Radiator - Clean

The radiator is not usually supplied by Perkins. The following text describes a typical cleaning procedure for the radiator. Refer to the OEM information for further information on cleaning the radiator.

Note: Adjust the frequency of cleaning according to the effects of the operating environment.

Inspect the radiator for these items: Damaged fins, corrosion, dirt, grease, insects, leaves, oil, and other debris. Clean the radiator, if necessary.

WARNING

Personal injury can result from air pressure.

Personal injury can result without following proper procedure. When using pressure air, wear a protective face shield and protective clothing.

Maximum air pressure at the nozzle must be less than 205 kPa (30 psi) for cleaning purposes.

Pressurized air is the preferred method for removing loose debris. Direct the air in the opposite direction to the air flow of the fan. Hold the nozzle approximately 6 mm (0.25 inch) away from the radiator fins. Slowly move the air nozzle in a direction that is parallel with the radiator tube assembly, which will remove debris that is between the tubes.

Pressurized water may also be used for cleaning. The maximum water pressure for cleaning purposes must be less than 275 kPa (40 psi). Use pressurized water to soften mud. Clean the core from the front and rear.

Use a degreaser and steam for removal of oil and grease. Clean the core from the front and rear. Wash the core with detergent and hot water. Thoroughly rinse the core with clean water.

If the radiator is blocked internally, refer to the OEM Manual for information regarding flushing the cooling system.

After cleaning the radiator, start the engine. Allow the engine to operate at low idle speed for three to five minutes. Accelerate the engine to high idle. Accelerating the engine to high idle will help in the removal of debris and the drying of the core. Slowly reduce the engine speed to low idle and then stop the engine. Use a light bulb behind the core to inspect the core for cleanliness. Repeat the cleaning, if necessary.

Inspect the fins for damage. Bent fins may be opened with a “comb”. Inspect these items for good condition: Welds, mounting brackets, air lines, connections, clamps, and seals. Make repairs, if necessary.

i10573614

Severe Service Application - Check

Severe service is the application of an engine that exceeds the current published standards for that engine. Perkins maintains standards for the following engine parameters:

- Performance such as power range, speed range, and fuel consumption
- Fuel quality
- Operational Altitude
- Maintenance intervals
- Oil selection and maintenance
- Coolant type and maintenance
- Environmental qualities
- Installation
- The temperature of the fluid in the engine

Refer to the standards for the engine or consult your Perkins dealer or your Perkins distributor in order to determine if the engine is operating within the defined parameters.

Severe service operation can accelerate component wear. Engines that operate under severe conditions may need more frequent maintenance intervals in order to ensure maximum reliability and retention of full service life.

Due to individual applications, it is not possible to identify all of the factors which can contribute to severe service operation. Consult your Perkins dealer or your Perkins distributor for the unique maintenance that is necessary for the engine.

The operating environment, incorrect operating procedures and incorrect maintenance procedures can be factors which contribute to a severe service application.

Environmental Factors

Ambient temperatures – The engine may be exposed to extended operation in extremely cold environments or hot environments. Valve components can be damaged by carbon buildup if the engine is frequently started and stopped in very cold temperatures. Extremely hot intake air reduces engine performance.

Quality of the air – The engine may be subjected to extended operation in environments that are dirty, dusty, or contaminated. If the equipment is not cleaned regularly, mud, dirt, and dust can accumulate and encase components, leading to increased wear and maintenance challenges. The ingress of contaminants that affect combustion air quality and exhaust gas composition should be avoided. It is recommended to ensure adequate workplace ventilation and to follow local air quality guidelines and regulations.

Buildup – Compounds, elements, corrosive chemicals and salt can damage some components.

Altitude – Problems can arise when the engine is operated at altitudes that are higher than the intended settings for that application. Necessary adjustments should be made.

Incorrect Operating Procedures

- Extended operation at low idle
- Frequent hot shutdowns
- Operating at excessive loads
- Operating at excessive speeds
- Operating outside the intended application

Incorrect Maintenance Procedures

- Extending the maintenance intervals

- Failure to use recommended fuel, lubricants and coolant/antifreeze

i07888480

Starting Motor - Inspect

Perkins recommends a scheduled inspection of the starting motor. If the starting motor fails, the engine may not start in an emergency situation.

Check the starting motor for correct operation. Check the electrical connections and clean the electrical connections. Refer to the Systems Operation, Testing and Adjusting Manual, “Electric Starting System - Test” for more information on the checking procedure and for specifications consult your Perkins dealer or your Perkins distributor for assistance.

i02184788

Turbocharger - Inspect
(If Equipped)

A regular visual inspection of the turbocharger is recommended. Any fumes from the crankcase are filtered through the air inlet system. Therefore, by-products from oil and from combustion can collect in the turbocharger compressor housing. Over time, this buildup can contribute to loss of engine power, increased black smoke and overall loss of engine efficiency.

If the turbocharger fails during engine operation, damage to the turbocharger compressor wheel and/or to the engine may occur. Damage to the turbocharger compressor wheel can cause additional damage to the pistons, the valves, and the cylinder head.

NOTICE
Turbocharger bearing failures can cause large quantities of oil to enter the air intake and exhaust systems. Loss of engine lubricant can result in serious engine damage.

Minor leakage of oil into a turbocharger under extended low idle operation should not cause problems as long as a turbocharger bearing failure has not occured.

When a turbocharger bearing failure is accompanied by a significant engine performance loss (exhaust smoke or engine rpm up at no load), do not continue engine operation until the turbocharger is renewed.

A visual inspection of the turbocharger can minimize unscheduled downtime. A visual inspection of the turbocharger can also reduce the chance for potential damage to other engine parts.

Removal and Installation

Note: The turbochargers that are supplied are nonserviceable.

For options regarding the removal, installation, and replacement, consult your Perkins dealer or your Perkins distributor. Refer to the Disassembly and Assembly Manual, “Turbocharger - Remove and Turbocharger - Install” for further information.

Inspecting

NOTICE
The compressor housing for the turbocharger must not be removed from the turbocharger for cleaning.

The actuator linkage is connected to the compressor housing. If the actuator linkage is moved or disturbed the engine may not comply with emmissions legislation.

1. Remove the pipe from the turbocharger exhaust outlet and remove the air intake pipe to the turbocharger. Visually inspect the piping for the presence of oil. Clean the interior of the pipes in order to prevent dirt from entering during reassembly.
2. Check for the presence of oil. If oil is leaking from the back side of the compressor wheel, there is a possibility of a failed turbocharger oil seal.

   The presence of oil may be the result of extended engine operation at low idle. The presence of oil may also be the result of a restriction of the line for the intake air (clogged air filters), which causes the turbocharger to slobber.
3. Inspect the bore of the housing of the turbine outlet for corrosion.

4. Fasten the air intake pipe and the exhaust outlet pipe to the turbocharger housing.

i02177973

Walk-Around Inspection

Inspect the Engine for Leaks and for Loose Connections

A walk-around inspection should only take a few minutes. When the time is taken to perform these checks, costly repairs and accidents can be avoided.

For maximum engine service life, make a thorough inspection of the engine compartment before starting the engine. Look for items such as oil leaks or coolant leaks, loose bolts, worn belts, loose connections and trash buildup. Make repairs, as needed:

- The guards must be in the correct place. Repair damaged guards or replace missing guards.
- Wipe all caps and plugs before the engine is serviced in order to reduce the chance of system contamination.

NOTICE
For any type of leak (coolant, lube, or fuel) clean up the fluid. If leaking is observed, find the source and correct the leak. If leaking is suspected, check the fluid levels more often than recommended until the leak is found or fixed, or until the suspicion of a leak is proved to be unwarranted.

NOTICE
Accumulated grease and/or oil on an engine is a fire hazard. Remove the accumulated grease and oil. Refer to this Operation and Maintenance Manual, “Engine - Clean” for more information.

- Ensure that the cooling system hoses are correctly clamped and that the cooling system hoses are tight. Check for leaks. Check the condition of all pipes.
- Inspect the water pump for coolant leaks.

Note: The water pump seal is lubricated by the coolant in the cooling system. It is normal for a small amount of leakage to occur as the engine cools down and the parts contract.

Excessive coolant leakage may indicate the need to replace the water pump seal. For the removal of the water pump and the installation of water pump and/or seal, refer to the Disassembly and Assembly Manual, “Water Pump - Remove and Install” for more information or consult your Perkins dealer or your Perkins distributor.

- Inspect the lubrication system for leaks at the front crankshaft seal, the rear crankshaft seal, the oil pan, the oil filters and the rocker cover.
- Inspect the fuel system for leaks. Look for loose fuel line clamps and/or tie-wraps.
- Inspect the piping for the air intake system and the elbows for cracks and for loose clamps. Ensure that hoses and tubes are not contacting other hoses, tubes, wiring harnesses, etc.
- Inspect the alternator belts and any accessory drive belts for cracks, breaks or other damage.

Belts for multiple groove pulleys must be replaced as matched sets. If only one belt is replaced, the belt will carry more load than the belts that are not replaced. The older belts are stretched. The additional load on the new belt could cause the belt to break.

- Drain the water and the sediment from the fuel tank on a daily basis in order to ensure that only clean fuel enters the fuel system.
- Inspect the wiring and the wiring harnesses for loose connections and for worn wires or frayed wires.
- Inspect the ground strap for a good connection and for good condition.
- Disconnect any battery chargers that are not protected against the current drain of the starting motor. Check the condition and the electrolyte level of the batteries, unless the engine is equipped with a maintenance free battery.
- Check the condition of the gauges. Replace any gauges that are cracked. Replace any gauge that can not be calibrated.

i01907756

Water Pump - Inspect

A failed water pump may cause severe engine overheating problems that could result in the following conditions:

- Cracks in the cylinder head
- A piston seizure
- Other potential damage to the engine

Note: The water pump seal is lubricated by the coolant in the cooling system. It is normal for a small amount of leakage to occur as the engine cools down and parts contract.

Visually inspect the water pump for leaks. Renew the water pump seal or the water pump if there is an excessive leakage of coolant. Refer to the Disassembly and Assembly Manual, “Water Pump - Remove and Install” for the disassembly and assembly procedure.

Warranty Section

Warranty Information

i06590874

Emissions Warranty Information

This engine may be certified to comply with exhaust emission and gaseous emission standards that are prescribed by the law at the time of manufacture. This engine may be covered by an Emissions Warranty. Consult your authorized Perkins dealer or distributor to determine if your engine is emissions certified and if your engine is subject to an Emissions Warranty.

Index

A

After Starting Engine 32
After Stopping Engine 34
Aftercooler Core - Clean/Test..... 57
Aftercooler Core - Inspect 57
Alternator - Inspect 58
Alternator and Fan Belts - Inspect/Adjust/ Replace 58
Adjustment..... 58
Inspection 58
Replacement..... 59

B

Battery - Replace..... 59
Battery Electrolyte Level - Check 59
Battery or Battery Cable - Disconnect..... 60
Before Starting Engine 13, 30
Burn Prevention.....11
Batteries.....11
Coolant 11
Diesel Fuel.....11
Oils.....11

C

Cold Weather Operation 35
Hints for Cold Weather Operation 35
Idling the Engine 36
Recommendations for Coolant Warm Up.... 36
Recommendations for the Coolant..... 36
Viscosity of the Engine Lubrication Oil 36
Cold Weather Starting 31
Cooling System Coolant (Commercial Heavy-Duty) - Change..... 60
Drain 61
Fill 61
Flush 61
Cooling System Coolant (ELC) - Change 62
Drain 62
Fill 63
Flush 63
Cooling System Coolant Level - Check..... 63
Engines With a Coolant Recovery Tank 63
Engines with Factory Installed Radiators 64
Engines Without a Coolant Recovery Tank..... 65
Crushing Prevention and Cutting Prevention.. 13

D

Driven Equipment - Check 66

E

Electrical System 15
Grounding Practices 15
Emergency Stopping 34
Emissions Certification Film 23
Label for compliant engines..... 23
Label for engines that comply with MSHA emissions 24
Label for engines that do not comply with emissions 25
Emissions Warranty Information 91
Engine - Clean..... 66
Engine Air Cleaner Element (Dual Element) - Clean/Replace..... 66
Cleaning the Primary Air Cleaner Elements 67
Servicing the Air Cleaner Elements..... 66
Engine Air Cleaner Element (Single Element) - Inspect/Replace 68
Engine Air Cleaner Service Indicator - Inspect 69
Test the Service Indicator 69
Engine Description 19
Engine Cooling and Lubrication 20
Engine Service Life..... 21
Engine Specifications 19
Engine Ground - Inspect/Clean..... 69
Engine Identification..... 22
Engine Lifting..... 26
Engine Mounts - Inspect..... 69
Engine Oil and Filter - Change 71
Drain the Engine Oil..... 71
Fill the Engine Crankcase..... 73
Replace the Oil Filter 72
Engine Oil Level - Check..... 70
Engine Oil Sample - Obtain..... 70
Obtain the Sample and the Analysis 70
Engine Operation 33
Engine Starting..... 14, 30
Engine Stopping 14, 34
Engine Storage..... 27
Condition for Storage..... 27
Engine Valve Lash - Inspect/Adjust..... 73
Engine Warm-up 33

Variable Speed Engine 33

F

Features and Controls..... 29
Fire Prevention and Explosion Prevention.....11
Ether 13
Fire Extinguisher..... 13
Lines, Tubes, and Hoses 13
Fluid Recommendations 40, 50
ELC Cooling System Maintenance..... 53
Engine Oil 40
General Coolant Information 50
General Lubricant Information..... 40
Fluid Recommendations (Fuel Recommendations) 43
Contamination Control Recommendations for Fuels 50
Diesel Fuel Characteristics..... 45
Diesel Fuel Requirements 44
General Information..... 43
Foreword 4
California Proposition 65 Warning 4
Literature Information 4
Maintenance 4
Maintenance Intervals 5
Operation 4
Overhaul 5
Safety..... 4
Fuel and the Effect from Cold Weather..... 37
Fuel Conservation Practices 33
Fuel Injector - Test/Change 74
Removal and Installation of the Fuel Injectors 75
Fuel Related Components in Cold Weather ... 38
Fuel Filters 38
Fuel Heaters 38
Fuel Tanks 38
Fuel System - Prime..... 75
Engines with Electric Priming Pumps..... 75
Engines with Mechanically Operated Priming Pumps..... 77
Fuel System Primary Filter (Water Separator) Element - Replace..... 78
Type 1 Fuel Filter Remove..... 78
Type 2 Fuel Filter Remove..... 79
Fuel System Primary Filter/Water Separator - Drain 79
Fuel System Secondary Filter - Replace 81
Install the Element 82
Type 1 Secondary Fuel Filter..... 81
Type 2 Secondary Fuel Filter..... 82
Type 3 Spin - On Fuel Filter..... 84
Fuel System Secondary Filter/Water Separator - Drain 80
Fuel Tank Water and Sediment - Drain 85
Drain the Water and the Sediment 85
Fuel Storage Tanks..... 85
Fuel Tank 85

G

Gauges and Indicators 28
General Hazard Information..... 7
Containing Fluid Spillage..... 9
Fluid Penetration 8
Inhalation 9
Pressure Air and Water 8
Static Electricity Hazard when Fueling with Ultra-low Sulfur Diesel Fuel 9

H

Hoses and Clamps - Inspect/Replace..... 85
Replace the Hoses and the Clamps..... 86

I

Important Safety Information..... 2

L

Lifting and Storage 26

M

Maintenance Interval Schedule..... 56
Daily 56
Every 1000 Service Hours..... 56
Every 2000 Service Hours..... 56
Every 3000 Service Hours..... 56
Every 3000 Service Hours or 2 Years 56
Every 4000 Service Hours..... 56
Every 50 Service Hours or Weekly..... 56
Every 500 Service Hours..... 56
Every 500 Service Hours or 1 Year 56
Every 6000 Service Hours or 3 Years 56
When Required..... 56
Maintenance Section..... 39
Model View Illustrations 16
1103 Engine Model Views 18
1104 Engine Model Views 16
Model Views 16
Mounting and Dismounting 13

O

Operation Section..... 26

P

Product Identification Information 22
Product Information Section..... 16

R

Radiator - Clean 86
Reference Numbers 22
Record for Reference 22
Refill Capacities..... 39
Cooling System..... 39
Lubrication System 39

S

Safety Messages..... 6
(1) Universal Warning 6
(2) Ether 6
Safety Section 6
Sensors and Electrical Components..... 29
Coolant Temperature Switch 29
Cybersecurity Information 29
Electronic Control Governor (If equipped)... 29
Engine Oil Pressure Switch 29
Failure of Switches 29
Reporting Cybersecurity Vulnerabilities 29
Serial Number Plate 22
Severe Service Application - Check..... 87
Environmental Factors..... 87
Incorrect Maintenance Procedures 87
Incorrect Operating Procedures 87
Starting Motor - Inspect..... 88
Starting the Engine..... 30
Starting with Jump Start Cables..... 31
Stopping the Engine 34

T

Table of Contents 3
Turbocharger - Inspect (If Equipped) 88
Inspecting 88
Removal and Installation 88

W

Walk-Around Inspection 89
Inspect the Engine for Leaks and for Loose Connections 89
Warranty Information..... 91
Warranty Section 91
Water Pump - Inspect..... 89

Product and Dealer Information

Note: For product identification plate locations, see the section “Product Identification Information” in the Operation and Maintenance Manual.

Delivery Date: _____

Product Information

Model: _____

Product Identification Number: _____

Engine Serial Number: _____

Transmission Serial Number: _____

Generator Serial Number: _____

Attachment Serial Numbers: _____

Attachment Information: _____

Customer Equipment Number: _____

Dealer Equipment Number: _____

Dealer Information

Name: _____ Branch: _____

Address: _____

_____

_____

	Dealer Contact	Phone Number	Hours
Sales:			
Parts:			
Service:			

SEBU7833
©2026 Perkins Engines Company Limited
All Rights Reserved