

826
Landfill Compactor

Technical Specifications

Configurations and features may vary by region. Please consult your Cat® dealer for availability in your area.

Table of Contents

Specifications 2

Engine 2
Operating Specifications 2
Transmission 2
Hydraulic System 2
Service Refill Capacities 2
Axles 2
Brakes 2
Sound Performance 3
Hydraulic System – Steering 3
Dimensions 4
Blade Selection 5
Wheels 5

Standard and Optional Equipment 6

826 Environmental Declaration 8

826 Landfill Compactor Specifications

Engine

Engine Model	Cat® C15	
Emissions	U.S. EPA Tier 4 Final/ EU Stage V/Korea Stage V and Japan 2014 or Brazil MAR-1, emitting equivalent to U.S. EPA Tier 3/EU Stage IIIA	
Rated Speed	1,800 rpm	
Net Power (SAE J1349:2011)	302 kW	405 hp
Net Power (ISO 9249:2007)	302 kW	405 hp
Gross Power (SAE J1995:2014)	324 kW	435 hp
Engine Power (ISO 14396:2002)	318 kW	426 hp
Peak Torque @ 1,300 rpm	2005 N·m	1,479 lbf-ft
Torque Rise	33%	
Bore	137.2 mm	5.4 in
Stroke	171.4 mm	6.7 in
Displacement	15.2 L	927.6 in^3
High Idle Speed	2,300 rpm	
Low Idle Speed	800 rpm	
Maximum Altitude without Derating (U.S. EPA Tier 4 Final/EU Stage V)	2834 m	9,298 ft
Maximum Altitude without Derating (Brazil MAR-1, emitting equivalent to U.S. EPA Tier 3/EU Stage IIIA)	2773 m	9,098 ft

- Net power advertised is the power available at the engine flywheel when the engine is equipped with a fan, air cleaner, clean emissions module and alternator.

Operating Specifications

Operating Weight (Tier 4 Final/Stage V)	40 917 kg	90,207 lb
Operating Weight (Tier 3/Stage IIIA equivalent)	40 454 kg	89,186 lb
Max Operating Weight (Tier 4 Final/Stage V)	41 988 kg	92,568 lb
Max Operating Weight (Tier 3/Stage IIIA equivalent)	41 526 kg	91,549 lb

Transmission

Transmission Type	Planetary – Powershift – ECPC	
Travel Speeds		
Direct Drive Forward 1	6.8 km/h	4.2 mph
Direct Drive Forward 2	12.1 km/h	7.5 mph
Direct Drive Reverse 1	7.8 km/h	4.3 mph
Direct Drive Reverse 2	13.8 km/h	8.6 mph

Hydraulic System

Pump Flow at 1,800 rpm	117 L/min	30.9 gal/min
Main Relief Pressure	26 000 kPa	3,771 psi
Maximum Supply Pressure	24 100 kPa	3,495 psi
Lift System	Double Acting Cylinder	
Bore	120 mm	4.7 in
Stroke	1070 mm	42.1 in

Service Refill Capacities

Cooling System	116 L	30.6 gal
Engine Crankcase	34 L	9.0 gal
Transmission	66 L	17.4 gal
Fuel Tank	782 L	206.6 gal
Diesel Exhaust Fluid (DEF) Tank (Tier 4 Final/Stage V)	32 L	8.5 gal
Differentials and Final Drives – Front	100 L	26.4 gal
Differentials and Final Drives – Rear	110 L	29.1 gal
Hydraulic Tank Only	134 L	35.4 gal

- Cat diesel engines are required to use ULSD (ultra-low sulfur diesel fuel with 15 ppm of sulfur or less) and are compatible* with ULSD blended with the following lower-carbon intensity fuels** up to:
  - ✓ 20% biodiesel FAME (fatty acid methyl ester) ***
  - ✓ 100% renewable diesel, HVO (hydrotreated vegetable oil) and GTL (gas-to-liquid) fuels

Refer to guidelines for successful application. Please consult your Cat dealer or "Caterpillar Machine Fluids Recommendations" (SEBU6250) for details.

* *While Caterpillar engines are compatible with these alternative fuels, some regions may not allow their use.*

** *Tailpipe greenhouse gas emissions from lower-carbon intensity fuels are essentially the same as traditional fuels.*

*** *Engines with no aftertreatment devices are compatible with higher blends, up to 100% biodiesel (for use of blends higher than 20% biodiesel, consult your Cat dealer).*

Axles

Front	Planetary – Fixed
Rear	Planetary – Oscillating
Oscillation Angle	±5°

Brakes

Service Brakes	Multi Disc Wet (Enclosed) 2 WHL
Parking Brake	Drum and Shoe, Spring Applied, Hydraulic Released

Sound Performance

Tier 4 Final/Stage V	
Operator Sound Pressure Level (ISO 6396:2008)	73 dB(A)
Machine Sound Power Level (ISO 6395:2008)	113 dB(A)
Operator Sound Pressure Level (ISO 6396:2008)	72 dB(A)*
Machine Sound Power Level (ISO 6395:2008	110 dB(A)*
Tier 3/Stage IIIA	
Operator Sound Pressure Level (ISO 6396:2008)	73 dB(A)
Machine Sound Power Level (ISO 6395:2008)	113 dB(A)
Operator Sound Pressure Level (ISO 6396:2008)	72 dB(A)*
Machine Sound Power Level (ISO 6395:2008	110 dB(A)*

* Sound suppression equipped

- The machine sound power level was measured according to ISO 6395:2008. The measurement was conducted at 70% of the maximum engine cooling fan speed.
- The operator sound pressure level was measured according to ISO 6396:2008. The measurement was conducted at 70% of the maximum engine cooling fan speed.
- Hearing protection may be needed when the machine is operated with a cab that is not properly maintained or when the doors or windows are open for extended periods or in a noisy environment.

Hydraulic System – Steering

Steering System – Circuit	Pilot Operated, Load Sensing	
Bore	114.3 mm	4.5 in
Stroke	576 mm	22.7 in
Steering System – Pump	Piston – Variable Displacement	
Maximum System Flow	170 L/min @ 1,800 rpm	44.9 gal/min @ 1,800 rpm
Steering Pressure Limited	24 000 kPa	3,481 psi
Vehicle Articulation Angle	86°	

826 Landfill Compactor Specifications

Dimensions

All dimensions are approximate.

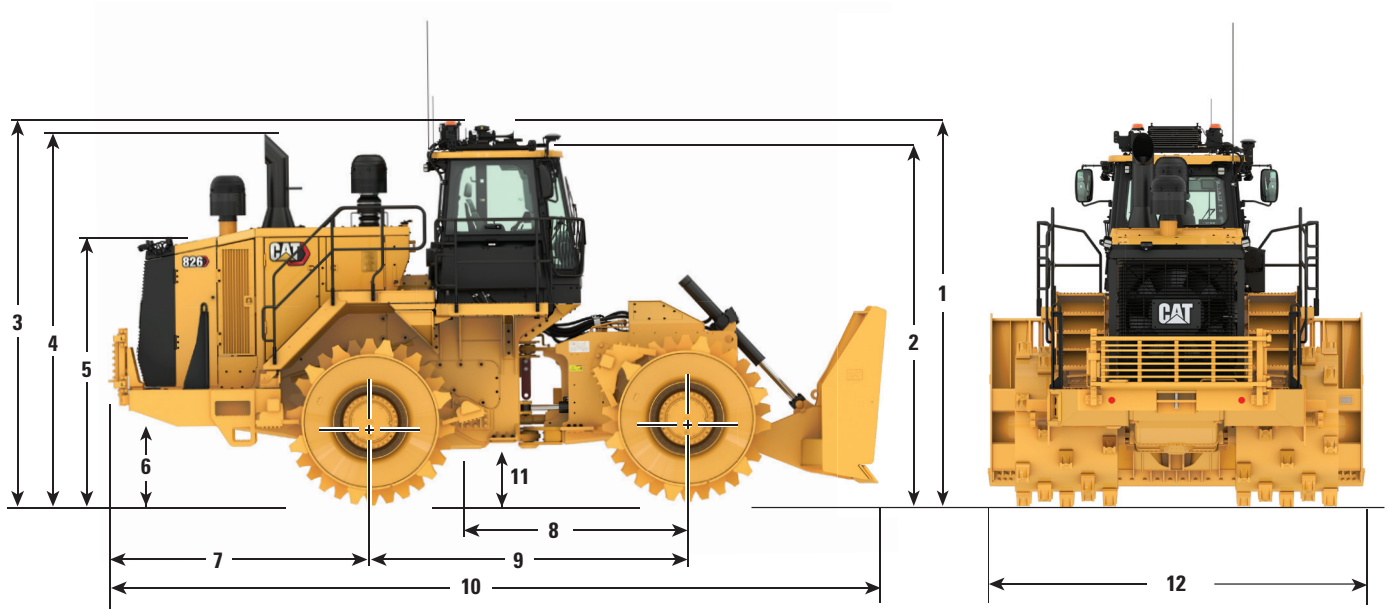

1	Height to Top of A/C Condenser	4537 mm	14 ft 10.6 in
2	Height to Top of Cab Roof	4188 mm	13 ft 8.9 in
3	Height to Top of Beacon	4558 mm	14 ft 11.4 in
4	Height to Top of Exhaust Pipe	4439 mm	14 ft 6.8 in
5	Height to Top of Hood	3312 mm	10 ft 10.4 in
6	Ground Clearance to Bumper	960 mm	3 ft 1.8 in
7	Centerline of Rear Axle to Edge of Counterweight		
	No Rear Radiator Guard	2860 mm	9 ft 4.6 in
	Including Rear Radiator Guard	3096 mm	10 ft 1.9 in
8	Hitch to Centerline of Front Axle	1850 mm	6 ft 1 in
9	Wheelbase	3700 mm	12 ft 2 in
10	Length with Blade on Ground – includes rear radiator guard (straight blade)	8715 mm	28 ft 7.1 in
11	Ground Clearance	642 mm	2 ft 1.3 in
12	Width over Wheels	3800 mm	12 ft 6 in
Turning Radius – inside of wheels		2797 mm	9 ft 2 in

Blade Selection

	Straight Blade		Semi U-blade		U-blade	
Width – Moldboard Length	4311 mm	14 ft 2 in	4462 mm	14 ft 8 in	4331 mm	14 ft 3 in
Width over End Bits	4502 mm	14 ft 9 in	4522 mm	14 ft 10 in	4398 mm	14 ft 5 in
Height with Cutting Edge and Screen	1900 mm	6 ft 2.8 in	2022 mm	6 ft 7.6 in	2019 mm	6 ft 7.5 in
Maximum Depth of Cut	461 mm	1 ft 6 in	619 mm	2 ft 0.4 in	619 mm	2 ft 0.4 in
Maximum Lift above Ground	1277 mm	4 ft 2.3 in	1165 mm	3 ft 9.9 in	1156 mm	3 ft 9.5 in
Capacity, Rated	12.3 m^3	16.1 yd^3	16 m^3	20.9 yd^3	17.5 m^3	22.9 yd^3
Overall Machine Length (includes rear radiator guard, measured to cutting edge)	8715 mm	28 ft 7.1 in	9005 mm	29 ft 6.5 in	9357 mm	30 ft 8.4 in

Wheels

Combination Tips Weight (Group)	9582 kg	21,125 lb
Extended Life Combination Weight (Group)	10 367 kg	22,855 lb
Outside Diameter	1976 mm	77.8 in
Drum Diameter	1610 mm	63.4 in
Plus Tips Weight (Group)	9980 kg	22,002 lb
Extended Life Plus Weight (Group)	11 128 kg	24,533 lb
Outside Diameter	1976 mm	77.8 in
Drum Diameter	1610 mm	63.4 in
Paddle Tips Weight (Group)	9317 kg	20,540 lb
Diamond Tips Weight (Group)	10 885 kg	23,997 lb
Outside Diameter	1971 mm	77.6 in
Outside Diameter – Diamond	1983 mm	78.1 in
Drum Diameter	1610 mm	63.4 in
Drum Width	1200 mm	47.2 in
Feet per Row	6	
Feet per Wheel	30	
Replaceable	Weld On	
Width Over Drums	3800 mm	149.6 in
Tip Height	179 mm	7.0 in
Tip Height – Diamond	184 mm	7.25 in

826 Landfill Compactor Specifications

Standard and Optional Equipment

Standard and optional equipment may vary. Consult your Cat® dealer for details.

	Standard	Optional
POWERTRAIN		
Air-to-air aftercooler	✓	
Axles, no spin front, standard rear		✓
Axles, no spin rear, standard front		✓
Axles, no spin front and rear		✓
Brakes, full hydraulic, enclosed, wet multiple disc service brakes	✓	
Cat® Clean Emission Module (U.S. EPA Tier 4 Final/EU Stage V only)	✓	
Electro hydraulic parking brake	✓	
Electronic Clutch Pressure Control (ECPC)	✓	
Engine, Cat C15 configured for two emissions options: Tier 4 Final/Stage V, or emitting equivalent to U.S. EPA Tier 3/EU Stage IIIA	✓	
Fuel priming pump (electric)	✓	
Fuel-to-air cooler	✓	
Ground-level engine shutoff	✓	
Heat shield, turbo, and exhaust manifold	✓	
Heater, engine coolant, 120V		✓
Heater, engine coolant, 240V		✓
Hydraulically driven demand fan	✓	
Integrated braking	✓	
Muffler under hood (Tier 3/Stage IIIA equivalent only)	✓	
Radiator, Aluminum Modular Radiator (AMR)	✓	
Separated cooling system	✓	
Single Clutch Speed Shifting (SCSS)	✓	
Starting aid (ether)	✓	
Throttle lock	✓	
Torque converter with lockup clutch (LUC)	✓	
Turbine precleaner, engine air intake	✓	
Transmission, planetary with 2F/2R speed range control	✓	
Underhood ventilation system	✓	
ELECTRICAL		
Alarm, backup	✓	
Alternator, 150 amp	✓	
Auxiliary start receptacle	✓	
Batteries, maintenance-free (4-1,000 CCA)	✓	
Converter, 10-15 amp, 24V to 12V	✓	
Electrical system, 24V	✓	
Ground-level lockable master disconnect switch	✓	
Light, warning unswitched (LED strobe)	✓	
Lighting, access stairway	✓	
Lighting system LED (front and rear)	✓	
Lighting, underhood	✓	
Starter, electric (heavy duty)	✓	

	Standard	Optional
OPERATOR ENVIRONMENT		
Cab, sound-suppressed pressurized, radio ready for entertainment includes antenna, speakers, converter (12-volt 10/15-amp) and power port	✓	
Air conditioner with roof-mounted condenser	✓	
Cat Compaction SBAS or RTK Mapping	✓	
Camera, rear vision	✓	
Fingertip shifting controls	✓	
Flip-up armrest	✓	
Glass (window) – rubber-mounted glass	✓	
Heater and defroster	✓	
Horn group (trumpet)	✓	
Hydraulic controls – seat mounted	✓	
Implement hydraulic lockout	✓	
Intermittent wipers (front and rear)	✓	
Instrumentation, gauges: diesel exhaust fluid (DEF) level (Tier 4 Final/Stage V only), engine coolant temperature, fuel level, hydraulic oil temperature, speedometer/tachometer, torque converter temperature	✓	
Instrumentation, warning indicators: action alert system – three categories, brake oil pressure, electrical system – low voltage, engine failure malfunction alert and action lamp, parking brake status	✓	
Internal four-post rollover protective structure/falling objects protective structure (ROPS/FOPS)	✓	
Lights, cab – dome	✓	
Lunchbox and beverage holders	✓	
Mirror, internal (panoramic)	✓	
Mirrors, heated, rearview (externally mounted)	✓	
Precleaner, cab powered	✓	
Radio, AM/FM/Aux/USB/Bluetooth®		✓
Radio, CB (ready)	✓	
Slope Indicate	✓	
Seat belt with minder, retractable, 76 mm (3") wide	✓	
Premium plus seat containing forced air heating and cooling, 2-way thigh adjustment, power lumbar and back bolster adjustment, ride stiffness adjustment, dynamic end dampening, and leather finish	✓	
Steering and Transmission Integrated Control (STIC™) system with lockout	✓	
Transmission gear (indicator)	✓	
Vital Information Management System (VIMS™): graphical information display, external data port, customizable operator profiles, event indicator light on rear grill	✓	
Wet-arm wipers/washers (front and rear)	✓	

Standard and Optional Equipment (continued)

Standard and optional equipment may vary. Consult your Cat dealer for details.

	Standard	Optional
GUARDS		
Guards, axle (front and rear)	✓	
Guard, cab window	✓	
Guards, crankcase and powertrain, hydraulically powered	✓	
Guard, driveshaft	✓	
Guard, differential (front and rear)	✓	
Guards, rear fan and grill		✓
BLADES		
Dozer arrangement (no blade)	✓	
Bulldozer blades		✓
FLUIDS		
Antifreeze, -50° C (-58° F)		✓
Antifreeze, premixed 50% concentration extended life (-34° C/-29° F)	✓	
TECHNOLOGY PRODUCTS		
Product Link™ – Cellular, Satellite	✓	
Corrections Radio, SNR434 or SNR934		✓
WHEELS AND CLEANER BARS		
Wheels and tips: wheel arrangements – 7" combination tips	✓	
Wheels and tips: wheel arrangements – 7.25" diamond tips, 7" paddle tips, 7" plus tips		✓
Wheels and tips: wheel arrangements – 7" extended life plus tips		✓
Wheels and tips: wheel arrangements – 7" extended life combination tips		✓
Striker bars	✓	
Striker bars with cleaner fingers		✓

	Standard	Optional
OTHER STANDARD EQUIPMENT		
DEF Injector phase change tank	✓	
Demand fan/swing out (hydraulic reversible)	✓	
Doors, service access (locking)	✓	
Ecology drains for engine, radiator, transmission, hydraulic tank	✓	
Engine idle management features: – Auto idle kickdown – Delayed engine shutdown – Engine idle shutdown	✓	
Engine, crankcase, 500 hour interval with CJ-4 oil	✓	
Emergency platform egress	✓	
Fire suppression ready	✓	
Fold down exhaust stack for shipping	✓	
Fuel tank, 782 L (207 gal)	✓	
Hitch, drawbar with pin	✓	
Hoses, Cat XT™	✓	
Hydraulic, engine, and transmission oil coolers	✓	
Oil change system, high speed	✓	
Oil sampling valves	✓	
Stairways, fixed – L/R (rear access)	✓	
Stairway, swingout (LH and RH)		✓
Steering, load sensing	✓	
Total hydraulic filtration system	✓	
Vandalism protection caplocks	✓	
Venturi stack	✓	
SPECIAL ARRANGEMENTS		
Engine precleaners – single stage	✓	
Engine precleaners – dual stage		✓
Engine, sound suppression		✓
MISCELLANEOUS		
CE/UKCA Certification (standard where regulations require it)		✓
Plate – year of manufacture (Tier 3/Stage IIIA equivalent only)		✓

826 Landfill Compactor Environmental Declaration

The following information applies to the machine at the time of final manufacture as configured for sale in the regions covered in this document. The content of this declaration is valid as of the date issued; however, content related to machine features and specifications are subject to change without notice. For additional information, please see the machine's Operation and Maintenance Manual.

For more information on sustainability in action and our progress, please visit https://www.caterpillar.com/en/company/sustainability.

Engine

- The Cat® C15 engine is available in configurations that meet U.S. EPA Tier 4 Final, EU Stage V, Korea Stage V, and Japan 2014 or Brazil MAR-1 emitting equivalent to U.S. EPA Tier 3/EU Stage IIIA.
- Cat U.S. EPA Tier 4 Final/EU Stage V diesel engines are required to use ULSD (ultra-low sulfur diesel fuel with 15 ppm of sulfur or less) and are compatible* with ULSD blended with the following lower-carbon intensity fuels** up to:
  - ✓ 20% biodiesel FAME (fatty acid methyl ester)***
  - ✓ 100% renewable diesel, HVO (hydrotreated vegetable oil) and GTL (gas-to-liquid) fuels
- Cat engines meeting Brazil MAR-1, emitting equivalent to U.S. EPA Tier 3/EU Stage IIIA, are compatible with diesel fuel blended with the following lower-carbon intensity fuels up to:
  - ✓ 100% biodiesel FAME (fatty acid methyl ester)****
  - ✓ 100% renewable diesel, HVO (hydrotreated vegetable oil) and GTL (gas-to-liquid) fuels

  Refer to guidelines for successful application. Please consult your Cat dealer or "Caterpillar Machine Fluids Recommendations" (SEBU6250) for details.

** While Caterpillar engines are compatible with these alternative fuels, some regions may not allow their use.*

*** Tailpipe greenhouse gas emissions from lower-carbon intensity fuels are essentially the same as traditional fuels.*

**** Engines with no aftertreatment devices are compatible with higher blends, up to 100% biodiesel.*

*****For use of blends higher than 20% biodiesel, consult your Cat dealer.*

Air Conditioning System

- The air conditioning system on this machine contains the fluorinated greenhouse gas refrigerant R134a or R1234yf. See the label or instruction manual for identification of the gas.
- If equipped with R134a (Global Warming Potential = 1430), the system contains 1.4 kg (3.1 lb) of refrigerant which has a CO_2 equivalent of 2.002 metric tonnes (2.206 tons).

Paint

- Based on best available knowledge, the maximum allowable concentrations, measured in parts per million (PPM), of the following "heavy metals" measured by U.S. Environmental Protection Agency's (EPA) Toxicity Characterization Leaching Procedure, DFR 40, Part 261, Appendix 2, Method 1311 (TCLP), are as follows:
  - – Barium < 100 PPM
  - – Cadmium < 1 PPM
  - – Chromium < 5 PPM
  - – Lead < 5 PPM

Sound Performance

Tier 4 Final/Stage V	
Operator Sound Pressure Level (ISO 6396:2008)	73 dB(A)
Machine Sound Power Level (ISO 6395:2008)	113 dB(A)
Operator Sound Pressure Level (ISO 6396:2008)	72 dB(A)*
Machine Sound Power Level (ISO 6395:2008)	110 dB(A)*
Tier 3/Stage IIIA	
Operator Sound Pressure Level (ISO 6396:2008)	73 dB(A)
Machine Sound Power Level (ISO 6395:2008)	113 dB(A)
Operator Sound Pressure Level (ISO 6396:2008)	72 dB(A)*
Machine Sound Power Level (ISO 6395:2008)	110 dB(A)*

* Sound suppression equipped

- The machine sound power level was measured according to ISO 6395:2008. The measurement was conducted at 70% of the maximum engine cooling fan speed.
- The operator sound pressure level was measured according to ISO 6396:2008. The measurement was conducted at 70% of the maximum engine cooling fan speed.
- Hearing protection may be needed when the machine is operated with a cab that is not properly maintained or when the doors or windows are open for extended periods or in a noisy environment.

Oils and Fluids

- Caterpillar factory fills with ethylene glycol coolants. Cat Diesel Engine Antifreeze/Coolant (DEAC) and Cat Extended Life Coolant (ELC) can be recycled. Consult your Cat dealer for more information.
- Additional fluids are likely to be present, please consult the Operations and Maintenance Manual or the Application and Installation guide for complete fluid recommendations and maintenance intervals.

Features and Technology

- The following features and technology contribute to fuel savings and/or carbon reduction. Features may vary. Consult your Cat dealer for details.
  - – Automatic engine and electrical system shutdown controls conserve fuel by reducing unnecessary idling
  - – Throttle lock reduces fuel burn further by maintaining constant speed and also reduces operator fatigue
  - – Single Clutch Speed Shifting (SCSS) transmission controls deliver greater momentum on grades and saves fuel by carrying that momentum through the shift points
  - – Extended maintenance intervals reduce fluid and filter consumption
  - – Cat clean emissions module includes diesel particulate filter (DPF), diesel oxidation catalyst (DOC), and selective catalytic reduction (SCR) technologies to reduce the engine's emissions



オフロード法２０１４年
基準適合



For more complete information on Cat products, dealer services, and industry solutions, visit us on the web at **www.cat.com.**

Materials and specifications are subject to change without notice. Featured machines in photos may include additional equipment. See your Cat dealer for available options.

© 2026 Caterpillar. All Rights Reserved. CAT, CATERPILLAR, LET'S DO THE WORK, their respective logos, Product Link, HYDO, DEO-ULS, STIC, VIMS, XT, "Caterpillar Corporate Yellow", the "Power Edge" and Cat "Modern Hex" trade dress as well as corporate and product identity used herein, are trademarks of Caterpillar and may not be used without permission.

AEXQ4738-00 (08-2026)
Build number: 11B
(Global)

CAT®