

815
Soil Compactor

Technical Specifications

Configurations and features may vary by region. Please consult your Cat® dealer for availability in your area.

Table of Contents

Specifications 2

Engine 2
Operating Specifications 2
Transmission 2
Hydraulic System Lift/Tilt 2
Hydraulic System – Steering 2
Service Refill Capacities 2
Axles 3
Brakes 3
Air Conditioning System 3
Sound Performance 3
Blades 3
Wheels 3
Dimensions 4

Standard and Optional Equipment 5

815 Environmental Declaration 7

815 Soil Compactor Specifications

Engine

Engine Model	Cat® C7.1	
Emissions (Option 1)	**U.S. EPA Tier 4 Final/EU Stage V**	
Rated Speed	2,200 rpm	
Net Power (SAE J1349:2011)	186 kW	249 hp
Net Power (ISO 9249:2007)	186 kW	249 hp
Gross Power (SAE J1995:2014)	212 kW	284 hp
Engine Power (ISO 14396:2002)	205 kW	275 hp
Peak Torque @ 1,400 rpm	1223 N·m	902 lbf-ft
Torque Rise	52%	

- Net power available at flywheel when the engine is equipped with fan, air cleaner, aftertreatment, and alternator with engine speed at 2,200 rpm.

Emissions (Option 2)	**Brazil MAR-1, emitting equivalent to U.S. EPA Tier 3/EU Stage IIIA**	
Rated Speed	2,200 rpm	
Net Power (SAE J1349:2011)	186 kW	249 hp
Net Power (ISO 9249:2007)	186 kW	249 hp
Gross Power (SAE J1995:2014)	213 kW	286 hp
Engine Power (ISO 14396:2002)	205 kW	275 hp
Peak Torque @ 1,400 rpm	1016 N·m	749 lbf-ft
Torque Rise	26%	

- Net power available at the flywheel when the engine is equipped with fan, air cleaner, muffler, and alternator with engine speed at 2,200 rpm.

Bore	105 mm	4.1 in
Stroke	135 mm	5.3 in
Displacement	7.01 L	427.8 in^3
High Idle Speed	2,270 rpm	
Low Idle Speed	800 rpm	
Maximum Altitude without Derating	3000 m	9,842.5 ft

Operating Specifications

Operating Weight (Tier 4 Final/Stage V)	22 522 kg	49,652 lb
Operating Weight (Tier 3/Stage IIIA equivalent)	22 232 kg	49,013 lb

Transmission

Transmission Type	Cat Planetary Power Shift	
Forward – First	6.3 km/h	3.9 mph
Forward – Second	10.8 km/h	6.7 mph
Forward – Third	18.2 km/h	11.3 mph
Reverse – First	7.2 km/h	4.5 mph
Reverse – Second	12.4 km/h	7.7 mph
Reverse – Third	18.4 km/h	11.4 mph

Hydraulic System Lift/Tilt

Lift/Tilt System – Circuit	Pilot Operated Load Sensing Valve with EH	
Lift/Tilt System	Variable Displacement Piston	
Max Flow at 2,200 rpm	89 L/min	23.5 gal/min
Relief Valve Setting – Lift/Tilt	22 000 kPa	3,190 psi
Cylinders, Double Acting: Lift, Bore, Stroke	101.6 mm × 627 mm	4.0 in × 24.7 in
Cylinders, Double Acting: Left and Right Tilt, Bore, Stroke	101.6 mm × 167 mm	4.0 in × 6.6 in
Pilot System	Open Center, Fixed Displacement Gear	
Pilot Relief Valve Setting	21 000 kPa	3,046 psi

Hydraulic System – Steering

Steering System- Circuit	Pilot, Load Sensing	
Steering System- Pump	Variable Displacement Piston	
Max Flow @ 2,200 rpm	147 L/min	38.8 gal/min
Relief Valve Setting - Steering	27 600 kPa	4,003 psi
Total Steering Angle	84°	
Steering Cycle Time (high idle)	3.0 sec	
Steering Cycle Time (low idle)	8.2 sec	

Service Refill Capacities

Fuel Tank	500 L	132.1 gal
Diesel Exhaust Fluid (DEF) Tank	16 L	4.2 gal
Cooling Systems – Tier 4 Final/Stage V	81 L	21.4 gal
Cooling Systems – Tier3/Stage IIIA Equivalent	73 L	19.3 gal
Engine Crankcase	20 L	5.3 gal
Transmission	56 L	14.8 gal
Differentials and Final Drives – Front	65 L	17.2 gal
Differentials and Final Drives – Rear	65 L	17.2 gal
Hydraulic System – Implement/Steering	175 L	46.2 gal
Hydraulic Tank Only	75 L	19.8 gal

- Cat diesel engines are required to use ULSD (ultra-low sulfur diesel fuel with 15 ppm of sulfur or less) and are compatible* with ULSD blended with the following lower-carbon intensity fuels** up to:
  - ✓ 20% biodiesel FAME (fatty acid methyl ester) ***
  - ✓ 100% renewable diesel, HVO (hydrotreated vegetable oil) and GTL (gas-to-liquid) fuels

Refer to guidelines for successful application. Please consult your Cat dealer or "Caterpillar Machine Fluids Recommendations" (SEBU6250) for details.

* *While Caterpillar engines are compatible with these alternative fuels, some regions may not allow their use.*

** *Tailpipe greenhouse gas emissions from lower-carbon intensity fuels are essentially the same as traditional fuels.*

*** *Engines with no aftertreatment devices are compatible with higher blends, up to 100% biodiesel (for use of blends higher than 20% biodiesel, consult your Cat dealer).*

Axles

Front	Planetary – Fixed
Rear	Planetary – Oscillating
Oscillation Angle	±10°

Brakes

Service Brakes	Single Disc Wet (Enclosed) 2 WHL
Parking Brake	Drum and Shoe, Spring Applied, Hydraulic Released

Air Conditioning System

- The air conditioning system on this machine contains the fluorinated greenhouse gas refrigerant R134a or R1234yf. See the label or instruction manual for identification of the gas.
- If equipped with R134a (Global Warming Potential = 1430), the system contains 1.9 kg (4.2 lb) of refrigerant which has a CO_2 equivalent of 2.717 metric tonnes (2.994 tons).

Sound Performance

Tier 4 Final/Stage V	
Operator Sound Pressure Level (ISO 6396:2008)	72 dB(A)
Machine Sound Power Level (ISO 6395:2008)	112 dB(A)
Machine Sound Power Level (ISO 6395:2008)	109 dB(A)***
Operator Sound Pressure Level (ISO 6396:2008)	70 dB(A)*
Machine Sound Power Level (ISO 6395:2008)	107 dB(A)**
Tier 3/Stage IIIA	
Operator Sound Pressure Level (ISO 6396:2008)	72 dB(A)
Machine Sound Power Level (ISO 6395:2008)	112 dB(A)
Operator Sound Pressure Level (ISO 6396:2008)	70 dB(A)***
Machine Sound Power Level (ISO 6395:2008)	110 dB(A)***

*For machines in European Union countries and in countries that adopt the "EU Directives" and "UK Directives"

**European Union Directive "2000/14/EC" and UK Noise Regulation 2001 No. 1701

***Sound suppression equipped

- The machine sound power level was measured according to ISO 6395:2008. The measurement was conducted at 100% of the maximum engine cooling fan speed.
- The operator sound pressure level was measured according to ISO 6396:2008. The measurement was conducted at 100% of the maximum engine cooling fan speed.
- Hearing protection may be needed when the machine is operated with a cab that is not properly maintained or when the doors or windows are open for extended periods or in a noisy environment.

Blades

Straight Blade		
Capacity	2.06 m^3	2.69 yd^3
Overall Width	3761 mm	12.3 ft
Height	860 mm	2.8 ft
Digging Depth	222 mm	0.7 ft
Ground Clearance	802 mm	2.6 ft
Maximum Tilt	346 mm	1.1 ft
Turning Radius – Outside Corner of Blade	6437 mm	21.1 ft
Turning Radius – Inside Face of Push Arm	2520 mm	8.3 ft
Weight	800 kg	1,764 lb
Total Operating Weight	22 522 kg	49,652 lb

Wheels

Tamping Foot		
Weight (Group)	4409 kg	9,720 lb
Outside Diameter	1412 mm	55.6 in
Drum Diameter	1029 mm	40.5 in
Drum Width	991 mm	39.0 in
Feet per Row	12	
Feet per Wheel	60	
Replaceable	Weld On	
Width Over Drums	3243 mm	127.7 in
Width Between Drums	1261 mm	49.6 in
Tip Height	192 mm	7.5 in

815 Soil Compactor Specifications

Dimensions

All dimensions are approximate.

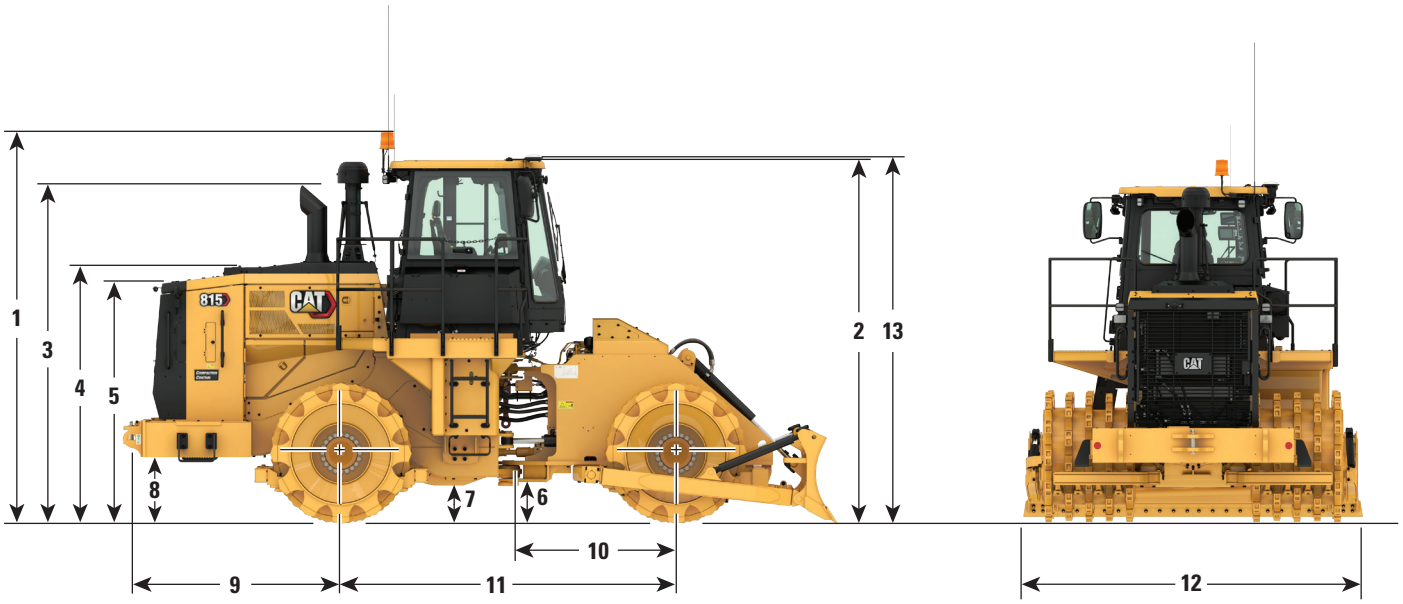

1	Height to Top of Beacon	3933 mm	12.9 ft
2	Height to Top of Cab Roof	3650 mm	12.0 ft
3	Height to Top of Exhaust Pipe	3394 mm	11.1 ft
4	Height to Top of Hood	2616 mm	8.6 ft
5	Height to Top of Radiator Guard	2405 mm	7.9 ft
6	Ground Clearance to Hitch	365 mm	1.2 ft
7	Ground Clearance to Transmission Guard	375 mm	1.2 ft
8	Ground Clearance to Bottom of Bumper	665 mm	2.2 ft
9	Centerline of Rear Axle to Bumper	1990 mm	6.5 ft
10	Centerline of Front Axle to Hitch	1675 mm	5.5 ft
11	Wheelbase	3350 mm	11.0 ft
12	Width Over Platform	3140 mm	10.3 ft
13	Height to Top of GPS Antenna	3701 mm	12.1 ft

Standard and Optional Equipment

Standard and optional equipment may vary. Consult your Cat® dealer for details.

	Standard	Optional
POWERTRAIN		
Advanced Productivity Electronic Control System (APECS)	✓	
Air-to-air aftercooler	✓	
Axles – standard open front and rear	✓	
Axles – open front no-spin rear		✓
Brakes, full hydraulic, enclosed, wet multiple disc service brakes	✓	
Cat® Clean Emission Module (U.S. EPA Tier 4 Final/EU Stage V only)	✓	
Electro-hydraulic parking brake	✓	
Electronic Clutch Pressure Control (ECPC)	✓	
Engine, Cat C7.1 configured for one of two emissions options: Tier 4 Final/Stage V or emitting equivalent to U.S. EPA Tier 3/ EU Stage IIIA	✓	
Engine driven cooling fan – suction	✓	
Fuel priming pump (electric)	✓	
Fuel-to-air cooler	✓	
Ground level engine shut down	✓	
Heater, engine coolant, 120V		✓
Heater, engine coolant, 240V		✓
Muffler under hood (Tier 3/Stage IIIA equivalent only)	✓	
Radiator, unit core	✓	
Starting aid (ether)	✓	
Throttle lock	✓	
Torque converter	✓	
Transmission, planetary, with 3F/3R speed range control	✓	
ELECTRICAL		
Alarm, back-up	✓	
Alternator, 150 amp	✓	
Auxiliary start receptacle	✓	
Batteries, maintenance-free	✓	
Electrical system, 24V	✓	
Ground-level lockable battery disconnect switch	✓	
Lights, directional (rear)	✓	
Lights, LED	✓	
Lights, warning switched (LED strobe)	✓	
Lighting system (front and rear)	✓	
Starter, electric	✓	
OPERATOR ENVIRONMENT		
12V power port for mobile phone or laptop connection	✓	
Air conditioner	✓	
Cab, sound-suppressed pressurized	✓	

	Standard	Optional
OPERATOR ENVIRONMENT (CONTINUED)		
Cab door, sliding window (LH)	✓	
Cab glass, laminated and tinted, rubber mounted	✓	
Camera, rear vision	✓	
Cat Detect: object detection (ready)	✓	
Coat and hard hat hooks	✓	
Electro-hydraulic controls (seat mounted)	✓	
Fingertip shifting controls	✓	
Flip-up armrest	✓	
Heater and defroster	✓	
Horn, electric	✓	
Implement hydraulic lockout	✓	
Instrumentation, gauges: Diesel exhaust fluid (DEF) level (Tier 4 Final/Stage V only), engine coolant temperature, fuel level, hydraulic oil temperature, speedometer/tachometer, torque converter temperature	✓	
Instrumentation, warning indicators: action alert system – three categories, brake oil pressure, electrical system – low voltage, engine failure malfunction alert and action lamp, parking brake status	✓	
Internal four-post rollover protective structure/falling objects protective structure (ROPS/FOPS)	✓	
Light, cab, dome	✓	
Lunchbox and beverage holders	✓	
Mirrors, heated, rearview (externally mounted)	✓	
Mirror, internal (panoramic)	✓	
Precleaner (cab) – powered	✓	
Premium plus seat containing forced air heating and cooling, 2-way thigh adjustment, power lumbar and back bolster adjustment, ride stiffness adjustment, dynamic end dampening, and leather finish	✓	
Radio, AM/FM/Aux/USB/Bluetooth®		✓
Radio, CB (ready)	✓	
Radio ready for entertainment: antenna, speakers, converter (12V, 10-15 amp)	✓	
Seat belt with minder, retractable, 76 mm (3 in) wide	✓	
Slope Indicate	✓	
Steering and Transmission Integrated Control (STIC™) system with lockout	✓	
Sun visor, front	✓	
Transmission gear (indicator)	✓	

(Continued on next page)

815 Soil Compactor Standard and Optional Equipment

Standard and Optional Equipment (continued)

Standard and optional equipment may vary. Consult your Cat dealer for details.

	Standard	Optional
OPERATOR ENVIRONMENT (CONTINUED)		
Vital Information Management System (VIMS™): graphical information display, external data port, customizable operator profiles, event indicator light on rear grill	✓	
Wet-arm wipers/washers (front and rear): intermittent wipers (front and rear)	✓	
GUARDS		
Guards, crankcase and powertrain	✓	
Guard, driveshaft	✓	
FLUIDS		
Antifreeze, -50° C (-58° F)		✓
Antifreeze, premixed 50% concentration extended life (-34° C/-29° F)	✓	
OTHER STANDARD EQUIPMENT		
Doors, service access (locking)	✓	
Ecology drains for engine, radiator, transmission, hydraulic tank	✓	
Engine, crankcase, 500 hour interval with CJ-4 oil	✓	
Emergency egress	✓	
Fire suppression ready	✓	
Fuel tank, 500 L (132.1 gal)	✓	
Hitch, drawbar with pin	✓	
Hoses, Cat XT™	✓	
Hydraulic, engine, and transmission oil coolers	✓	
Oil change system, high speed	✓	
Oil sampling valves	✓	

	Standard	Optional
OTHER STANDARD EQUIPMENT		
Steering, load sensing	✓	
Total hydraulic filtration system	✓	
Vandalism protection caplocks	✓	
Venturi stack	✓	
TECHNOLOGY PRODUCTS		
Cat Compaction SBAS or RTK Mapping	✓	
Compaction control, basic	✓	
Product Link™ – cellular, satellite		✓
OTHER ATTACHMENTS		
Sound suppression – low (required for Brazil)		✓
Sound suppression – EU (required for EU)		✓
MISCELLANEOUS		
CE/UKCA Certification (standard where regulations require it) (U.S. EPA Tier 4 Final/EU Stage V only)		✓
Plate – year of manufacture (standard where regulations require it)		✓
SPECIAL ARRANGEMENTS		
Engine precleaners – turbine	✓	
FUEL SYSTEMS		
Fuel tank – non-fast	✓	
Fuel tank – fast fill		✓
WHEELS AND CLEANER BARS		
Standard tips	✓	
Abrasive tips		✓
Wheels, tamping foot	✓	
BLADES		
Hydraulic tilt – straight blade	✓	

815 Environmental Declaration

The following information applies to the machine at the time of final manufacture as configured for sale in the regions covered in this document. The content of this declaration is valid as of the date issued; however, content related to machine features and specifications are subject to change without notice. For additional information, please see the machine's Operation and Maintenance Manual.

For more information on sustainability in action and our progress, please visit https://www.caterpillar.com/en/company/sustainability.

Engine

- The Cat® C7.1 engine is available in configurations that meet U.S. EPA Tier 4 Final and EU Stage V emission standards or Brazil MAR-1, emitting equivalent to U.S. EPA Tier 3/EU Stage IIIA.
- Cat U.S. EPA Tier 4 Final and EU Stage V diesel engines are required to use ULSD (ultra-low sulfur diesel fuel with 15 ppm of sulfur or less) and are compatible* with ULSD blended with the following lower-carbon intensity fuels** up to:
  - ✓ 20% biodiesel FAME (fatty acid methyl ester)***
  - ✓ 100% renewable diesel, HVO (hydrotreated vegetable oil) and GTL (gas-to-liquid) fuels
- Cat engines meeting Brazil MAR-1, emitting equivalent to U.S. EPA Tier 3/EU Stage IIIA, are compatible with diesel fuel blended with the following lower-carbon intensity fuels up to:
  - ✓ 100% biodiesel FAME (fatty acid methyl ester)****
  - ✓ 100% renewable diesel, HVO (hydrotreated vegetable oil) and GTL (gas-to-liquid) fuels

  Refer to guidelines for successful application. Please consult your Cat dealer or "Caterpillar Machine Fluids Recommendations" (SEBU6250) for details.

* *While Caterpillar engines are compatible with these alternative fuels, some regions may not allow their use.*

** *Tailpipe greenhouse gas emissions from lower-carbon intensity fuels are essentially the same as traditional fuels.*

*** *Engines with no aftertreatment devices are compatible with higher blends, up to 100% biodiesel.*

**** *For use of blends higher than 20% biodiesel, consult your Cat dealer.*

Air Conditioning System

- The air conditioning system on this machine contains the fluorinated greenhouse gas refrigerant R134a or R1234yf. See the label or instruction manual for identification of the gas.
- If equipped with R134a (Global Warming Potential = 1430), the system contains 1.9 kg (4.2 lb) of refrigerant which has a CO_2 equivalent of 2.717 metric tonnes (2.994 tons).

Paint

- Based on best available knowledge, the maximum allowable concentrations, measured in parts per million (PPM), of the following "heavy metals" measured by U.S. Environmental Protection Agency's (EPA) Toxicity Characterization Leaching Procedure, DFR 40, Part 261, Appendix 2, Method 1311 (TCLP), are as follows:
  - – Barium < 100 PPM
  - – Cadmium < 1 PPM
  - – Chromium < 5 PPM
  - – Lead < 5 PPM

Sound Performance

Tier 4 Final/Stage V	
Operator Sound Pressure Level (ISO 6396:2008)	72 dB(A)
Machine Sound Power Level (ISO 6395:2008)	112 dB(A)
Machine Sound Power Level (ISO 6395:2008)	109 dB(A)***
Operator Sound Pressure Level (ISO 6396:2008)	70 dB(A)*
Machine Sound Power Level (ISO 6395:2008)	107 dB(A)**
Tier 3/Stage IIIA	
Operator Sound Pressure Level (ISO 6396:2008)	72 dB(A)
Machine Sound Power Level (ISO 6395:2008)	112 dB(A)
Operator Sound Pressure Level (ISO 6396:2008)	70 dB(A)***
Machine Sound Power Level (ISO 6395:2008)	110 dB(A)***

*For machines in European Union countries and in countries that adopt the "EU Directives" and "UK Directives"

**European Union Directive "2000/14/EC" and UK Noise Regulation 2001 No. 1701

***Sound suppression equipped

- The machine sound power level was measured according to ISO 6395:2008. The measurement was conducted at 100% of the maximum engine cooling fan speed.
- The operator sound pressure level was measured according to ISO 6396:2008. The measurement was conducted at 100% of the maximum engine cooling fan speed.
- Hearing protection may be needed when the machine is operated with a cab that is not properly maintained or when the doors or windows are open for extended periods or in a noisy environment.

Oils and Fluids

- Caterpillar factory fills with ethylene glycol coolants. Cat Diesel Engine Antifreeze/Coolant (DEAC) and Cat Extended Life Coolant (ELC) can be recycled. Consult your Cat dealer for more information.
- Additional fluids are likely to be present, please consult the Operations and Maintenance Manual or the Application and Installation guide for complete fluid recommendations and maintenance intervals.

Features and Technology

- The following features and technology may contribute to fuel savings and/or carbon reduction. Features may vary. Consult your Cat dealer for details.
  - – Automatic engine and electrical system shutdown controls conserve fuel by reducing unnecessary idling
  - – Throttle lock reduces fuel burn further by maintaining constant speed and also reduces operator fatigue
  - – Advanced Productivity Electronic Control System (APECS) transmission controls deliver greater momentum on grades and saves fuel by carrying that momentum through the shift points
  - – Extended maintenance intervals reduce fluid and filter consumption
  - – Cat Clean Emissions Module includes Diesel Particulate Filter (DPF), Diesel Oxidation Catalyst (DOC), and Selective Catalytic Reduction (SCR) technologies to reduce the engine's emissions



オフロード法２０１４年
基準適合



For more complete information on Cat products, dealer services, and industry solutions, visit us on the web at **www.cat.com.**

Materials and specifications are subject to change without notice. Featured machines in photos may include additional equipment. See your Cat dealer for available options.

© 2026 Caterpillar. All Rights Reserved. CAT, CATERPILLAR, LET'S DO THE WORK, their respective logos, DEO-ULS, HYDO, VIMS, Product Link, XT, STIC, "Caterpillar Corporate Yellow", the "Power Edge" and Cat "Modern Hex" trade dress as well as corporate and product identity used herein, are trademarks of Caterpillar and may not be used without permission.

AEXQ4735-00 (08-2026)
Build Number: 11B
(Global)

CAT®