

CAT® 785(04)

OFF-HIGHWAY TRUCK BARE CHASSIS

Caterpillar offers off-highway truck bare chassis designed for specialty machines in a variety of applications — including water trucks, tow tractors, and fuel / lube trucks. When configured as a water truck, the chassis can be equipped with the Cat® Water Delivery System (WDS) from factory and a 32,000 gallon (121 133 liter) capacity water tank from a 3rd party provider.

These partial machine configurations allow construction, quarry, and mining customers to purchase complete solutions from our global Cat® dealer network — with support every step of the way.

PROVEN CAT® TRUCK PLATFORM

Cat trucks are built for durability, reliability, and efficiency to deliver the performance you need in some of the toughest applications around the world.

APPLICATION-SPECIFIC CAB & ROPS CERTIFICATION

Cat Off-Highway Truck Bare Chassis ROPS is certified to ISO 3471 Tractor criteria, to provide a higher level of protection for towing applications.

CUSTOMIZATION FOR YOUR APPLICATION

Cat bare chassis can be customized for your application — including water trucks, tow tractors, and fuel / lube trucks.

POWER TO THE GROUND

The Cat 6-speed planetary power shift transmission is matched with the direct-injection 3512C engine to deliver constant power over a wide range of operating speeds and is built tough for long life between overhauls.

SERVICE WITH EASE

Easy maintenance procedures ensure high reliability and long life with low operating costs. Easy access to daily service points simplifies servicing and reduces time spent on regular maintenance procedures.

SUPPORTED BY THE CAT DEALER NETWORK

- Full support of Cat dealer and parts network
- Cat dealer installation & retrofit kits available
- Eligible for Equipment Protection Plans (EPP) & Customer Value Agreements (CVAs)

785 (04) OFF-HIGHWAY TRUCK BARE CHASSIS SPECIFICATIONS

Configurations and features may vary by region. Please consult your Cat® dealer for availability in your area.

Engine

Engine Model	Cat® 3512C HD-EUI	
Rated Engine Speed	1,750 rpm	
Gross Power – SAE J1995:2014	1082 kW	1,450 hp
Emissions Rating	Fuel Optimized	
Bore	170 mm	6.7 in
Stroke	215 mm	8.4 in
Displacement	58.56 L	3,573.6 in^3

- Net Power advertised is the power available at the flywheel when the engine is equipped with air intake system, exhaust system, and alternator.
- Ratings based on standard air conditions of 25° C (77° F) and 99 kPa (29.32 Hg) dry barometer. Power based on fuel having API gravity of 35 at 16° C (60° F) and an LHV of 42 780 kJ/kg (18,390 BTU/lb) when engine used at 30 °C (86 °F).
- No engine derating required up to 4267 m (14,000 ft) altitude.

Weights – Approximate

Rated Gross Machine Weight (RGMW)	249 476 kg	550,000 lb
Nominal Rated Payload (NRP)	145 tonnes	160 tons

- Consult your tire manufacturer for maximum tire load.

Weight Distributions – Approximate

Front Axle – Empty*	47.5%
Front Axle – Loaded	32.6%
Rear Axle – Empty*	52.5%
Rear Axle – Loaded	67.4%

*Depends on configuration.

Operating Weights – with Hoist Cylinders

Bare Chassis Weight	82 022 kg	180,827 lb
Payload	167 454 kg	369,173 lb
Gross Vehicle Weight	249 476 kg	550,000 lb
Front Axle Bare Chassis Weight	43 677 kg	96,290 lb
Front Axle Payload	39 399 kg	86,860 lb
Front Axle Gross Vehicle Weight	83 076 kg	183,150 lb
Rear Axle Bare Chassis Weight	38 345 kg	84,537 lb
Rear Axle Payload	128 055 kg	282,313 lb
Rear Axle Gross Vehicle Weight	166 401 kg	366,850 lb

Operating Weights – without Hoist Cylinders

Bare Chassis Weight	80 426 kg	177,309 lb
Payload	169 050 kg	372,691 lb
Gross Vehicle Weight	249 476 kg	550,000 lb
Front Axle Bare Chassis Weight	43 133 kg	95,091 lb
Front Axle Payload	39 943 kg	88,059 lb
Front Axle Gross Vehicle Weight	83 076 kg	183,150 lb
Rear Axle Bare Chassis Weight	37 294 kg	82,218 lb
Rear Axle Payload	129 107 kg	284,632 lb
Rear Axle Gross Vehicle Weight	166 401 kg	366,850 lb

- The payload includes anything added to the bare chassis.
- Care must be taken when designing any attachments so that the axle weights are not exceeded.

Final Drives

Double reduction, planetary with full floating axles.	
Differential Ratio	2.10:1
Planetary Ratio	10.83:1
Total Reduction Ratio	22.75:1

Transmission

Forward 1	12.1 km/h	7.5 mph
Forward 2	16.3 km/h	10.2 mph
Forward 3	22.2 km/h	13.8 mph
Forward 4	29.9 km/h	18.6 mph
Forward 5	40.6 km/h	25.2 mph
Forward 6	54.8 km/h	34 mph
Reverse	11 km/h	6.8 mph

- Maximum travel speeds with standard 33.00-R51 tires.

Braking System

Service Brakes: Four corner, wet multi disc, oil cooled, air over hydraulic actuated		
Brake Surface – Front	61 269 cm^2	9,497 in^2
Brake Surface – Rear	89 681 cm^2	13,900 in^2
Brake Standards	ISO 3450:2011	
Parking Brake: Four-corner, wet multi disc, Spring applied, Hydraulically Released		

Body Hoists

Twin, two-stage hydraulic cylinders with snubbing valve		
Pump Flow – High Idle	750 L/min	198 gal/min
Relief Valve Setting – Raise	17 238 kPa	2,500 psi
Body Raise Time – High Idle	15.2 seconds	
Body Lower Time – Float	16.2 seconds	

785 (04) OFF-HIGHWAY TRUCK BARE CHASSIS SPECIFICATIONS

Configurations and features may vary by region. Please consult your Cat® dealer for availability in your area.

Suspension

Self-contained nitrogen/oil cylinders, pin-to-pin mounting, top and bottom double shear clevis attachments		
Effective Cylinder Stroke - Front	320 mm	12.6 in
Effective Cylinder Stroke - Rear	165 mm	6.5 in
Rear Axle Oscillation	+/- 5.4 °	

Service Refill Capacities

Fuel Tank	1893 L	500 gal
Fuel Tank (optional)	2498 L	660 gal
Cooling System	490 L	129 gal
Crankcase	204 L	54 gal
Differentials and Final Drives	650 L	171 gal
Steering Tank	94 L	25 gal
Steering System (includes tank)	117 L	31 gal
Brake/Hoist Hydraulic Tank	540 L	120 gal
Brake Hoist System (includes tank)	641 L	169 gal
Torque Converter/Transmission System (Includes Sump)	248 L	65.5 gal
Front Wheels, Each	13.5 L	3 gal

Steering

Steering Standards	ISO 5010:2019	
Steer Angle	31.34°	
Turning diameter, (ISO 7457:1997)	29.8 m	97 ft 9 in

Tires and Rims

Standard Tire	33.00-R51 (E3 & E4)

- Quick Change Rims optional.
- Caterpillar recommends the customer evaluate all job conditions and consult the tire manufacturer for proper tire selection.

Cab

Air Conditioning	6.9 kW	23,543 Btu/hr
Heater / Defroster	10.01 kW	34,462 Btu/hr
Operator Sound pressure level) Tested to ISO 6396:2008		82 dB(A)
Rollover Protective Structure (ROPS) for:		
Operator meets		ISO 3471:2008
Trainer meets		ISO 13459:2012
Falling Objects Protective Structure (FOPS) for:		
Operator meets		ISO 3449:2005 Level II
Trainer meets		ISO 13459:2012 Level II
785 WTR (Tractor)	94 000 kg	207,234 lb

- Hearing protection may be needed when operating with an open operator station and cab (when not properly maintained or doors/windows open) for extended periods or in a noisy environment.
- Note: Welding on ROPS or making modifications to the ROPS may void the ROPS certification. Please contact Caterpillar OEM Solutions if the application requires welding on the machine frame.

Cat® Water Delivery System (WDS) - optional

Operator selectable coverage	0.2-0.8 L/m² (4 kph - 40 kph)	0.05-0.2 gal/ft² (3 mph - 25 mph)
Maximum water flow	6814 L/min	1,800 gal/min
Water per spray head (minimum)	132.5 L/min	35 gal/min
Water per spray head (maximum)	2271 L/min	600 gal/min
Spray head opening range (minimum)	1 mm	0.04 in
Spray head opening range (maximum)	19 mm	0.75 in
Maximum size debris flushed through spray head	19 mm	0.75 in
Spray width per head (dependent on flow)	4.5-9.1 m	15-30 ft
Spray system hydraulic tank capacity	27.5 L	7.25 gal
Maximum number of rear spray heads	5	
Minimum number of rear spray heads (3 recommended)	2	
Maximum number of front/side spray heads	2	
Minimum number of front/side spray heads	0	
Maximum water from cannon (idle)*	2271 L/min	600 gal/min
Maximum water from cannon (high idle)*	6246 L/min	1,650 gal/min
Maximum cannon spray distance*	61 m	200 ft
Wet water pump/hydraulic motor coupling		

*Depends on nozzle orifice and pipe size.

- Coverage rates above 0.6 L/m² may not be available at higher speeds depending on head count and configuration.
- The Auto Mode setting controls water coverage and automatically adjusts to the number of spray heads being used — independent of ground speed. This is an exclusive feature designed into the Cat® WDS software to help water more efficiently.
- Alternatively, manual mode allows the operator to set a water flow rate that is constant regardless of ground speed. This mode is not recommended for daily operation and will reduce watering efficiency and may increase fuel usage.
- Spray head opening is automatically controlled by the system to achieve Auto Mode Coverage or manual mode flow rate.
- Spray heads on competitive water distribution systems require tools and maintenance to change flow and spray pattern. Caterpillar is the only company to have variable active spray heads to regulate water spray.
- Water flow is continually adjusted during operation to conserve water and achieve desired coverage and flow rate.
- Water tanks are offered by local 3rd party providers with customization based on water application and regional customer requirements. Please contact your local Cat dealer, regional OEM Solutions Account manager, or email OEM_Solutions@cat.com for more information on water tank options and attachments.

785 (04) OFF-HIGHWAY TRUCK BARE CHASSIS DIMENSIONS

All dimensions are approximate.

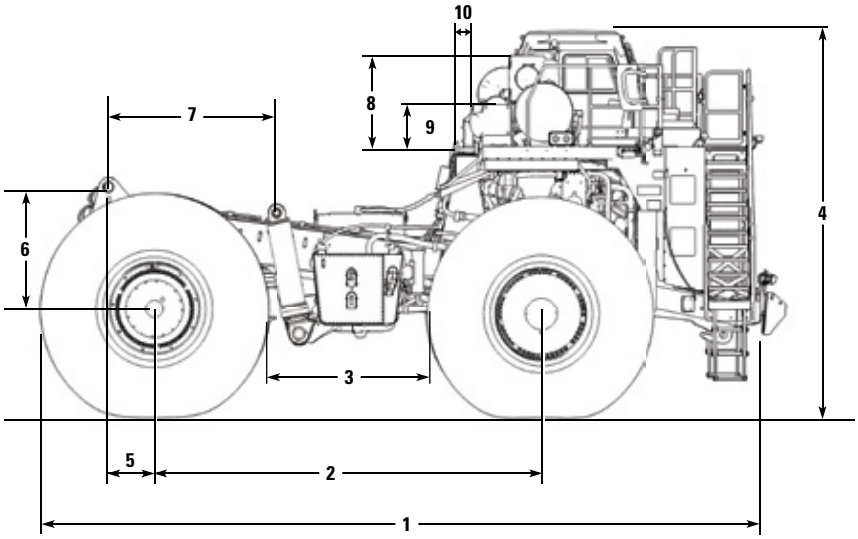

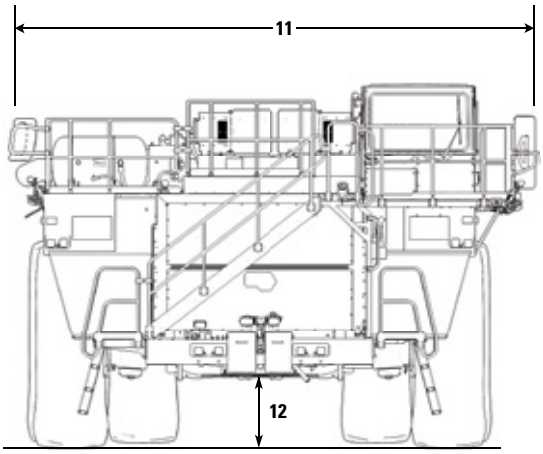

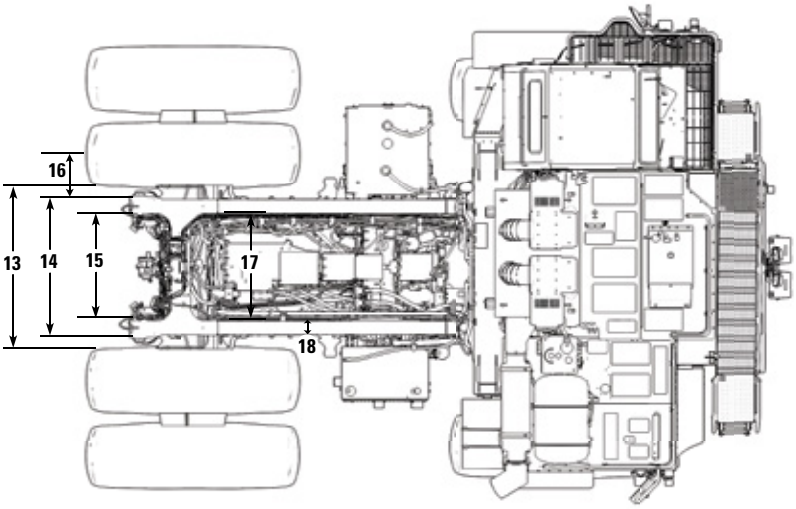

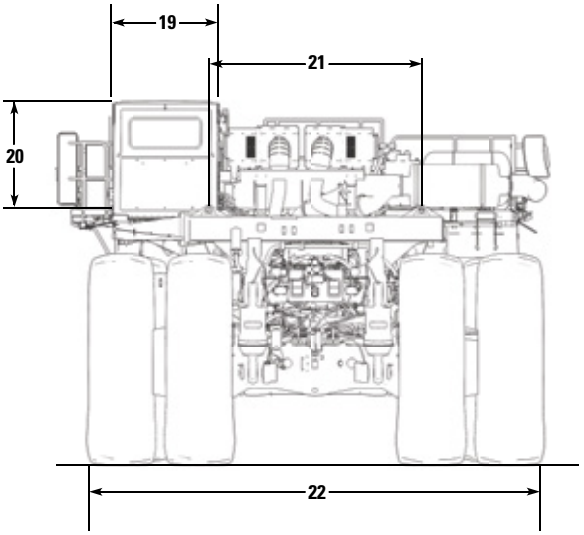

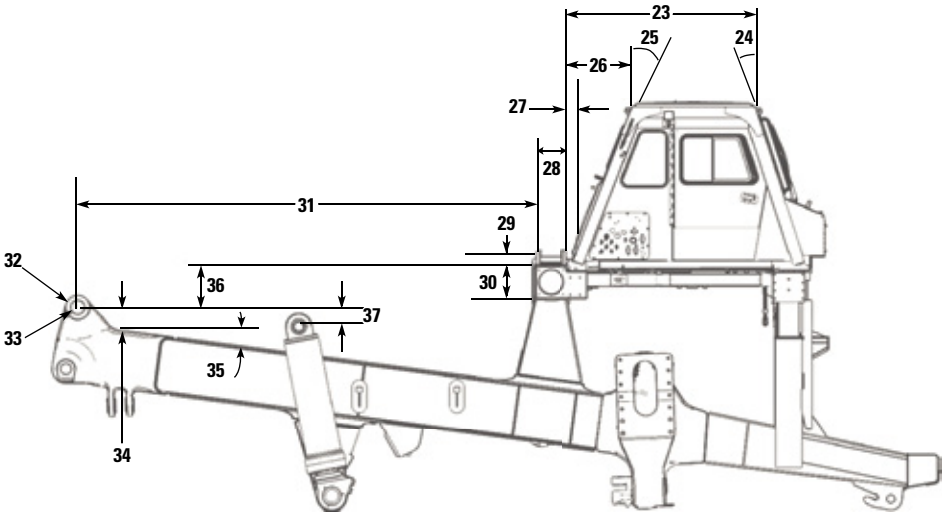

785 (04) OFF-HIGHWAY TRUCK BARE CHASSIS DIMENSIONS

All dimensions are approximate.

Dimensions			
1	Overall Length ** (does not include Wheel Chocks)	9730 mm	31 ft 11 in
2	Wheel Base	5180 mm	17 ft 0 in
3	Distance between Tires **	2165 mm	7 ft 1 in
4	Height to Top of ROPS **	5143 mm	16 ft 11 in
5	Rear Axle to Body Pivot	637 mm	2 ft 1 in
6	Distance between Body Pivot and Rear Axle	1595 mm	5 ft 3 in
7	Distance between Body Pivot and Hoist Cylinders - Horizontal	2251 mm	7 ft 5 in
8	Distance between Main Beam and Top of Air Cleaner	1293 mm	4 ft 3 in
9	Distance between Main Beam and Engine Hood - Vertical	650 mm	2 ft 2 in
10	Distance between Main Beam and Engine Hood - Horizontal	268 mm	0 ft 11 in
11	Overall Width	7703 mm	25 ft 3 in
12	Engine Guard Clearance **	980 mm	3 ft 3 in
13	Distance between Hoist Cylinders	2348 mm	7 ft 8 in
14	Distance between Body Pivots - Outer	1885 mm	6 ft 2 in
15	Distance between Body Pivots - Inner	1518 mm	5 ft 0 in
16	Body Pivot Bearing Width	175 mm	0 ft 7 in
17	Distance between Frame Rails	1510 mm	4 ft 11 in
18	Frame Rail Width	200 mm	0 ft 8 in
19	Cab Width	1660 mm	5 ft 5 in
20	Height of the Cab from Main Beam	1639 mm	5 ft 5 in
21	Distance between Rocker Pads	3000 mm	9 ft 10 in
22	Overall Tire Width	6277 mm	20 ft 7 in
23	Distance between Main Beam and Cab Front	1955 mm	6 ft 5 in
24	Cab Front Angle		18 degrees
25	Cab Rear Angle		21 degrees
26	Distance between Main Beam and Cab Roof	625 mm	2 ft 1 in
27	Distance between Main Beam and Cab Rear	390 mm	1 ft 3 in
28	Main Beam Width	361 mm	1 ft 2 in
29	Rocker Pad Height	80 mm	0 ft 3 in
30	Main Beam Height	354 mm	1 ft 2 in
31	Distance between Body Pivot and Main Beam	4658 mm	15 ft 3 in
32	Body Pivot Outer Radius	240 mm	0 ft 10 in
33	Body Pivot Pin Diameter	130 mm	0 ft 5 in
34	Distance between Body Pivot and Frame	230 mm	0 ft 9 in
35	Frame Slope Angle		7.5 degrees
36	Distance between Main Beam and Body Pivot Pin	439 mm	1 ft 5 in
37	Distance between Body Pivot and Hoist Cylinders - Vertical	194 mm	0 ft 8 in

** These dimensions may vary based on tire size, pressure and load. All dimensions are for reference only and may change for different machine configurations.

Standard and Optional Equipment

Standard and optional equipment may vary. Consult your Cat dealer for details.

POWERTRAIN	Standard	Optional
Aftercooler	●	
Air start		○
Automatic starter protection	●	
Cat Engine, 3512C, 1450 hp, Fuel optimized	●	
Diesel engine/turbocharged/aftercooled	●	
Ground level engine shutdown	●	
Electric start	●	
Elevated low idle control	●	
Engine idle shutdown	●	
Ether starting aid (automatic)	●	
Fan, conventional drive	●	
Fan, variable speed, rockford for use in freezing weather operations		○
Filtration with oil cooler		○
Multi-point oil pressure sensing	●	
Muffler	●	
Muffler, extended exhaust		○
Oil renewal system		○
Pre-lube		○

TRANSMISSION	Standard	Optional
6-speed, automatic powershift with electronic Transmission Chassis Control (TCC)	●	
Body-up reverse neutralizer	●	
Body-up shift inhibitor	●	
Controlled throttle shifting	●	
Directional shift management	●	
Downshift/reverse shift inhibitor	●	
Individual clutch modulation	●	
Lock-up torque converter	●	
Neutral start switch/coast inhibitor	●	
Oil level sensor	●	
Programmable top gear	●	
Rear axle continuous lubrication / filtration	●	

ELECTRICAL	Standard	Optional
Alternator 105 amp	●	
Back up alarm	●	
Batteries, 12V (2), 93 amp-hour	●	
Converter, 12V electrical	●	
Electrical system, 24V, 15 amp	●	
Payload indicator lights	●	
Vehicle Information Management Systems (VIMS)	●	
VIMS, blue light	●	
LED lighting system – Backup and hazard lights – Directional signals, front and rear – Engine compartment lights – External payload lights – Headlights and fog lights – Lo-hi beam selector – Ladder light and service deck lights – Left-hand ladder/service deck – Stop/tail lights	●	

BRAKING SYSTEM	Standard	Optional
Automatic resistive braking control	●	
Brake release motor (towing)	●	
Engine overspeed protection	●	
Extended life brake disc material	●	
Oil-cooled, wet multi-disc (front and rear) (service, resistive braking, parking, secondary)	●	

FLUIDS	Standard	Optional
Antifreeze protection to –50° C (–58° F)	●	

CAB	Standard	Optional
Standard Cab – Deluxe operator seat – Basic companion seat – Payload indicator lamps – Retractable windshield visor	●	
Deluxe cab – includes standard cab features plus: – Premium plus operator seat – Deluxe companion seat – External payload digital display monitors – Cab cleanout vacuum – Operator footrest		○
Air cleaner service indicator	●	
Air conditioner	●	
Auxiliary power connection/cigarette lighter	●	
Diagnostic connection port	●	
Dome courtesy light	●	
Entertainment radio ready – 5-amp converter, speakers, antenna, and wiring	●	
Gauge panel: Air pressure, Brake oil temperature, Engine coolant temperature, Fuel level	●	
Electric hour meter	●	
Electric engine control fault indicator	●	
Heater/defroster (11 070 kCal/43,930 BTU)	●	
Horn	●	
Hoist, body control (electric)	●	
Mirrors, right and left	●	
Prohibit access handrail – rear cab	●	
ROPS cab, insulated/sound suppressed	●	
Seatbelt for operator, park brake safety; two-point seatbelt for trainer/passenger	●	
Speedometer and Tachometer	●	
Stairway and walkway access, 600 mm (24 in)	●	
Steering wheel, tilt, padded, telescopic	●	
Supplemental steering (automatic)	●	
Traction control system	●	
Transmission gear indicator	●	
Window, operator, electric powered	●	
Windshield, wiper, intermittent control, and washer	●	
VIMS message center with universal gauge & keypad	●	
Vital Info Management System (VIMS)	●	

Standard and Optional Equipment

Standard and optional equipment may vary. Consult your Cat dealer for details.

CAT TECHNOLOGY PRODUCTS	Standard	Optional
Product link™ cellular	•	
Product link satellite		○
Cat Water Delivery System software		○
Cat MineStar™ hardware and connectivity packages:		
• Level 1 – Basic (Equipment Tracking)		○
• Level 2 – Premium (Equipment Tracking + Production Recording)		○

OBJECT DETECTION SYSTEM	Standard	Optional
Radar and camera	•	
Radar and camera, alternate		○
Camera only (radar ready)		○
Camera, alternate		○
Omission, camera and radar		○

SAFETY AND SECURITY	Standard	Optional
Ground level VIMS data port	•	
Ground level battery disconnect	•	
Fire extinguisher, portable		○
Working at heights handrail		○
Working at heights package		○
Working at heights service		○

FUEL SYSTEMS	Standard	Optional
1893 L (500 gallon) capacity fuel tank and fast fill system	•	
2498 L (660 gallon) capacity fuel tank and fast fill system		○
Fast fill fuel system	•	
Fuel filter basic screen	•	
Fuel filter with separator		○
Fuel heater		○

ACCESS	Standard	Optional
Fixed ladder	•	
Powered staircase		○

RIMS AND WHEELS	Standard	Optional
33R51 standard rim		○
33R51 quick change rim		○
Brake wear indicator		○
Hub odometer		○
Rim diffuser		○
Rims Mounting Group	•	
Wheel chocks		○

MUD GUARDS	Standard	Optional
Mud guards for standard hydraulic and fuel tank		○
Mud guards for standard hydraulic / large fuel tank		○

CHASSIS	Standard	Optional
Driveline guard	•	
Mirror heated	•	
Mirror wide and heated		○

COLD WEATHER	Standard	Optional
240V engine coolant and oil heater		○

SERVICE	Standard	Optional
Auto lube	•	
Auxiliary steering quick connect (towing)	•	
Auxiliary "buddy" dump quick connect	•	
Dual [LM2] [TS3] dryer for compressed air system	•	
Grease injector	•	
Quick connect fitting for engine oil	•	
Service center		○

CAT WATER DELIVERY SYSTEM (WDS) - OPTIONAL ATTACHMENT	Standard	Optional
Controls:		
• Factory installed / Integrated into cab	•	
Water System Monitor:		
• Integrated into cab	•	
• Programmable spray configurations	•	
• Automatic diagnostic messages	•	
Variable Hydraulic Pump Drive:		
• 1,800 gpm at speeds of 3 - 25 mph (4 - 40 kph)	•	
• Auto shut-off	•	
• Soft startup	•	
Stainless Steel Spray Heads:		
• Resists corrosion	•	
• Maintenance free	•	
• Patented design	•	
Independent Hydraulic Cooling System:		
• Minimizes overheating	•	
Water Cannon:		
• Hydraulically controlled	•	
• Optional nozzles		○
• Integrated joystick with cab controls	•	
WDS Camera System: includes three cameras		○

Parts & service available through global Cat dealer network

For more information on Cat Truck Bare Chassis, contact OEM Solutions:

oem_solutions@cat.com | www.cat.com/oemsolutions

Materials and specifications are subject to change without notice. Featured products in photos may include additional equipment. See your Cat dealer for available options.

© 2026 Caterpillar. All Rights Reserved. CAT, CATERPILLAR, LET'S DO THE WORK, Product Link, their respective logos, "Caterpillar Corporate Yellow", the "Power Edge" and Cat "Modern Hex" trade dress as well as corporate and product identity used herein, are trademarks of Caterpillar and may not be used without permission.

AEXJ0177 (11-2026)
Build number: 04
(Afr-ME, Asia Pacific, CIS, China, Korea, Taiwan, India, Indonesia, LACD, Pacific Island, SE Asia)