

M316

Wheel Excavator

Technical Specifications

Configurations and features may vary by region. Please consult your Cat® dealer for availability in your area.

Table of Contents

Specifications 2

- Engine 2
- Transmission 2
- Service Refill Capacities 2
- Swing Mechanism 2
- Undercarriage 2
- Operating Weights 2
- Major Component Weights 3
- Hydraulic System 3
- Tires 3
- Dozer Blade 4
- Vibration Levels 4
- Air Conditioning System 4
- Standards 4
- Sound Performance 4
- Dimensions 5
- Undercarriage Dimensions 6
- Working Ranges 7
- Lift Capacities:
  - Variable Adjustable Boom (VAB) (5205 mm), 2500 mm Stick, Counterweight: 2600 kg 8
  - Variable Adjustable Boom (17'1"), 8'2" Stick, Counterweight: 5,730 lb 9
  - Variable Adjustable Boom (5205 mm), 2500 mm Stick, Counterweight: 3300 kg 10
  - Variable Adjustable Boom (17'1"), 8'2" Stick, Counterweight: 7,280 lb 11
- Bucket Specifications and Compatibility 12
- Attachments Offering Guide 14

Standard and Optional Equipment 17

Dealer Installed Kits and Attachments 19

Cab Options 20

M316 Environmental Declaration 21

M316 Wheel Excavator Specifications

Engine

Engine Model	Cat® 4.4	
Engine Power		
ISO 14396	110 kW	148 hp
Net Power		
ISO 9249	105 kW	141 hp
Bore	105 mm	4.1 in
Stroke	127 mm	5 in
Displacement	4.4 L	268.5 in³
Biodiesel Capability	Up to B20(1)	
Number of Cylinders	4	

- Meets U.S. EPA Tier 4 Final and EU Stage V emission standards.
- Advertised power is tested per the specified standard in effect at the time of manufacture.
- Net power advertised is the power available at the flywheel when engine is equipped with fan, air cleaner, CEM exhaust gas aftertreatment, alternator, and cooling fan running at intermediate speed.
- Recommended for use up to 3000 m (9,843 ft) altitude with engine power derate above 3000 m (9,843 ft).
- Rated speed 2,000 rpm.

(1)Cat diesel engines are required to use ULSD (ultra-low sulfur diesel fuel with 15 ppm of sulfur or less) and are compatible* with ULSD blended with the following lower-carbon intensity fuels** up to:

- ✓ 20% biodiesel FAME (fatty acid methyl ester)***
- ✓ 100% renewable diesel, HVO (hydrotreated vegetable oil) and GTL (gas-to-liquid) fuels

Refer to guidelines for successful application. Please consult your Cat dealer or "Caterpillar Machine Fluids Recommendations" (SEBU6250) for details.

**While Caterpillar engines are compatible with these alternative fuels, some regions may not allow their use.*

***Tailpipe greenhouse gas emissions from lower-carbon intensity fuels are essentially the same as traditional fuels.*

****Engines with no aftertreatment devices are compatible with higher blends, up to 100% biodiesel (for use of blends higher than 20% biodiesel, consult your Cat dealer).*

Transmission

Forward/Reverse		
1st Gear	10 km/h	6.2 mph
2nd Gear	35 km/h	21.7 mph
Creeper Speed		
1st Gear	5.5 km/h	3.4 mph
2nd Gear	15 km/h	9.3 mph
Drawbar Pull	102 kN	22,931 lbf
Maximum Gradeability at (16 500 kg/36,380 lb)	78.0%	

Service Refill Capacities

Fuel Tank (total capacity)	350 L	92.5 gal
Diesel Exhaust Fluid Tank	20 L	5.3 gal
Cooling System	24 L	6.3 gal
Engine Oil	13 L	3.4 gal
Hydraulic Tank	120 L	31.7 gal
Hydraulic System (including tank)	260 L	68.7 gal
Rear Axle Housing (differential)	14 L	4 gal
Front Steering Axle (differential)	10.5 L	2.8 gal
Final Drive (each)	2.5 L	0.7 gal
Powershift Transmission	2.5 L	0.7 gal

Swing Mechanism

Maximum Swing Speed	10.2 rpm	
Maximum Swing Torque	43.8 kN·m	32,305 lbf·ft

Undercarriage

Ground Clearance	365 mm	14.4 in
Maximum Steering Angle	35°	
Oscillation Axle Angle	± 8.5°	
Minimum Turning Radius		
Outside of Tire	6300 mm	20.7 ft
Outside of Tire (plastic fender)	7550 mm	24.8 ft
End of VA Boom	7300 mm	23.9 ft

Operating Weights*

Typical Configurations		
Blade and Outriggers[1]	16 510 kg	36,400 lb
Front and Rear Outriggers[2]	16 780 kg	36,990 lb

*Operating weight includes full fuel tank, operator and 10.00-20 tires. Weight varies depending on configuration.

[1]Typical configurations include VA boom, 2500 mm (8'2") stick, 2600 kg (5,732 lb) counterweight, 10:00-20 tires, blade and outriggers.

[2]Typical configurations include VA boom, 2500 mm (8'2") stick, 2600 kg (5,732 lb) counterweight, 10:00-20 tires, front and rear outriggers.

Major Component Weights

Boom (including VAB and stick cylinder, pins and standard hydraulic lines)		
Variable Adjustable Boom 5205 mm (17'1")	2200 kg	4,850 lb
Stick (including cylinder, bucket linkage, pins and standard hydraulic lines)		
Stick 2500 mm (8'2")	810 kg	1,790 lb
Counterweights		
Standard	2600 kg	5,730 lb
Optional	3300 kg	7,280 lb
Undercarriage (including axles, standard tires and steps)		
Rear Blade/Front Outrigger	5410 kg	11,930 lb
Rear Outrigger/Front Blade	5410 kg	11,930 lb
Rear Outrigger/Front Outrigger	5680 kg	12,520 lb
Buckets		
Pin-On Bucket General Duty (GD) 1200 mm (47"), 0.80 m^3 (1.05 yd^3)	680 kg	1,500 lb
Pin-On Bucket GD 1200 mm (47"), 0.91 m^3 (1.19 yd^3)	700 kg	1,540 lb
Quick Couplers (QC)		
CW30	220 kg	490 lb
Pin Grabber	300 kg	660 lb

Hydraulic System

Maximum Pressure – Implement Circuit		
Normal	35 000 kPa	5,076 psi
Heavy Lift	37 000 kPa	5,366 psi
Travel Circuit	35 000 kPa	5,076 psi
Maximum Pressure – Auxiliary Circuit		
High Pressure	35 000 kPa	5,076 psi
Medium Pressure	17 000 kPa	2,466 psi
Swing Mechanism	35 000 kPa	5,076 psi
Maximum Flow		
Implements	275 L/min	73 gal/min
Travel Circuit	190 L/min	50 gal/min
Auxiliary Circuit		
High Pressure	250 L/min	66 gal/min
Medium Pressure	55 L/min	14.5 gal/min
Swing Mechanism	106 L/min	28.0 gal/min
Cylinders		
Boom Cylinder (VA) – Bore	115 mm	5"
Boom Cylinder (VA) – Stroke	916 mm	3'0"
VAB Cylinder – Bore	140 mm	6"
VAB Cylinder – Stroke	743 mm	2'5"
Stick Cylinder – Bore	120 mm	5"
Stick Cylinder – Stroke	1147 mm	3'9"
Bucket Cylinder – Bore	100 mm	4"
Bucket Cylinder – Stroke	1055 mm	3'6"

Tires

Standard	10.00-20 (dual pneumatic)
Optional	11.00-20 (dual pneumatic) 445/70/R19.5 TL XF (single pneumatic)

M316 Wheel Excavator Specifications

Dozer Blade

Blade Type	Radial	
Width	2540 mm	8'4"
Blade Roll-Over Height	540 mm	1'9"
Blade Total Height	580 mm	1'11"
Maximum Lowering Depth From Ground	120 mm	5"
Maximum Raising Height Above Ground	475 mm	1'7"

Vibration Levels

Maximum Hand/Arm (ISO 5349-2001)	<2.5 m/s²	<8.2
Maximum Whole Body (ISO/TR 25398:2006)	<0.5 m/s²	<1.6
Seat Transmissibility Factor (ISO 7096:2020-spectral class EM5)	<0.7	

Air Conditioning System

The air conditioning system on this machine contains the fluorinated greenhouse gas refrigerant R134a or R1234yf. See the label or instruction manual for identification of the gas.
– If equipped with R134a (Global Warming Potential = 1430), the system contains 0.9 kg (2.0 lb) of refrigerant which has a CO_2 equivalent of 1.287 metric tonnes (1.418 tons).
– If equipped with R1234yf (Global Warming Potential = 0.5), the system contains 0.75 kg (1.65 lb) of refrigerant which has a CO_2 equivalent of 0.0004 metric tonnes (0.0004 tons).

Standards

Brakes	ISO 3450:2011
Cab/Rollover Protective Structure (ROPS)	ISO 12117-2:2008
Operator Protective Guards (OPG) (optional)	ISO 10262:1998 Level II
Cab/Sound Levels	Meets appropriate standards as listed below

Sound Performance

ISO 6396:2008 internal	70 dB(A)
ISO 6395:2008 external	102 dB(A)

- External Sound – The labelled spectator sound power level represents the Guaranteed Value per 2000/14/EC, when properly equipped, and is measured according to the test procedures and conditions specified in ISO 6395:2008. The measurements were conducted at 70% of the maximum engine cooling fan speed.
- Internal Sound – The operator sound pressure level is measured according to the test procedures and conditions specified in ISO 6396:2008 for a cab offered by Caterpillar, when properly installed and maintained and tested with the door and windows closed. The measurements were conducted at 70% of the maximum engine cooling fan speed.
- Hearing protection may be needed when operating with an open operator station and cab (when not properly maintained for doors/windows open) for extended periods or in noisy environment(s).

Dimensions

All dimensions are approximate. Values are with 10.00-20 dual pneumatic tires.

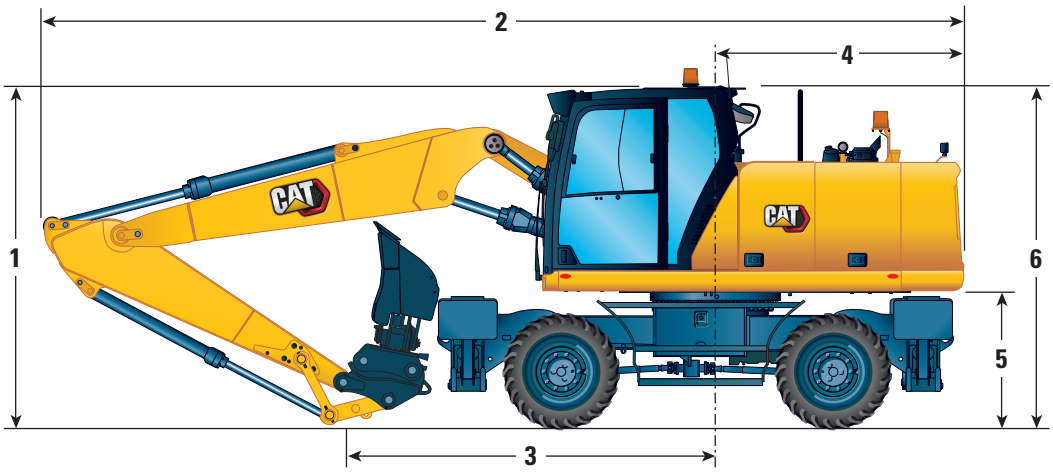

Boom Option	Variable Adjustable Boom 5205 mm (17'1")
Stick Option	**2500 mm (8'2")**
1 Shipping Height with Operator Protective Guards (highest point between boom and cab)	3360 mm (11'0")
Shipping Height without OPG	3210 mm (10'6")
2 Shipping Length	8710 mm (28'7")
3 Support Point	3530 mm (11'7")
4 Tail Swing Radius	2350 mm (7'9")
5 Counterweight Clearance	1301 mm (4'3")
6 Cab Height	
No OPG	3194 mm (10'6")
With OPG	3356 mm (11'0")
Overall Machine Width	
Width with Outriggers on Ground	3800 mm (12'6")
Width with Outriggers Up	2540 mm (8'4")
Width with Blade	2540 mm (8'4")
7 Width with Outriggers Fully Down	3645 mm (12'0")
23 Enclosure Height (doors)	2500 mm (8'2")
8 Upperframe Width	2540 mm (8'4")
Roading Position	
9 Steering Wheel to Linkage in Roading Position	2870 mm (9'5")
10 Height in Roading Position	3950 mm (12'12")

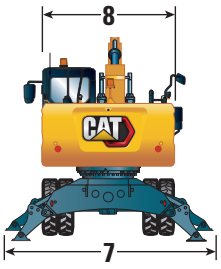

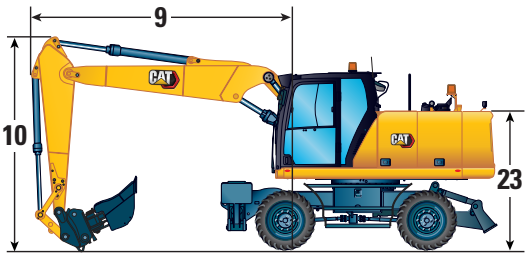

M316 Wheel Excavator Specifications

Undercarriage Dimensions

All dimensions are approximate. Values are with 10.00-20 dual pneumatic tires.

Undercarriage	Rear Blade/ Front Outrigger	Rear Outrigger/ Front Blade	Rear Outrigger/ Front Outrigger
11 Overall Undercarriage Length	4970 mm (16'4")	4970 mm (16'4")	4805 mm (15'9")
12 Wheel Base	2550 mm (8'4")	2550 mm (8'4")	2550 mm (8'4")
13 Swing Bearing Center to Rear Axle Center	1100 mm (3'7")	1100 mm (3'7")	1100 mm (3'7")
14 Swing Bearing Center to Front Axle Center	1450 mm (4'9")	1450 mm (4'9")	1450 mm (4'9")
15 Rear Axle to Rear Outrigger (mid)	—	830 mm (2'9")	830 mm (2'9")
16 Front Axle to Front Outrigger (mid)	925 mm (3'0")	—	925 mm (3'0")
17 Rear Axle to Blade (end)	1270 mm (4'2")	—	—
Front Axle to Blade (end)	—	1315 mm (4'4")	—
18 Maximum Outrigger Depth*	115 mm (5")	115 mm (5")	115 mm (5")
19 Blade Width	2540 mm (8'4")	2540 mm (8'4")	—
Maximum Blade Depth below Ground	120 mm (5")	120 mm (5")	—
Ground Clearance			
Lowest Step Clearance	395 mm (1'4")	395 mm (1'4")	395 mm (1'4")
20 Outrigger Clearance	335 mm (1'1")	335 mm (1'1")	335 mm (1'1")
21 Blade Clearance	475 mm (8'4")	475 mm (8'4")	475 mm (8'4")
22 Axle Clearance	365 mm (1'2")	365 mm (1'2")	365 mm (1'2")

*Maximum tire clearance with outrigger fully down





Undercarriage with dozer only

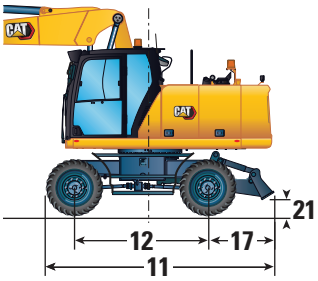

Undercarriage with 2 sets of outriggers

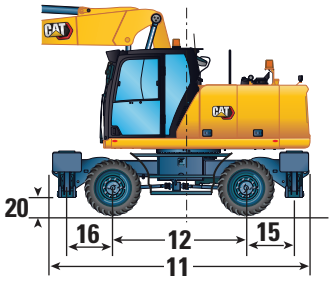

Undercarriage with 1 set of outriggers and dozer

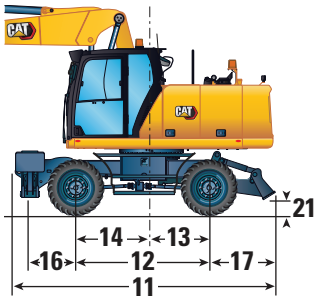

Working Ranges

All dimensions are approximate. Values are with 10.00-20 dual pneumatic tires.

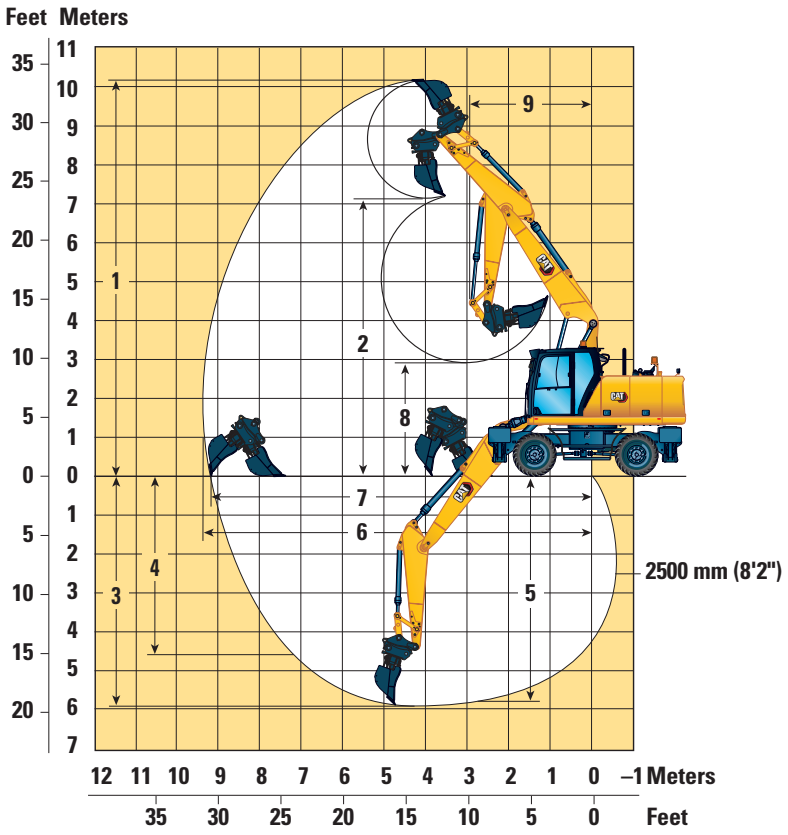

Boom Option	Variable Adjustable Boom 5205 mm (17'1")
Stick Option	**2500 mm (8'2")**
1 Maximum Cutting Height	10 240 mm (33'7")
2 Maximum Loading Height	7280 mm (23'11")
3 Maximum Digging Depth	5920 mm (19'5")
4 Maximum Vertical Wall Digging Depth	4620 mm (15'2")
5 Maximum Depth Cut for 2440 mm (8'0") Level Bottom	5810 mm (19'1")
6 Maximum Reach	9390 mm (30'10")
7 Maximum Reach at Ground Line	9220 mm (30'3")
8 Minimum Loading Height	2940 mm (9'8")
9 Minimum Front Swing Radius	2900 mm (9'6")
Bucket Forces (ISO)	119 kN (26,752 lbf)
Stick Forces (ISO)	75 kN (16,861 lbf)
Bucket Type	GD
Bucket Capacity	0.8 m^3 (1.05 yd^3)
Bucket Tip Radius (Pin-On)	1378 mm (4'6")
Bucket Tip Radius (QC)	1484 mm (4'10")

Range values are with dual pneumatic tires (10.00-20).
Range values are calculated with a GD bucket (CW) and CW-30 quick coupler with a tip radius of 1484 mm (4'10").
Force values are calculated with heavy lift on, a GD bucket (pin-on) and a tip radius of 1378 mm (4'6").

M316 Wheel Excavator Specifications

Lift Capacities – Variable Adjustable Boom (5205 mm), 2500 mm Stick

All values are in kg, work tool: none, bucket cylinder and bucket linkage installed, counterweight: 2600 kg, heavy lift function on.

 Load at maximum reach (sticknose/bucket pin)

 Load over front

 Load over rear

 Load over side

 Load point height

	Undercarriage configuration	3000 mm			4500 mm			6000 mm			7500 mm						mm
																	
7500 mm	Front stabilizer – rear radial dozer – raised				*4,350	*4,350	4,100							*3,050	*3,050	*3,050	5280
	Front stabilizer – rear radial dozer – lowered				*4,350	*4,350	*4,350							*3,050	*3,050	*3,050	
	Front radial dozer – rear stabilizer – lowered				*4,350	*4,350	*4,350							*3,050	*3,050	*3,050	
	Front stabilizer – rear stabilizer – lowered				*4,350	*4,350	*4,350							*3,050	*3,050	*3,050	
6000 mm	Front stabilizer – rear radial dozer – raised				*4,300	*4,300	4,100	3,850	3,150	2,500				*2,600	*2,600	2,050	6610
	Front stabilizer – rear radial dozer – lowered				*4,300	*4,300	*4,300	*4,050	*4,050	3,950				*2,600	*2,600	*2,600	
	Front radial dozer – rear stabilizer – lowered				*4,300	*4,300	*4,300	*4,050	*4,050	*4,050				*2,600	*2,600	*2,600	
	Front stabilizer – rear stabilizer – lowered				*4,300	*4,300	*4,300	*4,050	*4,050	*4,050				*2,600	*2,600	*2,600	
4500 mm	Front stabilizer – rear radial dozer – raised				*5,150	4,850	3,900	3,750	3,050	2,450				*2,450	2,100	1,650	7400
	Front stabilizer – rear radial dozer – lowered				*5,150	*5,150	*5,150	*4,850	*4,850	3,900				*2,450	*2,450	*2,450	
	Front radial dozer – rear stabilizer – lowered				*5,150	*5,150	*5,150	*4,850	*4,850	4,050				*2,450	*2,450	*2,450	
	Front stabilizer – rear stabilizer – lowered				*5,150	*5,150	*5,150	*4,850	*4,850	*4,850				*2,450	*2,450	*2,450	
3000 mm	Front stabilizer – rear radial dozer – raised				5,650	4,450	3,500	3,600	2,900	2,300	2,500	2,500	1,600	2,350	1,900	1,450	7810
	Front stabilizer – rear radial dozer – lowered				*6,900	*6,900	5,800	*5,150	*5,150	3,700	*3,900	*3,900	2,600	*2,450	*2,450	2,450	
	Front radial dozer – rear stabilizer – lowered				*6,900	*6,900	6,100	*5,150	*5,150	3,850	*3,900	*3,900	2,700	*2,450	*2,450	*2,450	
	Front stabilizer – rear stabilizer – lowered				*6,900	*6,900	*6,900	*5,150	*5,150	4,700	*3,900	*3,900	3,300	*2,450	*2,450	*2,450	
1500 mm	Front stabilizer – rear radial dozer – raised				5,250	4,100	3,150	3,400	2,750	2,150	2,,450	1,950	1,500	2,250	1,800	1,400	7900
	Front stabilizer – rear radial dozer – lowered				*7,700	*7,700	5,400	*5,600	*5,600	3,550	*4,350	*4,350	2,550	*2,550	*2,550	2,350	
	Front radial dozer – rear stabilizer – lowered				*7,700	*7,700	5,700	*5,600	*5,600	3,,700	*4,350	3,950	2,650	*2,550	*2,550	2,450	
	Front stabilizer – rear stabilizer – lowered				*7,700	*7,700	7,050	*5,600	*5,600	4500	*4,350	4,100	3,200	*2,550	*2,550	*2,550	
0 mm	Front stabilizer – rear radial dozer – raised				5,050	3,900	3,000	3,300	2,600	2,000	2,400	1,900	1,450	2,300	1,850	1,400	7700
	Front stabilizer – rear radial dozer – lowered				*7,700	*7,700	5,200	*5,600	*5,600	3,400	*4,150	*4,150	2,500	*2,800	*2,800	2,400	
	Front radial dozer – rear stabilizer – lowered				*7,700	*7,700	5,450	*5,600	5,450	3,550	*4,150	3,900	2,600	*2,800	*2,800	2,500	
	Front stabilizer – rear stabilizer – lowered				*7,700	*7,700	6,800	*5,600	*5600	4,350	*4,150	4,050	3,150	*2,800	*2,800	*2,800	
–1500 mm	Front stabilizer – rear radial dozer – raised	*6,300	*6,300	5,400	5,000	3,850	2,950	3,250	2,600	1,950				2,550	2,050	1,550	7170
	Front stabilizer – rear radial dozer – lowered	*6,300	*6,300	*6,300	*6,900	*6,900	5,150	*5,050	*5,050	3,350				*3,250	*3,250	2,650	
	Front radial dozer – rear stabilizer – lowered	*6,300	*6,300	*6,300	*6,900	*6,900	5,400	*5,050	*5,050	3,500				*3,250	*3,250	2,750	
	Front stabilizer – rear stabilizer – lowered	*6,300	*6,300	*6,300	*6,900	*6,900	6,750	*5,050	*5,050	4,300				*3,250	*3,250	*3,250	
–3000 mm	Front stabilizer – rear radial dozer – raised				5,050	3,900	3,000	3,300	2,650	2,050				*3,150	2,550	1,950	6210
	Front stabilizer – rear radial dozer – lowered				*5,250	*5,250	5,250	*3,500	*3,500	3,450				*3,150	*3,150	*3,150	
	Front radial dozer – rear stabilizer – lowered				*5,250	*5,250	*5,250	*3,500	*3,500	*3,500				*3,150	*3,150	*3,150	
	Front stabilizer – rear stabilizer – lowered				*5,250	*5,250	*5,250	*3,500	*3,500	*3,500				*3,150	*3,150	*3,150	

*Indicates that the load is limited by hydraulic lifting capacity rather than tipping load.

Oscillating axle needs to be locked. Weight of all lifting accessories must be subtracted from the lifting capacities. All lift capacities calculated and rated per ISO 10567:2007. Rated loads do not exceed 87% of hydraulic lift capacity or 75% of tipping load. Heavy Lift Function ON. Lifting capacities are based on the machine standing on a firm uniform supporting surface. The load point is the center line of the bucket pivot mounting pin on the stick. Lift capacity is calculated with VA cylinder completely extracted. The use of a work tool attachment point to handle/lift objects, could affect the machine lift performance.

Always refer to the appropriate Operation and Maintenance Manual for specific product information.

Lift Capacities – Variable Adjustable Boom (17'1"), 8'2" Stick

All values are in lb, work tool: none, bucket cylinder and bucket linkage installed, counterweight: 5,730 lb, heavy lift function on.

 Load at maximum reach (sticknose/bucket pin)
 Load over front
 Load over rear
 Load over side
 Load point height

	Undercarriage configuration	10 ft			15 ft			20 ft			25 ft						ft
25 ft	Front stabilizer – rear radial dozer – raised				*9,400	*9,400	8,800							*6,800	*6,800	*6,800	16.86
	Front stabilizer – rear radial dozer – lowered				*9,400	*9,400	*9,400							*6,800	*6,800	*6,800	
	Front radial dozer – rear stabilizer – lowered				*9,400	*9,400	*9,400							*6,800	*6,800	*6,800	
	Front stabilizer – rear stabilizer – lowered				*9,400	*9,400	*9,400							*6,800	*6,800	*6,800	
20 ft	Front stabilizer – rear radial dozer – raised				*9,500	*9,500	8,900	8,200	6,700	5,400				*5,800	*5,800	4,600	21.49
	Front stabilizer – rear radial dozer – lowered				*9,500	*9,500	*9,500	*8,600	*8,600	8,500				*5,800	*5,800	*5,800	
	Front radial dozer – rear stabilizer – lowered				*9,500	*9,500	*9,500	*8,600	*8,600	*8,600				*5,800	*5,800	*5,800	
	Front stabilizer – rear stabilizer – lowered				*9,500	*9,500	*9,500	*8,600	*8,600	*8,600				*5,800	*5,800	*5,800	
15 ft	Front stabilizer – rear radial dozer – raised				*11,200	10,400	8,400	8,100	6600	5,300				*5,400	4,700	3,700	24.18
	Front stabilizer – rear radial dozer – lowered				*11,200	*11,200	*11,200	*10,600	*10,600	8,400				*5,400	*5,400	*5,400	
	Front radial dozer – rear stabilizer – lowered				*11,200	*11,200	*11,200	*10,600	*10,600	8,700				*5,400	*5,400	*5,400	
	Front stabilizer – rear stabilizer – lowered				*11,200	*11,200	*11,200	*10,600	*10,600	10,500				*5,400	*5,400	*5,400	
10 ft	Front stabilizer – rear radial dozer – raised				12,200	9,600	7,600	7,700	6,300	4,900	5,400	4,400	3,400	5,100	4,200	3,200	25.59
	Front stabilizer – rear radial dozer – lowered				*14,900	*14,900	12,500	*11,200	*11,200	8,000	*7,600	*7,600	5,600	*5,400	*5,400	5,400	
	Front radial dozer – rear stabilizer – lowered				*14,900	*14,900	13,100	*11,200	*11,200	8,300	*7,600	*7,600	5,800	*5,400	*5,400	*5,400	
	Front stabilizer – rear stabilizer – lowered				*14,900	*14,900	*14,900	*11,200	*11,200	10,100	*7,600	*7,600	7,000	*5,400	*5,400	*5,400	
5 ft	Front stabilizer – rear radial dozer – raised				11,300	8,800	6,800	7,300	5,900	4,600	5,200	4,200	3,200	4,900	4,000	3,100	25.92
	Front stabilizer – rear radial dozer – lowered				*16,700	*16,700	11,700	*12,100	*12,100	7,600	*9,300	*9,300	5,500	*5,600	*5,600	5,100	
	Front radial dozer – rear stabilizer – lowered				*16,700	*16,700	12,200	*12,100	*12,100	8,000	*9,300	8,500	5,700	*5,600	*5,600	5,400	
	Front stabilizer – rear stabilizer – lowered				*16,700	*16,700	15,100	*12,100	*12,100	9,700	*9,300	8,800	6,900	*5,600	*5,600	*5,600	
0 ft	Front stabilizer – rear radial dozer – raised				10,800	8,400	6,400	7,100	5,600	4,300	5,100	4,100	3,200	5,000	4,100	3,100	25.26
	Front stabilizer – rear radial dozer – lowered				*16,700	*16,700	11,200	*12,100	*12,100	7,400	*7,800	*7,800	5,400	*6,100	*6,100	5,300	
	Front radial dozer – rear stabilizer – lowered				*16,700	*16,700	11,800	*12,100	11,700	7,700	*7,800	*7,800	5,600	*6,100	*6,100	5,500	
	Front stabilizer – rear stabilizer – lowered				*16,700	*16,700	14,600	*12,100	*12,100	9,400	*7,800	*7,800	6,800	*6,100	*6,100	*6,100	
–5 ft	Front stabilizer – rear radial dozer – raised	*14,400	*14,400	11,700	10,700	8,300	6,300	7,000	5,600	4,300				5,600	4,500	3,500	23.49
	Front stabilizer – rear radial dozer – lowered	*14,400	*14,400	*14,400	*15,000	*15,000	11,100	*10,900	*10,900	7,300				*7,200	*7,200	5,900	
	Front radial dozer – rear stabilizer – lowered	*14,400	*14,400	*14,400	*15,000	*15,000	11,600	*10,900	*10,900	7,600				*7,200	*7,200	6,100	
	Front stabilizer – rear stabilizer – lowered	*14,400	*14,400	*14,400	*15,000	*15,000	14,500	*10,900	*10,900	9,300				*7,200	*7,200	*7,200	
–10 ft	Front stabilizer – rear radial dozer – raised				10,900	8,500	6,500	*7,200	5,700	4,400				*7,000	5,700	4,400	20.14
	Front stabilizer – rear radial dozer – lowered				*11,300	*11,300	11,300	*7,200	*7,200	*7,200				*7,000	*7,000	*7,000	
	Front radial dozer – rear stabilizer – lowered				*11,300	*11,300	*11,300	*7,200	*7,200	*7,200				*7,000	*7,000	*7,000	
	Front stabilizer – rear stabilizer – lowered				*11,300	*11,300	*11,300	*7,200	*7,200	*7,200				*7,000	*7,000	*7,000	

*Indicates that the load is limited by hydraulic lifting capacity rather than tipping load.

Oscillating axle needs to be locked. Weight of all lifting accessories must be subtracted from the lifting capacities. All lift capacities calculated and rated per ISO 10567:2007. Rated loads do not exceed 87% of hydraulic lift capacity or 75% of tipping load. Heavy Lift Function ON. Lifting capacities are based on the machine standing on a firm uniform supporting surface. The load point is the center line of the bucket pivot mounting pin on the stick. Lift capacity is calculated with VA cylinder completely extracted. The use of a work tool attachment point to handle/lift objects, could affect the machine lift performance.

Always refer to the appropriate Operation and Maintenance Manual for specific product information.

M316 Wheel Excavator Specifications

Lift Capacities – Variable Adjustable Boom (5205 mm), 2500 mm Stick

All values are in kg, work tool: none, bucket cylinder and bucket linkage installed, counterweight: 3300 kg, heavy lift function on.

 Load at maximum reach (sticknose/bucket pin)
 Load over front
 Load over rear
 Load over side
 Load point height

		3000 mm			4500 mm			6000 mm			7500 mm						
	Undercarriage configuration																**mm**
7500 mm	Front stabilizer – rear radial dozer – raised				*4,350	*4,350	*4,350							*3,050	*3,050	*3,050	5280
	Front stabilizer – rear radial dozer – lowered				*4,350	*4,350	*4,350							*3,050	*3,050	*3,050	
	Front radial dozer – rear stabilizer – lowered				*4,350	*4,350	*4,350							*3,050	*3,050	*3,050	
	Front stabilizer – rear stabilizer – lowered				*4,350	*4,350	*4,350							*3,050	*3,050	*3,050	
6000 mm	Front stabilizer – rear radial dozer – raised				*4,300	*4,300	*4,300	*4,050	3,450	2,800				*2,600	*2,600	2,350	6610
	Front stabilizer – rear radial dozer – lowered				*4,300	*4,300	*4,300	*4,050	*4,050	*4,050				*2,600	*2,600	*2,600	
	Front radial dozer – rear stabilizer – lowered				*4,300	*4,300	*4,300	*4,050	*4,050	*4,050				*2,600	*2,600	*2,600	
	Front stabilizer – rear stabilizer – lowered				*4,300	*4,300	*4,300	*4,050	*4,050	*4,050				*2,600	*2,600	*2,600	
4500 mm	Front stabilizer – rear radial dozer – raised				*5,150	*5,150	4,350	4,150	3,400	2,750				*2,450	2,400	1,900	7400
	Front stabilizer – rear radial dozer – lowered				*5,150	*5,150	*5,150	*4,850	*4,850	4,300				*2,450	*2,450	*2,450	
	Front radial dozer – rear stabilizer – lowered				*5,150	*5,150	*5,150	*4,850	*4,850	4,450				*2,450	*2,450	*2,450	
	Front stabilizer – rear stabilizer – lowered				*5,150	*5,150	*5,150	*4,850	*4,850	*4,850				*2,450	*2,450	*2,450	
3000 mm	Front stabilizer – rear radial dozer – raised				6,250	4,950	3,950	4,000	3,250	2,600	2,800	2,300	1,800	*2,450	2,150	1,700	7810
	Front stabilizer – rear radial dozer – lowered				*6,900	*6,900	6,400	*5,150	*5,150	4,100	*3,900	*3,900	2,900	*2,450	*2,450	*2,450	
	Front radial dozer – rear stabilizer – lowered				*6,900	*6,900	6,700	*5,150	*5,150	4,250	*3,900	*3,900	3,000	*2,450	*2,450	*2,450	
	Front stabilizer – rear stabilizer – lowered				*6,900	*6,900	*6,900	*5,150	*5,150	5,150	*3,900	*3,900	3,600	*2,450	*2,450	*2,450	
1500 mm	Front stabilizer – rear radial dozer – raised				5,850	4,550	3,600	3,800	3,050	2,450	2,750	2,200	1,750	2,500	2,050	1,600	7900
	Front stabilizer – rear radial dozer – lowered				*7,700	*7,700	6,000	*5,600	*5,600	3,950	*4,350	*4,350	2,850	*2,450	*2,550	*2,550	
	Front radial dozer – rear stabilizer – lowered				*7,700	*7,700	6,300	*5,600	*5,600	4,100	*4,350	4,300	2,950	*2,450	*2,550	*2,550	
	Front stabilizer – rear stabilizer – lowered				*7,700	*7,700	*7,700	*5,600	*5,600	4,950	*4,350	*4,350	3,550	*2,450	*25,50	*2,550	
0 mm	Front stabilizer – rear radial dozer – raised				5,600	4,350	3,400	3,700	2,950	2,300	2,700	2,150	1,700	2,600	2,100	1,650	7700
	Front stabilizer – rear radial dozer – lowered				*7,700	*7,700	5,800	*5,600	*5,600	3,800	*4,150	*4,150	2,800	*2,800	*2,800	2,700	
	Front radial dozer – rear stabilizer – lowered				*7,700	*7,700	6,050	*5,600	*5,600	3,950	*4,150	*4,150	2,900	*2,800	*2,800	*2,800	
	Front stabilizer – rear stabilizer – lowered				*7,700	*7,700	7,500	*5,600	*5,600	4,800	*4,150	*4,150	3,500	*2,800	*2,800	*2,800	
–1500 mm	Front stabilizer – rear radial dozer – raised	*6,300	*6,300	6,200	5,550	4,300	3,400	3,650	2,900	2,300				2,850	2,300	1,800	7170
	Front stabilizer – rear radial dozer – lowered	*6,300	*6,300	*6,300	*6,900	*6,900	5,750	*5,050	*5,050	3,750				*3,250	*3,250	2,950	
	Front radial dozer – rear stabilizer – lowered	*6,300	*6,300	*6,300	*6,900	*6,900	6,000	*5,050	*5,050	3,900				*3,250	*3,250	3,100	
	Front stabilizer – rear stabilizer – lowered	*6,300	*6,300	*6,300	*6,900	*6,900	*6,900	*5,050	*5,050	4,750				*3,250	*3,250	*3,250	
–3000 mm	Front stabilizer – rear radial dozer – raised				*5,250	4,400	3,450	*3,500	3,000	2,350				*3,150	2,850	2,250	6210
	Front stabilizer – rear radial dozer – lowered				*5,250	*5,250	*5,250	*3,500	*3,500	*3,500				*3,150	*3,150	*3,150	
	Front radial dozer – rear stabilizer – lowered				*5,250	*5,250	*5,250	*3,500	*3,500	*3,500				*3,150	*3,150	*3,150	
	Front stabilizer – rear stabilizer – lowered				*5,250	*5,250	*5,250	*3,500	*3,500	*3,500				*3,150	*3,150	*3,150	

*Indicates that the load is limited by hydraulic lifting capacity rather than tipping load.

Oscillating axle needs to be locked. Weight of all lifting accessories must be subtracted from the lifting capacities. All lift capacities calculated and rated per ISO 10567:2007. Rated loads do not exceed 87% of hydraulic lift capacity or 75% of tipping load. Heavy Lift Function ON. Lifting capacities are based on the machine standing on a firm uniform supporting surface. The load point is the center line of the bucket pivot mounting pin on the stick. Lift capacity is calculated with VA cylinder completely extracted. The use of a work tool attachment point to handle/lift objects, could affect the machine lift performance.

Always refer to the appropriate Operation and Maintenance Manual for specific product information.

Lift Capacities – Variable Adjustable Boom (17'1"), 8'2" Stick

All values are in lb, work tool: none, bucket cylinder and bucket linkage installed, counterweight: 7,280 lb, heavy lift function on.

 Load at maximum reach (sticknose/bucket pin)
 Load over front
 Load over rear
 Load over side
 Load point height

	Undercarriage configuration	10 ft			15 ft			20 ft			25 ft						ft
25 ft	Front stabilizer – rear radial dozer – raised				*9,400	*9,400	*9,400							*6,800	*6,800	*6,800	16.86
	Front stabilizer – rear radial dozer – lowered				*9,400	*9,400	*9,400							*6,800	*6,800	*6,800	
	Front radial dozer – rear stabilizer – lowered				*9,400	*9,400	*9,400							*6,800	*6,800	*6,800	
	Front stabilizer – rear stabilizer – lowered				*9,400	*9,400	*9,400							*6,800	*6,800	*6,800	
20 ft	Front stabilizer – rear radial dozer – raised				*9,500	*9,500	*9,500	*8,600	7,400	6,100				*5,800	*5,800	5,300	21.49
	Front stabilizer – rear radial dozer – lowered				*9,500	*9,500	*9,500	*8,600	*8,600	*8,600				*5,800	*5,800	*5,800	
	Front radial dozer – rear stabilizer – lowered				*9,500	*9,500	*9,500	*8,600	*8,600	*8,600				*5,800	*5,800	*5,800	
	Front stabilizer – rear stabilizer – lowered				*9,500	*9,500	*9,500	*8,600	*8,600	*8,600				*5,800	*5,800	*5,800	
15 ft	Front stabilizer – rear radial dozer – raised				*11,200	*11,200	9,400	8,900	7,300	5,900				*5,400	5,300	4,200	24.18
	Front stabilizer – rear radial dozer – lowered				*11,200	*11,200	*11,200	*10,600	*10,600	9,200				*5,400	*5,400	*5,400	
	Front radial dozer – rear stabilizer – lowered				*11,200	*11,200	*11,200	*10,600	*10,600	9,600				*5,400	*5,400	*5,400	
	Front stabilizer – rear stabilizer – lowered				*11,200	*11,200	*11,200	*10,600	*10,600	*10,600				*5,400	*5,400	*5,400	
10 ft	Front stabilizer – rear radial dozer – raised				13,500	10,600	8,600	8,600	7,000	5,600	6,000	4,900	3,900	*5,400	4,700	3,700	25.59
	Front stabilizer – rear radial dozer – lowered				*14,900	*14,900	13,800	*11,200	*11,200	8,900	*7,600	*7,600	6,200	*5,400	*5,400	*5,400	
	Front radial dozer – rear stabilizer – lowered				*14,900	*14,900	14,400	*11,200	*11,200	9,200	*7,600	*7,600	6,500	*5,400	*5,400	*5,400	
	Front stabilizer – rear stabilizer – lowered				*14,900	*14,900	*14,900	*11,200	*11,200	11,000	*7,600	*7,600	*7,600	*5,400	*5,400	*5,400	
5 ft	Front stabilizer – rear radial dozer – raised				12,600	9,900	7,800	8,200	6,600	5,300	5,900	4,800	3,800	5,500	4,500	3,500	25.92
	Front stabilizer – rear radial dozer – lowered				*16,700	*16,700	12,900	*12,100	*12,100	8,500	*9,300	*9,300	6,100	*5,600	*5,600	*5,600	
	Front radial dozer – rear stabilizer – lowered				*16,700	*16,700	13,500	*12,100	*12,100	8,800	*9,300	9,300	6,300	*5,600	*5,600	*5,600	
	Front stabilizer – rear stabilizer – lowered				*16,700	*16,700	16,600	*12,100	*12,100	10,600	*9,300	*9,300	7,600	*5,600	*5,600	*5,600	
0 ft	Front stabilizer – rear radial dozer – raised				12,100	9,400	7,400	7,900	6,400	5,000	5,800	4,700	3,700	5,700	4,600	3,600	25.26
	Front stabilizer – rear radial dozer – lowered				*16,700	*16,700	12,400	*12,100	*12,100	8,200	*7,800	*7,800	6,000	*6,100	*6,100	5,900	
	Front radial dozer – rear stabilizer – lowered				*16,700	*16,700	13,000	*12,100	*12,100	8,500	*7,800	*7,800	6,200	*6,100	*6,100	*6,100	
	Front stabilizer – rear stabilizer – lowered				*16,700	*16,700	16,100	*12,100	*12,100	10,400	*7,800	*7,800	7,500	*6,100	*6,100	*6,100	
–5 ft	Front stabilizer – rear radial dozer – raised	*14,400	*14,400	13,300	12,000	9,300	7,300	7,800	6,300	4,900				6,300	5,100	4,000	23.49
	Front stabilizer – rear radial dozer – lowered	*14,400	*14,400	*14,400	*15,000	*15,000	12,300	*10,900	*10,900	8,100				*7,200	*7,200	6,500	
	Front radial dozer – rear stabilizer – lowered	*14,400	*14,400	*14,400	*15,000	*15,000	12,900	*10,900	*10,900	8,500				*7,200	*7,200	6,800	
	Front stabilizer – rear stabilizer – lowered	*14,400	*14,400	*14,400	*15,000	*15,000	*15,000	*10,900	*10,900	10,300				*7,200	*7,200	*7,200	
–10 ft	Front stabilizer – rear radial dozer – raised				*11,300	9,500	7,400	*7,200	6,500	5,100				*7,000	6,400	5,100	20.14
	Front stabilizer – rear radial dozer – lowered				*11,300	*11,300	*11,300	*7,200	*7,200	*7,200				*7,000	*7,000	*7,000	
	Front radial dozer – rear stabilizer – lowered				*11,300	*11,300	*11,300	*7,200	*7,200	*7,200				*7,000	*7,000	*7,000	
	Front stabilizer – rear stabilizer – lowered				*11,300	*11,300	*11,300	*7,200	*7,200	*7,200				*7,000	*7,000	*7,000	

*Indicates that the load is limited by hydraulic lifting capacity rather than tipping load.

Oscillating axle needs to be locked. Weight of all lifting accessories must be subtracted from the lifting capacities. All lift capacities calculated and rated per ISO 10567:2007. Rated loads do not exceed 87% of hydraulic lift capacity or 75% of tipping load. Heavy Lift Function ON. Lifting capacities are based on the machine standing on a firm uniform supporting surface. The load point is the center line of the bucket pivot mounting pin on the stick. Lift capacity is calculated with VA cylinder completely extracted. The use of a work tool attachment point to handle/lift objects, could affect the machine lift performance.

Always refer to the appropriate Operation and Maintenance Manual for specific product information.

M316 Wheel Excavator Specifications

Bucket Specifications and Compatibility

Contact your Cat dealer for special bucket requirements.

		Width		Capacity		Weight		Fill	2600 kg (5,730 lb) Counterweight				3300 kg (7,280 lb) Counterweight			
									Variable Angle Boom				Variable Angle Boom			
									2500 mm (8'2") Stick				2500 mm (8'2") Stick			
	Linkage	mm	in	m^3	yd^3	kg	lb	%	Free on wheels	Only dozer (blade) lowered	Dozer (blade) and two stabilizers (outrigger) lowered	Four stabilizers (outrigger) lowered	Free on wheels	Only dozer (blade) lowered	Dozer (blade) and two stabilizers (outrigger) lowered	Four stabilizers (outrigger) lowered
Pin-On (No Quick Coupler)																
General Duty	316	600	24	0.35	0.46	454	1,001	100	●	●	●	●	●	●	●	●
	316	750	30	0.49	0.64	516	1,137	100	○	◉	●	●	◉	●	●	●
	316	900	36	0.62	0.81	580	1,278	100	◇	○	●	●	○	◉	●	●
	316	1050	42	0.76	1.00	629	1,386	100	X	◇	●	●	◇	○	●	●
	316	1200	48	0.91	1.19	697	1,538	100	X	X	◉	●	X	◇	●	●
General Duty – Wide Tip	316	600	24	0.42	0.55	473	1,042	100	◉	●	●	●	●	●	●	●
	316	750	30	0.58	0.76	535	1,179	100	○	⊖	●	●	⊖	●	●	●
	316	1050	42	0.90	1.18	670	1,478	100	X	X	●	●	◇	◇	●	●
Severe Duty	316	600	24	0.35	0.46	505	1,113	90	●	●	●	●	●	●	●	●
	316	750	30	0.49	0.64	578	1,274	90	○	◉	●	●	◉	●	●	●
	316	900	36	0.62	0.81	653	1,440	90	◇	○	●	●	⊖	◉	●	●
	316	1050	42	0.76	1.00	708	1,561	90	X	◇	●	●	◇	⊖	●	●
	316	1200	48	0.91	1.19	785	1,731	90	X	X	●	●	X	◇	●	●
Ditch Cleaning	316	1500	60	0.93	1.22	579	1,277	100	X	◇	●	●	◇	○	●	●
Ditch Cleaning Tilt	316	2000	79	0.86	1.12	1043	2,299	100	X	X	⊖	●	X	X	●	●
Maximum load with pin-on (payload + bucket)								kg	1205	1431	2510	3107	1456	1694	2825	3452
								lb	2,656	3,155	5,533	6,849	3,209	3,735	6,228	7,609

Maximum Material Density:

- ● 2100 kg/m^3 (3,500 lb/yd^3)
- ◉ 1800 kg/m^3 (3,000 lb/yd^3)
- ⊖ 1500 kg/m^3 (2,500 lb/yd^3)
- ○ 1200 kg/m^3 (2,000 lb/yd^3)
- ◇ 900 kg/m^3 (1,500 lb/yd^3)
- X Not Recommended

The above loads are in compliance with hydraulic excavator standard EN474-5:2022/AC:2022, they do not exceed 87% of hydraulic lifting capacity or 75% of tipping capacity with front linkage fully extended at ground line with bucket curled. Capacity based on ISO 7451:2007.

Caterpillar recommends using appropriate work tools to maximize the value customers receive from our products. Use of work tools, including buckets, which are outside of Caterpillar's recommendations or specifications for weight, dimensions, flows, pressures, etc. may result in less-than-optimal performance, including but not limited to reductions in production, stability, reliability, and component durability. Improper use of a work tool resulting in sweeping, prying, twisting and/or catching of heavy loads will reduce the life of the boom and stick.

(continued on next page)

Bucket Specifications and Compatibility *(continued)*

Contact your Cat dealer for special bucket requirements.

		Width		Capacity		Weight		Fill	2600 kg (5,730 lb) Counterweight Variable Angle Boom 2500 mm (8'2") Stick				3300 kg (7,280 lb) Counterweight Variable Angle Boom 2500 mm (8'2") Stick			
	Linkage	mm	in	m³	yd³	kg	lb	%	Free on wheels	Only dozer (blade) lowered	Dozer (blade) and two stabilizers (outrigger) lowered	Four stabilizers (outrigger) lowered	Free on wheels	Only dozer (blade) lowered	Dozer (blade) and two stabilizers (outrigger) lowered	Four stabilizers (outrigger) lowered
With Pin Grabber Coupler																
General Duty	316	600	24	0.35	0.46	454	1,001	100	○	◉	●	●	◉	●	●	●
	316	750	30	0.49	0.64	516	1,137	100	X	○	●	●	○	◉	●	●
	316	900	36	0.62	0.81	580	1,278	100	X	X	●	●	◇	○	●	●
	316	1050	42	0.76	1.00	629	1,386	100	X	X	●	●	X	◇	●	●
	316	1200	48	0.91	1.19	697	1,538	100	X	X	⊖	●	X	X	◉	●
General Duty – Wide Tip	316	600	24	0.42	0.55	473	1,042	100	◇	⊖	●	●	⊖	●	●	●
	316	750	30	0.58	0.76	535	1,179	100	X	◇	●	●	◇	⊖	●	●
	316	1050	42	0.90	1.18	670	1,478	100	X	X	⊖	●	X	X	●	●
Severe Duty	316	600	24	0.35	0.46	505	1,113	90	○	◉	●	●	◉	●	●	●
	316	750	30	0.49	0.64	578	1,274	90	X	○	●	●	○	◉	●	●
	316	900	36	0.62	0.81	653	1,440	90	X	X	●	●	X	○	●	●
	316	1050	42	0.76	1.00	708	1,561	90	X	X	●	●	X	◇	●	●
	316	1200	48	0.91	1.19	785	1,731	90	X	X	⊖	●	X	X	●	●
General Duty – Pin Grabber Performance	316	600	24	0.33	0.43	436	961	100	○	●	●	●	●	●	●	●
	316	900	36	0.57	0.75	578	1,273	100	X	◇	●	●	◇	○	●	●
Severe Duty – Pin Grabber Performance	316	1050	42	0.70	0.92	712	1,570	90	X	X	●	●	X	◇	●	●
Clean Up											◇	⊖	X	X	○	◉
Ditch Cleaning	316	1500	60	0.64	0.84	830	1,829	100	X	X	●	●	X	X	●	●
	316	1800	72	0.78	1.02	928	2,046	100	X	X	⊖	●	X	X	●	●
Ditch Cleaning Tilt	316	2000	79	0.86	1.12	1043	2,299	100	X	X	○	●	X	X	⊖	●
Maximum load with coupler (payload + bucket)								kg	874	1100	2179	2776	1125	1363	2494	3121
								lb	1,927	2,425	4,803	6,120	2,480	3,006	5,499	6,880

Maximum Material Density:

- ● 2100 kg/m³ (3,500 lb/yd³)
- ◉ 1800 kg/m³ (3,000 lb/yd³)
- ⊖ 1500 kg/m³ (2,500 lb/yd³)
- ○ 1200 kg/m³ (2,000 lb/yd³)
- ◇ 900 kg/m³ (1,500 lb/yd³)
- X Not Recommended

The above loads are in compliance with hydraulic excavator standard EN474-5:2022/AC:2022, they do not exceed 87% of hydraulic lifting capacity or 75% of tipping capacity with front linkage fully extended at ground line with bucket curled.

Capacity based on ISO 7451:2007.

Caterpillar recommends using appropriate work tools to maximize the value customers receive from our products. Use of work tools, including buckets, which are outside of Caterpillar's recommendations or specifications for weight, dimensions, flows, pressures, etc. may result in less-than-optimal performance, including but not limited to reductions in production, stability, reliability, and component durability. Improper use of a work tool resulting in sweeping, prying, twisting and/or catching of heavy loads will reduce the life of the boom and stick.

M316 Wheel Excavator Specifications

Attachments Offering Guide

Not all Attachments are available in all regions. Consult your Cat dealer for configurations available in your region.

✓ Match | * Working range front only | No Match | ● 1800 kg/m³ (3,000 lb/yd³) | ○ 1200 kg/m³ (2,000 lb/yd³)

PIN-ON ATTACHMENTS

Undercarriage		Rear Outrigger/ Front Blade		Rear Blade/ Front Outrigger		Rear Outrigger/ Front Outrigger		Rear Blade	
Counterweight		**2600 kg (5,730 lb)**	**3300 kg (7,280 lb)**	**2600 kg (5,730 lb)**	**3300 kg (7,280 lb)**	**2600 kg (5,730 lb)**	**3300 kg (7,280 lb)**	**2600 kg (5,730 lb)**	**3300 kg (7,280 lb)**
Boom Type		**Variable Adjustable Boom**		**Variable Adjustable Boom**		**Variable Adjustable Boom**		**Variable Adjustable Boom**	
Stick Length		**2500 mm (8'2")**		**2500 mm (8'2")**		**2500 mm (8'2")**		**2500 mm (8'2")**	
Hydraulic Hammers	H110 S	✓	✓	✓	✓	✓	✓	✓	✓
	H115 GC S	✓	✓	✓	✓	✓	✓	✓*	✓
	H115 S	✓	✓	✓	✓	✓	✓	✓	✓
	H120 S	✓	✓	✓	✓	✓	✓		✓*
Demolition and Sorting Grapples	G314	✓	✓	✓	✓	✓	✓		✓*
Mobile Scrap and Demolition Shears	S3015 Flat Top	✓	✓	✓	✓	✓	✓		✓*
Pulverizers	P214 Secondary Pulverizer	✓	✓	✓	✓	✓	✓		
Compactors (Vibratory Plate)	CVP75	✓	✓	✓	✓	✓	✓	✓	✓
Rotary Cutters	RC15	✓	✓	✓	✓	✓	✓	✓*	✓
Mulchers	HM2615	✓	✓	✓	✓	✓	✓	✓	✓
	HM3013	✓	✓	✓	✓	✓	✓	✓	✓
Orange Peel Grapples	GSH420-500	●	●	●	●	●	●		
	GSH420-600	●	●	●	●	●	●		
	GSH520-500	●	●	●	●	●	●		
	GSH520-600	○	○	○	○	○	○		

CAT PIN GRABBER COUPLER ATTACHMENTS

Undercarriage		Rear Outrigger/ Front Blade		Rear Blade/ Front Outrigger		Rear Outrigger/ Front Outrigger		Rear Blade	
Counterweight		**2600 kg (5,730 lb)**	**3300 kg (7,280 lb)**	**2600 kg (5,730 lb)**	**3300 kg (7,280 lb)**	**2600 kg (5,730 lb)**	**3300 kg (7,280 lb)**	**2600 kg (5,730 lb)**	**3300 kg (7,280 lb)**
Boom Type		**Variable Adjustable Boom**		**Variable Adjustable Boom**		**Variable Adjustable Boom**		**Variable Adjustable Boom**	
Stick Length		**2500 mm (8'2")**		**2500 mm (8'2")**		**2500 mm (8'2")**		**2500 mm (8'2")**	
Hydraulic Hammers	H110 S	✓	✓	✓	✓	✓	✓	✓*	✓
	H115 GC S	✓	✓	✓	✓	✓	✓		✓*
	H115 S	✓	✓	✓	✓	✓	✓		✓
Demolition and Sorting Grapples	G314	✓	✓	✓	✓	✓	✓		
Compactors (Vibratory Plate)	CVP75	✓	✓	✓	✓	✓	✓		✓
Mulchers	HM2615	✓	✓	✓	✓	✓	✓		
	HM3013	✓	✓	✓	✓	✓	✓	✓	✓
Rotary Cutters	RC15	✓	✓	✓	✓	✓	✓		✓*

(continued on next page)

Attachments Offering Guide *(continued)*

Not all attachments are available in all regions. Consult your Cat dealer for configurations available in your region.

✓ Match | * Working range front only | No Match

S60 DEDICATED COUPLER ATTACHMENTS

Undercarriage		Rear Outrigger/ Front Blade		Rear Blade/ Front Outrigger		Rear Outrigger/ Front Outrigger		Rear Blade	
Counterweight		**2600 kg (5,730 lb)**	**3300 kg (7,280 lb)**	**2600 kg (5,730 lb)**	**3300 kg (7,280 lb)**	**2600 kg (5,730 lb)**	**3300 kg (7,280 lb)**	**2600 kg (5,730 lb)**	**3300 kg (7,280 lb)**
Boom Type		**Variable Adjustable Boom**		**Variable Adjustable Boom**		**Variable Adjustable Boom**		**Variable Adjustable Boom**	
Stick Length		**2.50 m (8'2")**		**2.50 m (8'2")**		**2.50 m (8'2")**		**2.50 m (8'2")**	
Hydraulic Hammers	H110 S	✓	✓	✓	✓	✓	✓	✓	✓
	H115 GC S	✓	✓	✓	✓	✓	✓		✓
	H115 S	✓	✓	✓	✓	✓	✓	✓	✓
	H120 S	✓	✓	✓	✓	✓	✓		
Demolition and Sorting Grapples	G314	✓	✓	✓	✓	✓	✓		
Mobile Scrap and Demolition Shears	S3015 Flat Top	✓	✓	✓	✓	✓	✓		
Compactors (Vibratory Plate)	CVP75	✓	✓	✓	✓	✓	✓	✓	✓
Rotary Cutters	RC15	✓	✓	✓	✓	✓	✓	✓*	✓

HCS60 DEDICATED COUPLER ATTACHMENTS

Undercarriage		Rear Outrigger/ Front Blade		Rear Blade/ Front Outrigger		Rear Outrigger/ Front Outrigger		Rear Blade	
Counterweight		**2600 kg (5,730 lb)**	**3300 kg (7,280 lb)**	**2600 kg (5,730 lb)**	**3300 kg (7,280 lb)**	**2600 kg (5,730 lb)**	**3300 kg (7,280 lb)**	**2600 kg (5,730 lb)**	**3300 kg (7,280 lb)**
Boom Type		**Variable Adjustable Boom**		**Variable Adjustable Boom**		**Variable Adjustable Boom**		**Variable Adjustable Boom**	
Stick Length		**2.50 m (8'2")**		**2.50 m (8'2")**		**2.50 m (8'2")**		**2.50 m (8'2")**	
Hydraulic Hammers	H110 S	✓	✓	✓	✓	✓	✓	✓	✓
	H115 S	✓	✓	✓	✓	✓	✓	✓*	✓
	H120 S	✓	✓	✓	✓	✓	✓		
Demolition and Sorting Grapples	G314	✓	✓	✓	✓	✓	✓		
Mobile Scrap and Demolition Shears	S3015 Flat Top	✓	✓	✓	✓	✓	✓		
Compactors (Vibratory Plate)	CVP75	✓	✓	✓	✓	✓	✓	✓	✓

(continued on next page)

Attachments Offering Guide *(continued)*

Not all attachments are available in all regions. Consult your Cat dealer for configurations available in your region.

✓ Match | * Working range front only | No Match

HCS65 DEDICATED COUPLER ATTACHMENTS

Undercarriage		Rear Outrigger/ Front Blade		Rear Blade/ Front Outrigger		Rear Outrigger/ Front Outrigger		Rear Blade	
Counterweight		2600 kg (5,730 lb)	3300 kg (7,280 lb)	2600 kg (5,730 lb)	3300 kg (7,280 lb)	2600 kg (5,730 lb)	3300 kg (7,280 lb)	2600 kg (5,730 lb)	3300 kg (7,280 lb)
Boom Type		Variable Adjustable Boom		Variable Adjustable Boom		Variable Adjustable Boom		Variable Adjustable Boom	
Stick Length		2.50 m (8'2")		2.50 m (8'2")		2.50 m (8'2")		2.50 m (8'2")	
Hydraulic Hammers	H110 S	✓	✓	✓	✓	✓	✓	✓	✓
	H115 S	✓	✓	✓	✓	✓	✓		✓
	H120 S	✓	✓	✓	✓	✓	✓		
Demolition and Sorting Grapples	G314	✓	✓	✓	✓	✓	✓		
Compactors (Vibratory Plate)	CVP75	✓	✓	✓	✓	✓	✓	✓	✓
Rotary Cutters	RC15	✓	✓	✓	✓	✓	✓		✓*

Standard and Optional Equipment

Standard and optional equipment may vary. Consult your Cat® dealer for details.

	Standard	Optional
BOOM, STICKS, AND LINKAGES		
5.2 m (17'1") Variable Adjustable boom	✓	
2.5 m (8'2") stick	✓	
Bucket linkage, 316-family with lifting eye	✓	
CAT® TECHNOLOGY		
Cat Equipment Management:		
– VisionLink™	✓[1]	
– Remote Flash	✓	
– Remote Troubleshoot	✓	
Cat Grade:		
– Cat Grade with 2D		✓
– Cat Grade with 2D with Attachment Ready Option (ARO)		✓
– Laser catcher		✓
– Compatible with 3D grade systems from Trimble, Topcon, and Leica		✓
– Cat Grade 3D Ready		✓
– Cat Grade Connectivity		✓[2]
Cat Assist:		
– Grade Assist		✓
Cat Payload:		
– On-the-go weighing		✓
– Payload/cycle information		✓
– VisionLink back office reporting		✓[2]
Other:		
Cat Tiltrotator (TRS) integration		✓

	Standard	Optional
ELECTRICAL SYSTEM		
LED lights on boom and cab	✓	
LED lights on chassis (left-hand, right-hand) and counterweight		✓
Programmable time-delay LED working lights	✓	
Roading and indicator lights, front and rear	✓	
Maintenance-free batteries	✓	
Centralized electrical disconnect switch	✓	
Electrical refueling pump		✓
ENGINE		
Cat C4.4 Single Turbo diesel engine	✓	
Power mode selector	✓	
One-touch low idle with automatic engine speed control	✓	
Automatic engine idle shutdown	✓	
Work up to 3000 m (9,842 ft) above sea level without engine power de-rating	✓	
Up to 52°C (125°F) high-ambient cooling capacity	✓	
Down to –18°C (0°F) cold starting capability	✓	
Double element air filter with integrated precleaner	✓	
Electric fuel priming pump	✓	

[1]Provides core telematics data to manage health, maintenance insights, and condition monitoring. Other plans available for more comprehensive data reporting. Consult your Cat dealer for details.

[2]VisionLink subscription required. Consult your Cat dealer for details.

(continued on next page)

M316 Standard and Optional Equipment

Standard and Optional Equipment *(continued)*

Standard and optional equipment may vary. Consult your Cat dealer for details.

	Standard	Optional
HYDRAULIC SYSTEM		
Boom, stick, and bucket drift reduction valves	✓	
Boom and stick lowering check valves		✓
Bucket cylinder check valves		✓
Overload warning	✓	
Electronic main control valve	✓	
Automatic hydraulic oil warm-up	✓	
Element type main hydraulic filter	✓	
One-slider joysticks	✓	
Two-slider joysticks		✓
Advanced Tool Control (one/two way high-pressure flow with drift reduction)	✓	
Second high pressure auxiliary circuit (one/two way high-pressure flow)		✓
Medium pressure auxiliary circuit (one/two way medium-pressure flow)		✓
Heavy lift mode	✓	
Quick coupler circuit for Cat pin grabber	✓	
SmartBoom™		✓
Ride control		✓
Joystick steering		✓
Separate dedicated swing pump	✓	
Automatic swing brake	✓	
Cat BIO HYDO™ Advanced biodegradable hydraulic oil		✓
Adjustable hydraulic aggressiveness	✓	
Pattern changer	✓	
SAFETY AND SECURITY		
Rear and right-side-view cameras	✓	
360° visibility		✓
Wide angle mirrors	✓	
Heated and remotely adjustable mirrors		✓
Travel alarm		✓
Signal/warning horn	✓	
Rotating beacon on cab and chassis		✓
Neutral lever (lock out) for all controls	✓	
Ground-level accessible secondary engine shutoff switch in cab	✓	
Lockable disconnect switch	✓	
Bluetooth® receiver	✓	
Anti-skid plate and countersunk bolts on service platform	✓	
2D E-Fence		✓
Inspection lighting		✓
Cab Avoidance		✓

	Standard	Optional
SERVICE AND MAINTENANCE		
Scheduled Oil Sampling (S·O·S℠) ports	✓	
Automatic lubrication system for implement and swing system		✓
Integrated vehicle health management system	✓	
UNDERCARRIAGE AND STRUCTURES		
All-wheel drive	✓	
Automatic brake/axle lock	✓	
Creeper speed	✓	
Electronic swing and travel lock	✓	
Heavy-duty axles, advanced disc brake system, and travel motor, adjustable braking force	✓	
Oscillating front axle, lockable, with remote greasing point	✓	
10.00-20 16 PR, dual tires		✓
445/70R 19.5, single tires		✓
Steps with tool box in undercarriage (left and right)	✓	
Two-piece drive shaft	✓	
Two-speed hydrostatic transmission	✓	
Undercarriage steps		✓
Rear blade (radial)/front outrigger undercarriage		✓
Rear outrigger/front blade (radial) undercarriage		✓
Rear outrigger/front outrigger undercarriage		✓
Fenders, front and rear, synthetic		✓
2600 kg (5,732 lb) counterweight	✓	
3300 kg (7,275 lb) counterweight		✓

Dealer Installed Kits and Attachments

Attachments may vary. Consult your Cat dealer for details.

CAB

- 75 mm (3") retractable seat belt

SAFETY AND SECURITY

- Bluetooth key fob

GUARDS

- Operator Protective Guards (not compatible with cab light cover, rain protector)
- Mesh guard full front (not compatible with cab light cover, rain protector)

M316 Cab Options

Cab Options

	Deluxe	Premium
Sound-suppressed ROPS cab	●	●
Heated seat with air-adjustable suspension	●	X
Heated and cooled seat with automatic adjustable suspension	X	●
Height-adjustable console, infinite with no tool	●	●
High-resolution 254 mm (10") LCD touchscreen monitor	●	●
Mechanical mirror	●	X
Electrical and adjustable heated mirror	X	●
Automatic bi-level air conditioner	●	●
Jog dial and shortcut keys for monitor control	●	●
Keyless push-to-start engine control	●	●
51 mm (2") orange seat belt	●	●
Unfastened seat belt warning	●	●
Auxiliary relay	○	○
Bluetooth integrated radio (including USB, auxiliary port and microphone)	●	●
2 × 12V DC outlets	●	●
Document storage	●	●
Cup and bottle holders	●	●
Openable two-piece front window (laminated)	●	●
Parallel wiper with washer	●	●
Fixed glass skylight	●	●
LED dome lights	●	●
Foot illumination	●	●
Roller rear sunscreen	X	●
Rear window emergency exit	●	●
Washable floor mat	●	●
Beacon ready	●	●
OPG “ready”	●	●
Vandal guards “ready”	●	●
Two LED cab lights	●	●
Rain visor	●	●

● Standard

○ Optional

X Not available

M316 Environmental Declaration

The following information applies to the machine at the time of final manufacture as configured for sale in the regions covered in this document. The content of this declaration is valid as of the date issued; however, content related to machine features and specifications are subject to change without notice. For additional information, please see the machine's Operation and Maintenance Manual.

For more information on sustainability in action and our progress, please visit https://www.caterpillar.com/en/company/sustainability.

Engine

- The Cat® C4.4 engine meets U.S. EPA Tier 4 Final and EU Stage V emission standards.
- Cat diesel engines are required to use ULSD (ultra-low sulfur diesel fuel with 15 ppm of sulfur or less) and are compatible* with ULSD blended with the following lower-carbon intensity fuels** up to:
  - ✓ 20% biodiesel FAME (fatty acid methyl ester)***
  - ✓ 100% renewable diesel, HVO (hydrotreated vegetable oil) and GTL (gas-to-liquid) fuels

  Refer to guidelines for successful application. Please consult your Cat dealer or "Caterpillar Machine Fluids Recommendations" (SEBU6250) for details.

**While Caterpillar engines are compatible with these alternative fuels, some regions may not allow their use.*

***Tailpipe greenhouse gas emissions from lower-carbon intensity fuels are essentially the same as traditional fuels.*

****Engines with no aftertreatment devices are compatible with higher blends, up to 100% biodiesel (for use of blends higher than 20% biodiesel, consult your Cat dealer).*

Air Conditioning System

- The air conditioning system on this machine contains the fluorinated greenhouse gas refrigerant R134a or R1234yf. See the label or instruction manual for identification of the gas.
  - – If equipped with R134a (Global Warming Potential = 1430), the system contains 0.9 kg (2.0 lb) of refrigerant which has a CO_2 equivalent of 1.287 metric tonnes (1.418 tons).
  - – If equipped with R1234yf (Global Warming Potential = 0.5), the system contains 0.75 kg (1.65 lb) of refrigerant which has a CO_2 equivalent of 0.0004 metric tonnes (0.0004 tons).

Paint

- Based on best available knowledge, the maximum allowable concentration, measured in parts per million (PPM), of the following heavy metals in paint are:
  - – Barium < 0.01%
  - – Cadmium < 0.01%
  - – Chromium < 0.01%
  - – Lead < 0.01%

Sound Performance

ISO 6396:2008 internal	70 dB(A)
ISO 6395:2008 external	102 dB(A)

- External Sound – The labelled spectator sound power level represents the Guaranteed Value per 2000/14/EC, when properly equipped, and is measured according to the test procedures and conditions specified in ISO 6395:2008. The measurements were conducted at 70% of the maximum engine cooling fan speed.
- Internal Sound – The operator sound pressure level is measured according to the test procedures and conditions specified in ISO 6396:2008 for a cab offered by Caterpillar, when properly installed and maintained and tested with the door and windows closed. The measurements were conducted at 70% of the maximum engine cooling fan speed.
- Hearing protection may be needed when operating with an open operator station and cab (when not properly maintained for doors/windows open) for extended periods or in noisy environment(s).

Oils and Fluids

- Caterpillar factory fills with ethylene glycol coolants. Cat Diesel Engine Antifreeze/Coolant (DEAC) and Cat Extended Life Coolant (ELC) can be recycled. Consult your Cat dealer for more information.
- Cat Bio HYDO™ Advanced is an EU Ecolabel approved biodegradable hydraulic oil.
- Additional fluids are likely to be present, please consult the Operations and Maintenance Manual or the Application and Installation guide for complete fluid recommendations and maintenance intervals.

Features and Technology

- The following features and technology may contribute to fuel savings and/or carbon reduction. Features may vary. Consult your Cat dealer for details.
  - – Advanced hydraulic systems balance power and efficiency
  - – The latest hydraulic oil filter provides longer life with a 3,000-hour replacement interval
  - – Eco mode supports reduced fuel consumption for light applications
  - – One-touch low idle with automatic engine speed control
  - – Boost productivity and increase operating efficiency with optional Cat technologies
  - – Remote flash and remote troubleshoot

Recycling

- The materials included in machines are categorized as below with approximate weight percentage. Because of variations of product configurations, the following values in the table may vary.

Material Type	Weight Percentage
Steel	59.23%
Iron	10.38%
Nonferrous Metal	2.31%
Mixed Metal	9.46%
Mixed-Metal and Nonmetal	0.01%
Plastic	1.28%
Rubber	3.31%
Mixed Nonmetallic	0.00%
Fluid	7.19%
Other	4.41%
Uncategorized	2.76%
Total	100%

A machine with higher recyclability rate will ensure more efficient usage of valuable natural resources and enhance End-of-Life value of the product. According to ISO 16714:2008 (Earthmoving machinery – Recyclability and recoverability –Terminology and calculation method), recyclability rate is defined as percentage by mass (mass fraction in percent) of the new machine potentially able to be recycled, reused, or both.

All parts in the bill of material are first evaluated by component type based on a list of components defined by the ISO 16714:2008 and Japan CEMA (Construction Equipment Manufacturers Association) standards. Remaining parts are further evaluated for recyclability based on material type.

Because of variations of product configurations, the following value in the table may vary.

Recyclability – 89%

For more complete information on Cat products, dealer services, and industry solutions, visit us on the web at **www.cat.com**

© 2026 Caterpillar
All rights reserved

Materials and specifications are subject to change without notice. Featured machines in photos may include additional equipment. See your Cat dealer for available options.

CAT, CATERPILLAR, LET'S DO THE WORK, VisionLink, their respective logos, "Caterpillar Corporate Yellow," the "Power Edge" and Cat "Modern Hex" trade dress as well as corporate and product identity used herein, are trademarks of Caterpillar and may not be used without permission.

AEXQ4121-02 (10-2026)
Replaces: AEXQ4121-01
Build Number: 07E
(N Am)