

CAT® 789(04)
AUTONOMOUS WATER TRUCK

THE CHALLENGE: DUST. THE ANSWER: CAT® WATER SOLUTIONS.

An industry first, the Cat® autonomous water truck is a complete solution that automates the delivery of water to reduce dust and boost safety — optimizing the complete haul road watering process. The Cat 789 autonomous water truck helps dust suppression on site and enhances productivity by enabling mine operations to digitally track water consumption and reduce waste. The vehicle's intelligent on-board system improves efficiency, increases availability, enables consistency, and provides near-continuous operation. This water truck is sold and supported by the local Cat dealer you know and trust.

PROVEN IN THE FIELD

- Built on a proven Cat® 789 truck platform.
- Cat MineStar™ Command is the industry's most proven autonomy solution.
- Equipped with the efficient Cat Water Delivery System (WDS), in the market since 2012.
- Supported and validated by Caterpillar.

AUTONOMOUS WATER DELIVERY WITH CAT® MINESTAR™ COMMAND

- MineStar reports and tracks amount of water delivered to manage the application of water, keeping roads in optimum condition.
- Provides consistent watering to match production targets.
- Technology connected to water delivery system increases efficiency to help optimize your water truck fleet size.

GAIN TRACTION WITH THE CAT WATER DELIVERY SYSTEM (WDS)

- Provides variable water flow based on truck speed
- and determines appropriate flow to conserve water.
- Automatic start and stop eliminates overwatering at road intersections.
- Maintenance-free and self-cleaning water spray heads reduce truck downtime.

ENHANCE SAFETY & PRODUCTIVITY AT YOUR MINE SITE

- Lower dust levels, improve visibility, maintain haul road safety.
- Reduces traction events and removes personnel from potential harm.
- Allows both water trucks and haul trucks to travel more quickly.
- Eliminates need for shift change, breaks, etc.

REDUCE ENVIRONMENTAL IMPACT

- Automated system uses less water.
- The Cat Water Delivery System (WDS) provides variable water flow based on truck speed and determines appropriate flow to conserve water.
- Refilling process is completely automated – water truck recognizes when it's time to refill.

CAT DEALER SUPPORT

- Full support of Cat dealer and parts network
- Cat dealer installation & retrofit kits available
- Eligible for Equipment Protection Plans (EPP) & Customer Value Agreements (CVAs)

789 (04) AUTONOMOUS WATER TRUCK SPECIFICATIONS

Configurations and features may vary by region. Please consult your Cat® dealer for availability in your area.

Engine

Engine Model	Cat® 3516C – HD	
Rated Engine Speed	1,750 rpm	
Gross Power – SAE J1995:2014	1566 kW	2,100 hp
Net Power – SAE J1349:2011	1468 kW	1,969 hp
Emissions Rating	Fuel Optimized	
Torque Rise	170 mm	6.7 in
Bore	215 mm	8.5 in
Stroke	78.1 L	4,766 in^3
Displacement	58.56 L	3,573.6 in^3

- Net Power advertised is the power available at the flywheel when the engine is equipped with air intake system, exhaust system, and alternator.
- Power rating applies at 1,750 rpm when tested under the specified condition for the specified standard.
- Ratings based on SAE J1995 standard air conditions of 25° C (77° F) and 99 kPa (29.32 Hg) barometer. Power based on fuel having API gravity of 35 at 16° C (60° F) and an LHV of 42 780 kJ/kg (18,390 BTU/lb) when engine used at 30° C (86° F).

Weights – Approximate

Rated Gross Machine Weight (RGMW)	324 319 kg	715,000 lb

- Consult your tire manufacturer for maximum tire load.

Weight Distributions – Approximate

Front Axle – Empty*	46%
Front Axle – Loaded	54%
Rear Axle – Empty*	33%
Rear Axle – Loaded	67%

*Depends on configuration.

Final Drives

Double-reduction, planetary, with full floating axles.	
Differential Ratio	2.35:1
Planetary Ratio	10.83:1
Total Reduction Ratio	25.46:1

Transmission

Forward 1	12.6 km/h	7.8 mph
Forward 2	17.1 km/h	10.6 mph
Forward 3	23.1 km/h	14.4 mph
Forward 4	31.2 km/h	19.4 mph
Forward 5	42.3 km/h	26.3 mph
Forward 6	57.2 km/h	35.5 mph
Reverse	11.8 km/h	7.3 mph

- Maximum travel speeds with standard 37.00-R57 tires.

Braking System

Brake Surface – Front	81 693 cm^2	12,662 in^2
Brake Surface – Rear	134 522 cm^2	20,851 in^2
Brake Standards		ISO 3450:2011

Body Hoists

Pump Flow – High Idle	731 L/min	193 gal/min
Relief Valve Setting – Raise	17 238 kPa	2,500 psi
Body Raise Time – High Idle	18.9 seconds	
Body Lower Time – Float	17.3 seconds	
High Idle Body Lower Time – Power	15.6 seconds	

Suspension

Effective Cylinder Stroke - Front	105 mm	4 in
Effective Cylinder Stroke - Rear	93 mm	3.5 in
Rear Axle Oscillation	+/- 5.6 °	

Service Refill Capacities

Fuel Tank	2082 L	550 gal
Fuel Tank (optional)	3785 L	1,000 gal
Cooling System	725 L	192 gal
Crankcase	291 L	77 gal
Differentials and Final Drives	583 L	154 gal
Steering System	189 L	50 gal
Brake/Hoist System	909 L	241 gal
Transmission Tank	76 L	20 gal

Steering

Steering Standards		ISO 5010:2019
Steer Angle	36°	
Turning Diameter – Front	27.53 m	90.32 ft
Machine Clearance Diameter	30.23 m	99.18 ft

Tires

Standard Tire	37.00-R57
Optional Tire	40.00-R57

- Caterpillar recommends the customer evaluate all job conditions and consult the tire manufacturer for proper tire selection.

Cab

Air Conditioning	42 780 kJ/kg	18,390 BTU/lb
Heater / Defroster	11 070 kCal	43,930 BTU
ROPS Certification Rating		Tractor ROPS Rating
789 OEM (Tractor)	117 000 kg	257,940 lb

- The operator sound pressure levels are measured according to work cycle procedures specified in ISO 6394:2008 and ISO 6396:2008 is 80 dB(A).
- The exterior sound power level for the standard machine is tested using ISO 6393:2008 and ISO 6395:2008 procedures is 123 dB(A).
- Hearing protection may be needed when operating with an open operator station and cab (when not properly maintained or doors/windows open) for extended periods or in a noisy environment.
- ROPS (Rollover Protective Structure) for cab offered by Caterpillar meets ISO 3471:2008 ROPS criteria and ISO 13459:2012 for trainer.
- FOPS (Falling Objects Protective Structure) meets ISO 3449:2005 Level II FOPS criteria and ISO 13459:2012 Level II for trainer.

789 (04) AUTONOMOUS WATER TRUCK SPECIFICATIONS

Configurations and features may vary by region. Please consult your Cat® dealer for availability in your area.

Lidar

Power	2A @ 24V
Weight	13.6 kg
Number of Lasers	64 Class 1 – eye safe 905 N·m wavelength
Sealing	Rated to IP67 (± 35 kPa)
Input Voltage Range	10V to 32V
Storage Temperature	-58° F to 194° F (-50° C to 90° C)
EMC Capability	to EC-42 version
Spin Rate	300 rpm-1,200 rpm

GNSS Receiver

Weight	0.8 kg
Humidity	100%
Width	86 mm
Connectors	One 12-pin Deutsch, one antenna TNC
Depth	57 mm
Storage Temperature	-58° F to 185° F (-50° C to 85° C)
Accuracy	< 1 m (With base station corrections.)
Height	187 mm
Electrical Input	9 to 32V DC 120 mA @ 24V DC
Operating Temperature	-40° F to 158° F (-40° C to 70° C)

A-Stop Transmitter

Operating Frequency	919 MHz
Maximum Storage Temperature	-58° F to 185° F (-50° C to 85° C)
Charger Output	2A @ 5V
Charger Input	100-240 V AC (50-60 Hz)
Maximum Operating Temperature	-0.4° F to 149° F (-18° C to 65° C)
Transmit Range	>180 m

On-board A-Stop Receiver

Maximum Operating Temperature	-40° F to 185° F (-40° C to 85° C)
Maximum Storage Temperature	-50° F to 185° F (-50° C to 85° C)

Radars

Dimensions	6.84 in × 3.55 in × 1.94 in (173.7 mm × 90.2 mm × 49.2 mm)
Weight	575 g
Power	1A @ 12V
Type	Electrically scanning radar
Operating Frequency	76.5 GHz

Cat® Water Delivery System (WDS)

Operator selectable coverage	0.2-0.8 L/m² (4 kph - 40 kph)	0.05-0.2 gal/ft² (3 mph - 25 mph)
Maximum water flow	6814 L/min	1,800 gal/min
Water per spray head (minimum)	132.5 L/min	35 gal/min
Water per spray head (maximum)	2271 L/min	600 gal/min
Spray head opening range (minimum)	1 mm	0.04 in
Spray head opening range (maximum)	19 mm	0.75 in
Maximum size debris flushed through spray head	19 mm	0.75 in
Spray width per head (dependent on flow)	4.5-9.1 m	15-30 ft
Spray system hydraulic tank capacity	27.5 L	7.25 gal
Maximum number of rear spray heads	5	
Minimum number of rear spray heads	2	
Maximum number of front/side spray heads	2	
Minimum number of front/side spray heads	0	
Maximum water from cannon (idle)*	2271 L/min	600 gal/min
Maximum water from cannon (high idle)*	6246 L/min	1,650 gal/min
Maximum cannon spray distance*	61 m	200 ft
Wet water pump/hydraulic motor coupling		

*Depends on nozzle orifice and pipe size.

- Coverage rates above 0.6 L/m² may not be available at higher speeds depending on head count and configuration.
- The Auto Mode setting controls water coverage and automatically adjusts to the number of spray heads being used — independent of ground speed. This is an exclusive feature designed into the Cat® WDS software to help water more efficiently.
- Alternatively, manual mode allows the operator to set a water flow rate that is constant regardless of ground speed. This mode is not recommended for daily operation and will reduce watering efficiency and may increase fuel usage.
- Spray head opening is automatically controlled by the system to achieve Auto Mode Coverage or manual mode flow rate.
- Spray heads on competitive water distribution systems require tools and maintenance to change flow and spray pattern. Caterpillar is the only company to have variable active spray heads to regulate water spray.
- Water flow is continually adjusted during operation to conserve water and achieve desired coverage and flow rate.
- Water tanks are offered by local 3rd party providers with customization based on water application and regional customer requirements. Please contact your local Cat dealer, regional OEM Solutions Account manager, or email OEM_Solutions@cat.com for more information on water tank options and attachments.

789 (04) AUTONOMOUS WATER TRUCK DIMENSIONS

All dimensions are approximate.

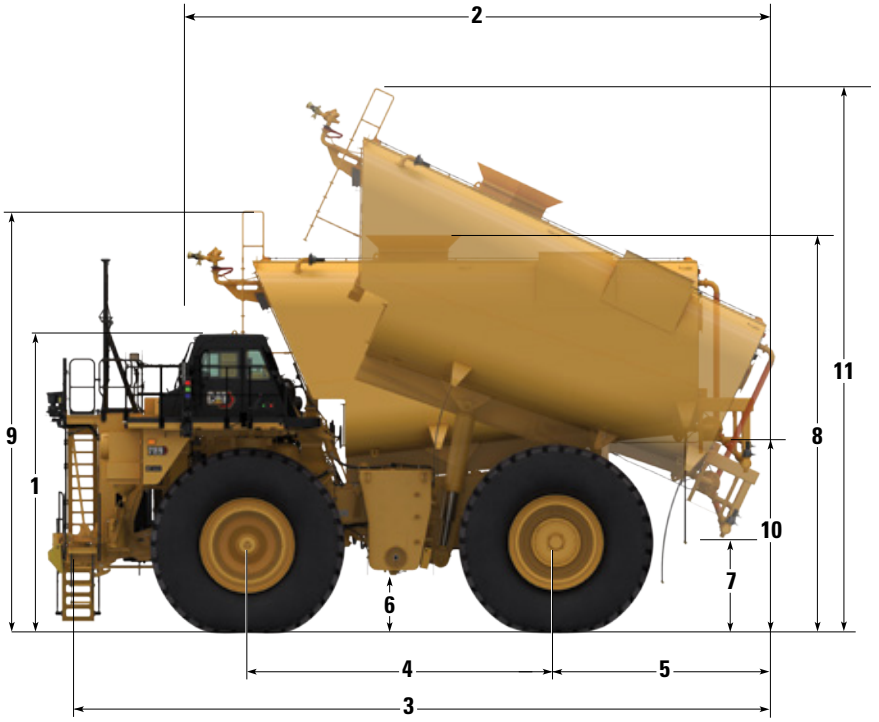



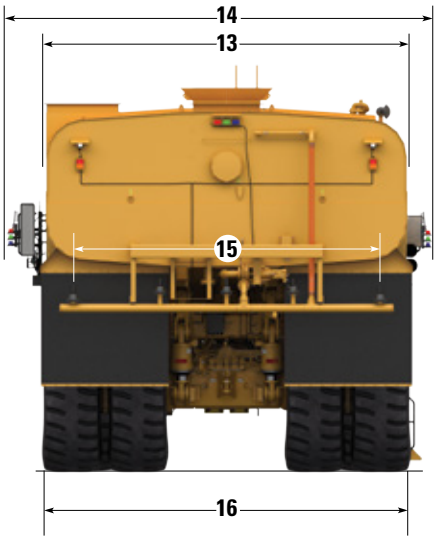

		Ground Force		Austin	
			60 degree raised		60 degree raised
1	Height to Top of ROPS*	5550 mm	18' 3'	5550 mm	18' 3'
2	Overall Tank Length	10 068 mm	33'	9906 mm	32' 6"
3	Overall Machine Length	13 246 mm	43' 6"	14 420 mm	47' 4"
4	Wheelbase	5700 mm	18' 8'	5700 mm	18' 8'
5	Rear Axle to Tail	3856 mm	12' 8"	3856 mm	12' 8"
6	Ground Clearance	1304 mm	4' 3"	1304 mm	4' 3"
7	Ground Clearance (tank raised)	834 mm	2' 9"	150 mm	6"
8	Height to Tank Fill/Coaming	7162 mm	23' 5"	7527 mm	24' 8"
9	Height to Tank Handrails / Ladder on Top	7000 mm	23'	8077 mm	26' 6"
10	Ground Height to Spray Heads	3557 mm	11' 8"	3220 mm	10' 7"
11	Overall Height (tank raised)	11 240 mm	36' 11"	11 697 mm	38' 5"
12	Engine Guard Clearance	1290 mm	4' 3"	1290 mm	4' 3"
13	Base Fabricated Tank Width	7109 mm	23' 4"	6985 mm	22' 11"
14	Standard Truck Operating Width to Outside Mirrors	7757 mm	25' 5"	7757 mm	25' 5"
15	Outside Spray Head Centerline Width	5842 mm	19' 2"	6680 mm	21' 11"
16	Overall Tire Width	7120 mm	15' 5"	7120 mm	15' 5"
17	Fill location (distance from front of tank)	6752 mm	22' 2"	7283 mm	23' 11"

*Dimensions may vary based on tire size, pressure, and load. All dimensions are for reference only and may change for different machine configurations. The 789 truck comes with the single body hoist retention cast mount on axle housing.

789 (04) AUTONOMOUS WATER TRUCK SPECIFICATIONS

Water Tank Configurations

Multiple tank configurations are offered based on customer preference and regional locations.

	Ground Force		Austin	
Water Tank Capacity	151 416 L	40,000 gal	165 000 L	43,588 gal
Bare Chassis Weight	103 700 kg	228,619 lb	103 700 kg	228,619 lb
Water Tank - Max Empty Weight (no WDS)	36 288 kg	80,000 lb	39 000 kg	86,000 lb
Empty Machine Weight (with water tank)	139 988 kg	308,619 lb	142 700 kg	314,619 lb
Machine Weight (with water tank full)	291 105 kg	641,774 lb	297 393 kg	656,103 lb
Target Gross Machine Weight (GMW)*	324 319 kg	715,000 lb	324 319 kg	715,000 lb

NOTE: Machine weights based on configuration. *Target GMW not to exceed weight in above table after attachments are installed.

For truck rimpull and retarding curves, please reference the 789 (04) Off-Highway technical specifications document.

Autonomous watering operation is available with Cat® MineStar™ Command. Requires approved 3rd party Original Equipment Manufacturer (OEM) water tanks.

Standard and Optional Equipment

Standard and optional equipment may vary. Consult your Cat dealer for details.

POWERTRAIN	Standard	Optional
Aftercooler	●	
Air start		○
Automatic starter protection	●	
Cat Engine, 1566 kW (2,100 hp) 3516C, HD, EUI	●	
Cat Engine, 1417 kW (1,900 hp) 3516B, EUI		○
Diesel engine/turbocharged/aftercooled	●	
Electric start	●	
Elevated low idle control	●	
Ether starting aid (automatic)	●	
Exhaust deflector		○
Fan, conventional drive	●	
Fan, variable speed, rockford for use in freezing weather operations		○
Filtration for oil cooler		○
Ground level engine shutdown	●	
Muffler	●	
Muffler, extended exhaust		○
Multi-point oil pressure sensing	●	
Oil renewal system		○
Pre-lube		○

TRANSMISSION	Standard	Optional
Body-up reverse neutralizer	●	
Body-up shift inhibitor	●	
Controlled throttle shifting	●	
Directional shift management	●	
Downshift/reverse shift inhibitor	●	
Individual clutch modulation	●	
Lock-up torque converter	●	
Neutral start switch/coast inhibitor	●	
Oil level sensor	●	
Programmable top gear	●	
Rear axle continuous lubrication/filtration	●	

ELECTRICAL	Standard	Optional
Alternator 105 ampere	●	
Back up alarm	●	
Batteries, 12V (2), 93 amp-hour	●	
Converter, 12V electrical	●	
Electrical system, 24V, 15 amp	●	
LED Lighting system:		
• Backup and hazard lights	●	
• Directional signals, front and rear	●	
• Engine compartment lights	●	
• External payload lights	●	
• Headlights and fog lights	●	
• Lo-hi beam selector	●	
• Ladder light and service deck lights	●	
• Left-hand ladder/Service deck -Stop/ taillights VIMS, blue light	●	
Lighting auxiliary at catwalk and passenger platform		○
Lock out transmission at ground level		○
Payload indicator lights	●	

BRAKING SYSTEM	Standard	Optional
Automatic resistor control	●	
Brake release motor (towing)	●	
Engine overspeed protection	●	
Extended life brake disc material	●	
Oil-cooled, multi-disc (front and rear)/ (service, resistive braking, parking, secondary)	●	

OPERATOR ENVIRONMENT	Standard	Optional
Air cleaner service indicator	●	
Air conditioner	●	
Auxiliary power connection/cigarette lighter	●	
Diagnostic connection port	●	
Dome courtesy light	●	
Entertainment radio ready: 5-amp converter, speakers, antenna, and wiring	●	
Electric hour meter	●	
Electric engine control fault indicator	●	
Gauge panel: Air pressure, Brake oil temperature, Engine coolant temperature, Fuel level	●	
Mirrors, right and left	●	
Speedometer and tachometer	●	
Supplemental steering (automatic)	●	
Traction control system	●	
Transmission gear indicator	●	
Vital Info Management System (VIMS)	●	

CAT TECHNOLOGY PRODUCTS	Standard	Optional
Product Link™ cellular	●	
Product Link satellite		○
Cat MineStar™ Command	●	
Cat Water Delivery System software	●	
Cat MineStar hardware and connectivity packages:		
• Level 1 – Basic (Equipment Tracking)		○
• Level 2 – Premium (Equipment Tracking + Production Recording)		○

OBJECT DETECTION SYSTEM	Standard	Optional
Radar and camera	●	
Camera only (radar ready)		○
Omission, camera and radar		○

SAFETY AND SECURITY	Standard	Optional
Ground level VIMS data port	●	
Ground level battery disconnect	●	
Working at heights handrail	●	
Working at heights package		○
Working at heights service		○
Fire extinguisher, portable		○

Standard and Optional Equipment

Standard and optional equipment may vary. Consult your Cat dealer for details.

FUEL SYSTEMS	Standard	Optional
2082 L (550 gal) capacity fuel tank and fast fill system	•	
3785 L (1,000 gal) capacity fuel tank and fast fill system		○
Fast fill fuel system	•	
Fuel filter basic screen	•	
Fuel filter with separator		○
Fuel filter with separator and heater		○

FLUIDS	Standard	Optional
Antifreeze protection to –35° C (–30° F)	•	
Antifreeze protection to –50° C (–58° F)		○

RIMS AND WHEELS	Standard	Optional
37R57		○
37R57 quick change		○
40R57		○
40R57 quick change		○
Brake wear indicator		○
Hub odometer		○
Rim diffuser		○
Wheel chocks		○

MUD GUARDS	Standard	Optional
Mud guards for standard hydraulic and fuel tanks		○
Mud guards for standard hydraulic and large fuel tank		○

ACCESS	Standard	Optional
Fixed ladder	•	
Powered staircase		○

FRAMES	Standard	Optional
Driveline guard	•	
Mirror heated	•	
Mirror wide and heated		○
Lift assist struts for front and rear hoods		○

COLD WEATHER	Standard	Optional
Starting, cold weather		○
Brake oil recirculating		○

SERVICE	Standard	Optional
Grease injector	•	
Service center		○
Quick connect fitting for engine oil		○

CAT MINESTAR COMMAND	Standard	Optional
A-Stop Transmitter	•	
GNSS Receivers	•	
Lidar	•	
On-board A-Stop Receiver	•	
Radars	•	

CAT WATER DELIVERY SYSTEM (WDS)	Standard	Optional
Controls:		
• Factory installed / Integrated into cab	•	
Water System Monitor:		
• Integrated into cab	•	
• Programmable spray configurations	•	
• Automatic diagnostic messages	•	
Variable Hydraulic Pump Drive:		
• 1,800 gpm at speeds of 3 - 25 mph (4 - 40 kph)	•	
• Auto shut-off	•	
• Soft startup	•	
Stainless Steel Spray Heads:		
• Resists corrosion	•	
• Maintenance free	•	
• Patented design	•	
Independent Hydraulic Cooling System:		
• Minimizes overheating	•	
Water Cannon:		
• Hydraulically controlled	•	
• Optional nozzles		○
• Integrated joystick with cab controls	•	
WDS Camera System: includes three cameras		○
Parts & service available through global Cat dealer network		

WATER TANKS	Standard	Optional
Water tanks are offered by local 3rd party providers with customization based on water application and regional customer requirements.		○
Options include: tie offs, ladders, splash guards, fill chute, rock ejectors, hose reels, working lights, and other options based on request.		○
Spray bar for 3-5 Cat WDS spray heads		○
Side spray mounting for Cat WDS spray heads		○

Please contact your local Cat dealer, regional OEM Solutions Account manager, or email OEM_Solutions@cat.com for more information on water tank options and attachments.

For more information, contact OEM Solutions:

oem_solutions@cat.com | www.cat.com/oemsolutions

Materials and specifications are subject to change without notice. Featured products in photos may include additional equipment. See your Cat dealer for available options.

© 2026 Caterpillar. All Rights Reserved. CAT, CATERPILLAR, LET'S DO THE WORK, Product Link, their respective logos, "Caterpillar Corporate Yellow", the "Power Edge" and Cat "Modern Hex" trade dress as well as corporate and product identity used herein, are trademarks of Caterpillar and may not be used without permission.

PEDJ1421-01 (10-2026)
Build number: 04
(Afr-ME, Asia Pacific, CIS, China, Korea, Taiwan, India, Indonesia, LACD, Pacific Island, SE Asia)