

CAT® 775

OFF-HIGHWAY TRUCK BARE CHASSIS

Caterpillar offers off-highway truck bare chassis designed for specialty machines in a variety of applications — including water trucks, tow tractors, and fuel / lube trucks. When configured as a water truck, the tank capacity is 15,000 gallons (56 775 liters).

These partial machine configurations allow construction, quarry, and mining customers to purchase complete solutions from our global Cat® dealer network — with support every step of the way.

PROVEN CAT® TRUCK PLATFORM

Cat trucks are built for durability, reliability, and efficiency to deliver the performance you need in some of the toughest applications around the world.

APPLICATION-SPECIFIC CAB & ROPS CERTIFICATION

Cat Off-Highway Truck Bare Chassis ROPS is certified to ISO 3471 Tractor criteria, to provide a higher level of protection for towing applications.

OPERATOR EXPERIENCE

Completely redesigned cab for a whole new standard in visibility,comfort, and productivity. Improvements in visibility gain enlarged views of the work area and its surroundings. Enjoy the easy automotive-quality shifting with the new transmission controls. Cat next generation deluxe seat for better operator comfort.

BOOST FUEL EFFICIENCY

Automatically optimize fuel consumption with the adaptive economy mode, which reduces fuel use without affecting productivity and can be engaged with a single button. Conserve fuel with integrated engine idle shutdown by the engine automatically initiating when the truck is in park and idle for a preset amount of time.

SAFETY BUILT IN

As we design a truck, we take the safety of the operator and personnel working on the ground very seriously. Ground level and platform accessible daily check points. Excellent visibility. Solid, stable walking/working platforms with good traction, material shedding, handrails. And the new Traction Control System, returns the truck to solid footing sooner.

SIMPLE SERVICE

This truck is designed to provide operators and technicians with easy access to common service points like engine lockout, machine system lockout, fluid level sight gauges, grease fittings, and access to the engine for regularly scheduled maintenance.

SUPPORTED BY THE CAT DEALER NETWORK

- Full support of Cat dealer and parts network
- Cat dealer installation & retrofit kits available
- Eligible for Equipment Protection Plans (EPP) & Customer Value Agreements (CVAs)

775 OFF-HIGHWAY TRUCK BARE CHASSIS SPECIFICATIONS

Configurations and features may vary by region. Please consult your Cat® dealer for availability in your area.

Engine – U.S. EPA Tier 4 Final/EU Stage V

Engine Model	Cat® C27	
Rated Engine Speed	1,800 rpm	
Gross Power – SAE J1995:2014	615 kW	825 hp
Net Power – SAE J1349:2011	553 kW	742 hp
Net Torque – SAE J1349:2011	4205 N·m	3,101 lb-ft
Bore	137 mm	5.4 in
Stroke	152 mm	6 in
Displacement	27 L	1,648 in^3

Engine – U.S. EPA Tier 2 Equivalent

Engine Model	Cat® C27	
Rated Engine Speed	2,000 rpm	
Gross Power - SAE J1995	615 kW	825 hp
Net Power – SAE J1349:2011	551 kW	749 hp
Net Torque	3781 N·m	2,788 lb-ft
Bore	137 mm	5.4 in
Stroke	152 mm	6 in
Displacement	27 L	1,648 in^3

- The power ratings are tested at the reference conditions for the specified standard.
- Net power advertised is the power available at the rated speed, measured at the flywheel when the engine is equipped with alternator, air cleaner, muffler, and fan.
- Net power advertised is the power available at the flywheel when the engine is equipped with fan at maximum speed, air intake system, exhaust system, and alternator.

Operating Weights – all configurations

Target Gross Machine Weight	111 811 kg	246,502 lb

Operating Weights – with Hoist Cylinders (LRC)

Bare Chassis Weight	34 621 kg	76,326 lb
Payload	77 191 kg	170,177 lb
Front Axle Bare Chassis Weight	21 500 kg	47,399 lb
Front Axle Payload	27 017 kg	59,562 lb
Rear Axle Bare Chassis Weight	13 121 kg	28,928 lb
Rear Axle Payload	66 461 kg	146,521 lb

Operating Weights – without Hoist Cylinders (LRC)

Bare Chassis Weight	34 073 kg	75,118 lb
Payload	77 739 kg	171,385 lb
Front Axle Bare Chassis Weight	21 159 kg	46,648 lb
Front Axle Payload	27 209 kg	59,985 lb
Rear Axle Bare Chassis Weight	12 914 kg	28,470 lb
Rear Axle Payload	50 530 kg	111,400 lb

Operating Weights – with Hoist Cylinders (HRC)

Bare Chassis Weight	35 281 kg	77,781 lb
Payload	76 531 kg	168,722 lb
Front Axle Bare Chassis Weight	22 086 kg	48,691 lb
Front Axle Payload	26 786 kg	59,053 lb
Rear Axle Bare Chassis Weight	13 195 kg	29,090 lb
Rear Axle Payload	49 745 kg	109,669 lb

Operating Weights – without Hoist Cylinders (HRC)

Bare Chassis Weight	34 733 kg	76,573 lb
Payload	77 079 kg	169,930 lb
Front Axle Bare Chassis Weight	21 743 kg	47,935 lb
Front Axle Payload	26 978 kg	59,475 lb
Rear Axle Bare Chassis Weight	12 990 kg	28,638 lb
Rear Axle Payload	50 101 kg	110,454 lb

- LRC = Lesser Regulated Countries. HRC = Highly Regulated Countries.
- Care must be taken when designing any attachments so that the axle weights are not exceeded.

Tires

24.00R35 (E4)

- Productive capabilities of the 775 truck are such that, under certain job conditions, TKPH (TMPH) capabilities of standard or optional tires could be exceeded and, therefore, limit production.
- Caterpillar recommends the customer evaluates all job conditions and consults the tire manufacturer for proper tire selection.

Weight Distributions – Approximate

Front Axle – Empty	52%
Front Axle – Loaded	34%
Rear Axle – Empty	48%
Rear Axle – Loaded	66%

775 OFF-HIGHWAY TRUCK BARE CHASSIS SPECIFICATIONS

Configurations and features may vary by region. Please consult your Cat® dealer for availability in your area.

Final Drives

Differential Ratio	3.64:1
Planetary Ratio	4.80:1
Total Reduction Ratio	17.49:1

Brakes

Brake Surface – Front	655 mm	25.7 in
Brake Surface – Rear	61 269 cm^2	9,497 in^2
Brake Standards	ISO 3450:2011	

Transmission (Tier 4/Stage V)

Forward 1	10.7 km/h	6.6 mph
Forward 2	14.9 km/h	9.3 mph
Forward 3	20.2 km/h	12.6 mph
Forward 4	27.1 km/h	16.9 mph
Forward 5	36.7 km/h	22.8 mph
Forward 6	49.5 km/h	30.8 mph
Forward 7	67.0 km/h	41.6 mph
Reverse	14.0 km/h	8.7 mph

- Maximum travel speeds with standard 24.00R35 (E4) tires.

Transmission (Tier 2 Equivalent)

Forward 1	10.8 km/h	6.7 mph
Forward 2	15.1 km/h	9.4 mph
Forward 3	20.4 km/h	12.7 mph
Forward 4	27.4 km/h	17.0 mph
Forward 5	37.1 km/h	23.0 mph
Forward 6	50.0 km/h	31.1 mph
Forward 7	67.7 km/h	42.0 mph
Reverse	14.2 km/h	8.8 mph

- Maximum travel speeds with standard 24.00R35 (E4) tires.

Body Hoists

Pump Flow – High Idle	448 L/min	118 gal/min
Relief Valve Setting – Raise	17 250 kPa	2,502 psi
Relief Valve Setting – Lower	3450 kPa	500 psi
Body Raise Time – High Idle	9.5 seconds	
Body Lower Time – Float	12.5 seconds	

Suspension

Empty Loaded Cylinder Stroke Front	212 mm	8.3 in
Empty Loaded Cylinder Stroke Rear	137 mm	5.4 in
Rear Axle Oscillation	±9.0°	
Front Axle Wheel Travel	248 mm	9.8 in

Service Refill Capacities

Fuel Tank	795 L	210 gal
Cooling System (Tier 4)	192 L	50.7 gal
Cooling System (Tier 2 Equivalent)	185 L	48.9 gal
Engine Crankcase	90 L	23.8 gal
Differential	218 L	57.6 gal
Final Drives (each)	15 L	4.0 gal
Steering System (includes tank)	54 L	14.3 gal
Hoist and Brake Hydraulic System	322 L	85.1 gal
Transmission and Converter System (Tier 4)	70 L	18.5 gal
Transmission and Converter System (Tier 2 Equivalent)	61 L	16.1 gal
Front Wheels	4.3 L	1.1 gal

Steering

Steering Standards	ISO 5010:2019	
Steer Angle	36°	
Turning Diameter – Front	17.7 m	58 ft
Turning Circle Clearance Diameter	20.2 m	66 ft

Cab

Operator Sound Level (ISO 6396:2008) – Tier 4 Final/Stage V		76 dB(A)
Operator Sound Level (ISO 6396:2008) – Tier 3 and Tier 2 Equivalent		73 dB(A)
ROPS Certification Rating		Tractor ROPS Rating
775 WTR (Tractor)	45 051 kg	99,320 lb

- The operator sound pressure level is measured according to the test procedures and conditions specified in ISO 6396:2008 for the standard machine configuration. The measurement was conducted at 70% of the maximum engine cooling fan speed.
- Hearing protection may be needed when the machine is operated with a cab that is not properly maintained or when the doors or windows are open for extended periods or in a noisy environment
- ROPS for cab offered by Caterpillar meet ISO 3471:2008 for operator and ISO 13459:2012 for trainer.
- FOPS meet ISO 3449:2005 Level II for operator and ISO 13459:2012 Level II for trainer.
- The air conditioning system on this machine contains the fluorinated greenhouse gas refrigerant R134a (Global Warming Potential = 1430). The system contains 2.0 kg (4.4 lbs) of refrigerant, which has a CO_2 equivalent of 2.86 metric tonnes (3.152 tons).
- Note: Welding on ROPS or making modifications to the ROPS may void the ROPS certification. Please contact Caterpillar OEM Solutions if the application requires welding on the machine frame.

775 OFF-HIGHWAY TRUCK BARE CHASSIS DIMENSIONS

All dimensions are approximate.

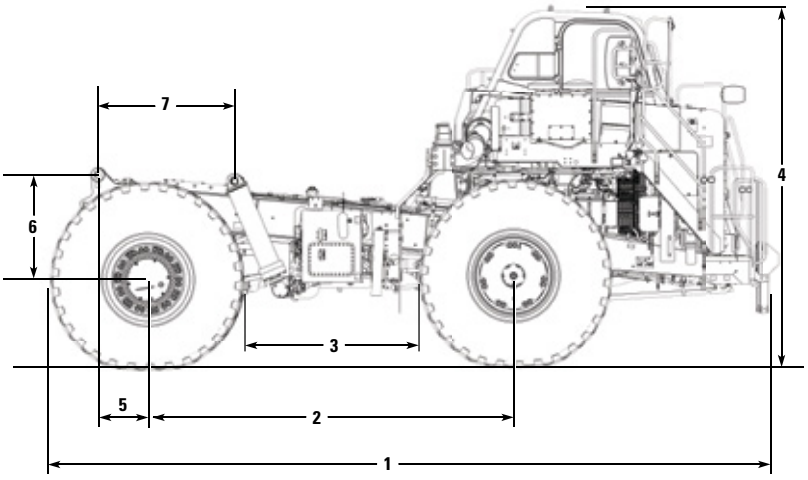

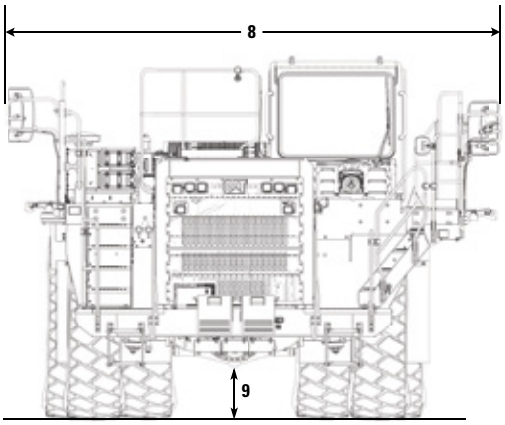

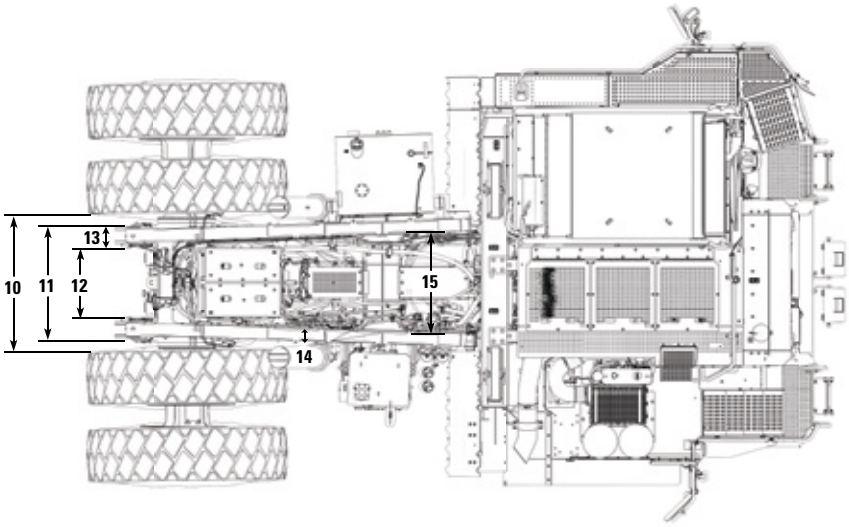

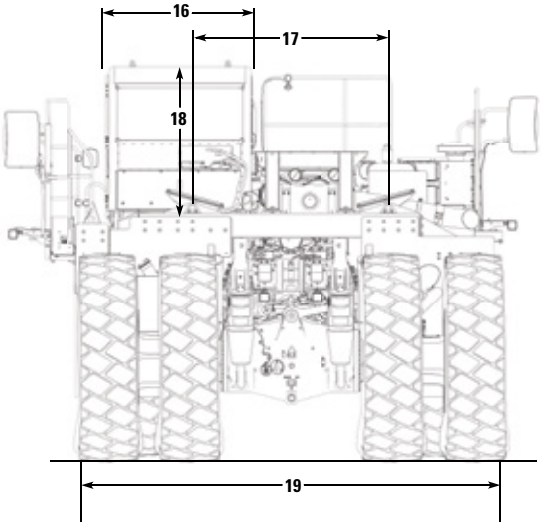

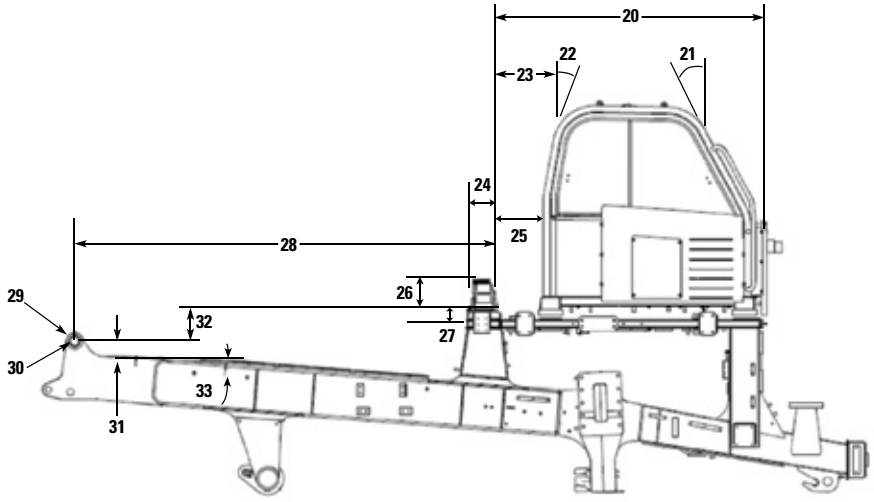

775 OFF-HIGHWAY TRUCK BARE CHASSIS DIMENSIONS

All dimensions are approximate.

Dimensions				
1	Overall Length ** (does not include Wheel Chocks)	8248 mm	27 ft	1 in
2	Wheel Base	4215 mm	13 ft	10 in
3	Distance Between Tires	2023 mm	6 ft	8 in
4	Height to Top of ROPS **	4108 mm	13 ft	6 in
5	Rear Axle to Body Pivot	580 mm	1 ft	11 in
6	Vertical Distance Between Body Pivot and Rear Axle	1120 mm	3 ft	8 in
7	Distance Between Body Pivot and Hoist Cylinders - Horizontal	1586 mm	5 ft	2 in
8	Overall Width	5673 mm	18 ft	7 in
9	Engine Guard Clearance **	703 mm	2 ft	4 in
10	Distance Between Hoist Cylinders	1585 mm	5 ft	2 in
11	Distance Between Body Pivots - Outer	1187 mm	3 ft	11 in
12	Distance Between Body Pivots - Inner	890 mm	2 ft	11 in
13	Body Pin Bearing Width	149 mm	0 ft	6 in
14	Frame Rail Width	140 mm	0 ft	6 in
15	Distance Between Frame Rails	1086 mm	3 ft	7 in
16	Cab Width	1597 mm	5 ft	3 in
17	Distance Between Rocker Pads	2064 mm	6 ft	9 in
18	Height of the Cab from Main Beam	1555 mm	5 ft	1 in
19	Overall Tire Width	4411 mm	14 ft	6 in
20	Distance Between Main Beam and Cab Front	2350 mm	7 ft	9 in
21	Cab Front Angle		16 degrees	
22	Cab Rear Angle		23 degrees	
23	Distance Between Main Beam and Cab Roof	697 mm	2 ft	3 in
24	Main Beam Width	303 mm	1 ft	0 in
25	Distance Between Main Beam and Cab Rear	69 mm	0 ft	3 in
26	Rocker Pad Height	253 mm	0 ft	10 in
27	Main Beam Height	264 mm	0 ft	10 in
28	Distance Between Body Pivot and Main Beam	4025 mm	13 ft	3 in
29	Body Pivot Outer Radius	77 mm	0 ft	3 in
30	Body Pivot Pin Diameter	76 mm	0 ft	3 in
31	Distance Between Body Pivot and Frame	158 mm	0 ft	6 in
32	Distance Between Main Beam and Body Pivot Pin	83 mm	0 ft	3 in
33	Frame Slope Angle		5.5 degrees	

** These dimensions may vary based on tire size, pressure and load. All dimensions are for reference only and may change for different machine configurations.

Standard and Optional Equipment

Standard and optional equipment may vary. Consult your Cat dealer for details.

POWERTRAIN	Standard	Optional
Cat® C27 U.S. EPA Tier 4 Final/EU Stage V or noncertified and U.S. EPA Tier 2 equivalent diesel engine: air filters with precleaner (2), air-to-air aftercooler (ATAAC), electric start, engine idle shutdown, ether starting aid, exhaust muffler, next generation modular radiator (NGMR)	•	
Braking system: extended life brakes, automatic retarder control (ARC), manual retarder (utilizes rear oil-cooled, multiple disc brakes), brake release motor (towing), dry disc brakes (front), brake disconnect switch (front), oil-cooled multiple disc brakes (rear), brake wear indicator (rear), parking brake, secondary brake, service brake	•	
Cat engine brake		○
Aftertreatment system – NOx reduction system (NRS), diesel oxidation catalyst (DOC); demand fan; Mechanically Actuated Electronic Unit Injection (MEUI™) -C fuel system (Tier 4 Final/Stage V only.)	•	
Transmission: 7-speed automatic powershift with electronic clutch pressure control (ECPC), advanced productivity electronic control strategy (APECS); automatic neutral idle, autostall, second gear start	•	

ELECTRICAL	Standard	Optional
Alarm backup	•	
Alternator, 150 amp	•	
Autolube power supply ready	•	
Batteries, maintenance-free, 12V (2), 1,400 CCA combined	•	
Electrical system, 25 amp, 24V to 12V converter	•	
Lighting system: all LED backup lights, directional signals/hazard warning, engine compartment light, headlights with dimmer, operator access courtesy lights, side profile lights, stop/tail lights	•	
Service center containing: battery jump start, breakers with spare fuses, lockout switch, ports – electronic technician (ET) and Vital Information Management System (VIMS™), service lockout switch (power without engine start)	•	

OPERATOR ENVIRONMENT	Standard	Optional
Air cleaner service indicator, fluid level monitoring, fuel level monitoring, display languages (market based)	•	
Air conditioning/heat	•	
Ashtray and cigarette lighter	•	
Automatic tempature control	•	
Cab precleaner		○
Coat hook	•	
Combined shift and hoist lever	•	
Cup holders (4)	•	
Diagnostic connection port, 24V	•	
Entertainment radio ready: 5 amp converter, speakers, antenna, wiring harness	•	
eOMM and real-time grade display	•	
Foot rest	•	
Gauges/indicators: brake oil temperature gauge, coolant temperature gauge, engine overspeed indicator, fuel level, hour meter, speedometer with odometer, tachometer, transmission gear indicator, and preventative maintenance reminder	•	
Horn	•	
Light: courtesy, dome	•	
Mirrors, Heated	•	
Mirror, convex cab, left-side		○
Power port, 24V and 12V (2)	•	
Rollover protection (ROPS)/ Falling object protection (FOPS)	•	
ROPS certification ISO tractor	•	
Rear Camera	•	
Seatbelt, 4-point seat belt with shoulder harness	•	
Seat, deluxe full air suspension	•	
Seat, premium leather, heated and cooled		○
Seat, training with lap belt	•	
Steering wheel, padded, tilt and telescopic	•	
Storage compartment	•	
Sun visor	•	
Surround vision		○
Surround vision with Cat Detect		○
Throttle lock	•	
Window, hinged, right side (emergency exit)	•	
Window, powered, left side	•	
Windshield wiper, intermittent, and washer	•	

Standard and Optional Equipment

Standard and optional equipment may vary. Consult your Cat dealer for details.

OTHER EQUIPMENT	Standard	Optional
Antifreeze	•	
Auto lube	•	
Body down indicator	•	
Camera and Radar		○
Center-mounted rims	•	
Clustered grease fittings	•	
Cold weather packages	•	
Driveline guards	•	
Driveshaft catch loop guard	•	
Engine Bay Mud Coverage		○
Engine crankcase guards	•	
Extended life coolant to -34° C (-30° F)	•	
Fan guards	•	
Fluid fill service center		○
Fuel tank, 795 L (210 gal)	•	
Ground-level battery disconnect	•	
Ground-level engine shutdown	•	
Grouped ground-level filters	•	
Operator maintenance manual (OMM)	•	
Rims 17 × 35	•	
Secondary steering (electric)	•	
Spare rim		○
Suspension, front and rear (EU compliant)	•	
Tie down eyes	•	
Tow hooks, front/tow pin, rear	•	
Wheel chocks		○
Vandalism protection locks	•	

CAT TECHNOLOGY PRODUCTS	Standard	Optional
Advanced Health	•	
Cat MSS with Operator Code	•	
Economy modes, standard and adaptive	•	
Fire Suppression		○
Fire Suppression Ready	•	
Hill Assist with anti-roll-back		○
Overload speed limiter	•	
Product Link™ Dual Mode		○
Product Link radio	•	
Remote flash/Remote Troubleshooting	•	
Seat Belt Reminder System: Seat Belt Alert Seat Belt Inhibit	•	
Traction Control System (TCS)		○

For more information on Cat Truck Bare Chassis, contact OEM Solutions:

oem_solutions@cat.com | www.cat.com/oemsolutions

Materials and specifications are subject to change without notice. Featured products in photos may include additional equipment. See your Cat dealer for available options.

© 2026 Caterpillar. All Rights Reserved. CAT, CATERPILLAR, LET'S DO THE WORK, Product Link, MEUI, their respective logos, "Caterpillar Corporate Yellow", the "Power Edge" and Cat "Modern Hex" trade dress as well as corporate and product identity used herein, are trademarks of Caterpillar and may not be used without permission.

PEDJ1021-05 (10-2026)
Build number: 07
(Global)