

CAT® 785

OFF-HIGHWAY TRUCK BARE CHASSIS

Caterpillar offers off-highway truck bare chassis designed for specialty machines in a variety of applications — including water trucks, tow tractors, and fuel / lube trucks. When configured as a water truck, the tank capacity is 32,000 gallons (121 133 liters).

These partial machine configurations allow construction, quarry, and mining customers to purchase complete solutions from our global Cat® dealer network — with support every step of the way.

PROVEN CAT® TRUCK PLATFORM

Cat trucks are built for durability, reliability, and efficiency to deliver the performance you need in some of the toughest applications around the world.

APPLICATION-SPECIFIC CAB & ROPS CERTIFICATION

Cat Off-Highway Truck Bare Chassis ROPS is certified to ISO 3471 Tractor criteria, to provide a higher level of protection for towing applications.

OPERATOR-FOCUSED ENVIRONMENT

The new cab features the Next Generation operator seat with GenTherm, improved storage, pass through egress, automated temperature control, and an integrated transmission hoist control and jog dial for improved control — providing the operator with a quieter, smoother, more comfortable ride.

POWER TO THE GROUND

The proven Cat 3512E engine offers flexibility both in terms of emission profiles and power ratings. An optional engine meeting U.S. EPA Tier 4 Final and EU Stage V emission standards is available with the Cat Selective Catalytic Reduction (SCR) system.

SAFETY INFUSED

Integrated Cat Detect system, 360-degree surround view, LED lighting, 600 mm (24 in) wide walkways, guarding of rotating components and hydraulic brake system with enhanced traction control system. Optional Working at Heights and Powered Access Stairway.

STREAMLINED SERVICEABILITY

Modular HVAC and radiator, remote troubleshooting and flash updates, optional Cat Health Equipment Insights, Electronic Operation and Maintenance Manual (OMM), and ground level serviceability improve maintenance and reduce downtime.

SUPPORTED BY THE CAT DEALER NETWORK

- Full support of Cat dealer and parts network
- Cat dealer installation & retrofit kits available
- Eligible for Equipment Protection Plans (EPP) & Customer Value Agreements (CVAs)

785 OFF-HIGHWAY TRUCK BARE CHASSIS SPECIFICATIONS

Configurations and features may vary by region. Please consult your Cat® dealer for availability in your area.

Engine

Engine Model	Cat® 3512E	
Rated Engine Speed	1,650 rpm	
Gross Power - SAE J1995:2014	1193 kW	1,600 hp
Net Power - SAE J1349:2011	1125 kW	1,509 hp
Emissions Rating	Fuel Optimized	
Bore	170 mm	6.7 in
Stroke	215 mm	8.5 in
Displacement	58.56 L	3,573 in^3

- Net Power advertised is the power available at the flywheel when the engine is equipped with air intake system, exhaust system, and alternator.
- U.S. EPA Tier 4 Final / EU Stage V available for applicable markets.
- Additional fuel optimized selectable power ratings: 1081 kW (1,450 hp)

Operating Weights – all configurations

Gross Vehicle Weight	249 476 kg	550,000 lb
Front Axle Gross Vehicle Weight	82 327 kg	181,499 lb
Rear Axle Gross Vehicle Weight	167 148 kg	368,498 lb

Operating Weights – with Hoist Cylinders (LRC)

Bare Chassis Weight	85 623 kg	188,766 lb
Payload	163 853 kg	361,234 lb
Front Axle Bare Chassis Weight	47 435 kg	104,576 lb
Front Axle Payload	34 892 kg	76,923 lb
Rear Axle Bare Chassis Weight	38 188 kg	84,190 lb
Rear Axle Payload	128 960 kg	284,308 lb

Operating Weights – without Hoist Cylinders (LRC)

Bare Chassis Weight	83 725 kg	184,582 lb
Payload	165 751 kg	365,418 lb
Front Axle Bare Chassis Weight	46 383 kg	102,257 lb
Front Axle Payload	35 944 kg	79,242 lb
Rear Axle Bare Chassis Weight	37 341 kg	82,322 lb
Rear Axle Payload	129 807 kg	286,175 lb

Operating Weights – with Hoist Cylinders (HRC)

Bare Chassis Weight	86 751 kg	191,253 lb
Payload	162 725 kg	358,747 lb
Front Axle Bare Chassis Weight	48 060 kg	105,954 lb
Front Axle Payload	34 267 kg	75,545 lb
Rear Axle Bare Chassis Weight	38 690 kg	85,296 lb
Rear Axle Payload	128 458 kg	283,201 lb

Operating Weights – without Hoist Cylinders (HRC)

Bare Chassis Weight	84 853 kg	187,068 lb
Payload	164 623 kg	362,931 lb
Front Axle Bare Chassis Weight	47 008 kg	103,634 lb
Front Axle Payload	35 319 kg	77,865 lb
Rear Axle Bare Chassis Weight	37 844 kg	83,431 lb
Rear Axle Payload	129 304 kg	285,066 lb

- LRC = Lesser Regulated Countries. HRC = Highly Regulated Countries.
- Bare chassis weight does not include debris. Weights shown with Michelin 33R51 Tires. The payload includes anything added to the bare chassis.
- Care must be taken when designing any attachments so that the axle weights are not exceeded.

Tires & Rims

33.00 R51 (standard)	36.00 R51 (optional)
610 mm (24") Rims (standard)	660 mm (26") Rims (optional)

- Quick Change Rims optional.
- Caterpillar recommends the customer evaluate all job conditions and consult tire manufacturer for proper tire selection and TKPH (TMPH capabilities.

Weights – Approximate

Rated Gross Machine Weight (RGMW)		
33.00 R51 Tires	249 476 kg	550,000 lb
36.00 R51 Tires	255 826 kg	564,000 lb
Nominal Rated Payload (NRP)		
33.00 R51 Tires	143 tonnes	158 tons
36.00 R51 Tires	147 tonnes	162 tons

- Consult your tire manufacturer for maximum tire load.

Weight Distributions – Approximate

Front Axle – Empty	48%
Front Axle – Loaded	33%
Rear Axle – Empty	52%
Rear Axle – Loaded	67%

Final Drives

Double reduction, planetary with full floating axles.	
Differential Ratio	2.10:1
Planetary Ratio	10.83:1
Total Reduction Ratio	22.75:1

785 OFF-HIGHWAY TRUCK BARE CHASSIS SPECIFICATIONS

Configurations and features may vary by region. Please consult your Cat® dealer for availability in your area.

Braking System

Service Brakes: Four-Corner, Wet Disc, Oil Cooled, Hydraulically Actuated		
Brake Surface – Front	61 270 cm^2	9,487 in^2
Brake Surface – Rear	89 728 cm^2	13,908 in^2
Standards (Service and Secondary)	ISO 3450:2011	
Parking Brake: Four-corner, Multi-disc, Spring applied, Hydraulically Released		

Transmission

Forward 1	12.0 km/h	7.4 mph
Forward 2	16.2 km/h	10.0 mph
Forward 3	22.1 km/h	13.7 mph
Forward 4	29.8 km/h	18.5 mph
Forward 5	40.2 km/h	25.0 mph
Forward 6	57.2 km/h	35.6 mph
Reverse	11.6 km/h	7.2 mph

- Maximum travel speed(s) with standard 33.00 R51 tires.

Body Hoists

Twin, two-stage hydraulic cylinders with snubbing valve.		
Pump Flow – High Idle	847 L/min	223 gal/min
Relief Valve Setting – Raise	17 225 kPa	2,500 psi
Body Raise Time – High Idle	15.0 seconds	
Body Lower Time – Float	15.6 seconds	
Body Power Down – High Idle	15.5 seconds	

Service Refill Capacities

Fuel Tank	1552 L	410 gal
Diesel Exhaust Fluid (DEF) Tank	136 L	36 gal
Cooling System	476 L	126 gal
Crankcase	204 L	54 gal
Front Wheels, Each	27 L	7.1 gal
Differentials and Final Drives	527 L	139 gal
Steering Tank	110 L	29 gal
Steering System (includes tank)	117 L	31 gal
Brake/Hoist Tank	511 L	135 gal
Brake Hoist System (includes tank)	541 L	143 gal
Torque Converter/Transmission System (Includes Sump)	175 L	46 gal

Steering

Steer Angle	25.1°	
Turning Diameter (ISO 7457:1997)	29.4 m	96.6 ft
Steering Standards	ISO 5010:2019	

Suspension

Self-contained nitrogen/oil cylinders, pin-to-pin mounting, top and bottom double shear clevis attachments.		
Effective Cylinder Stroke - Front	320 mm	12.6 in
Effective Cylinder Stroke - Rear	165 mm	6.5 in
Rear Axle Oscillation	+/- 5.4 °	

Cab

Air Conditioning (HFC - 134A refrigerant)		24,500 Btu/hr
Heater / Defroster		33,300 Btu/hr
ROPS Certification Rating		Tractor ROPS Rating
785 WTR (Tractor)	105 000 kg	231,485 lb
Operator Sound pressure level Tested to ISO 6396:2008	80 dB(A)	
Rollover Protective Structure (ROPS) for:		
Operator meets	ISO 3471:2008	
Trainer meets	ISO 13459:2012	
Falling Objects Protective Structure (FOPS) for:		
Operator meets	ISO 3449:2005 Level II	
Trainer meets	ISO 13459:2012 Level II	

- Note: Welding on ROPS or making modifications to the ROPS may void the ROPS certification. Please contact Caterpillar OEM Solutions if the application requires welding on the machine frame.

785 OFF-HIGHWAY TRUCK BARE CHASSIS DIMENSIONS

All dimensions are approximate.

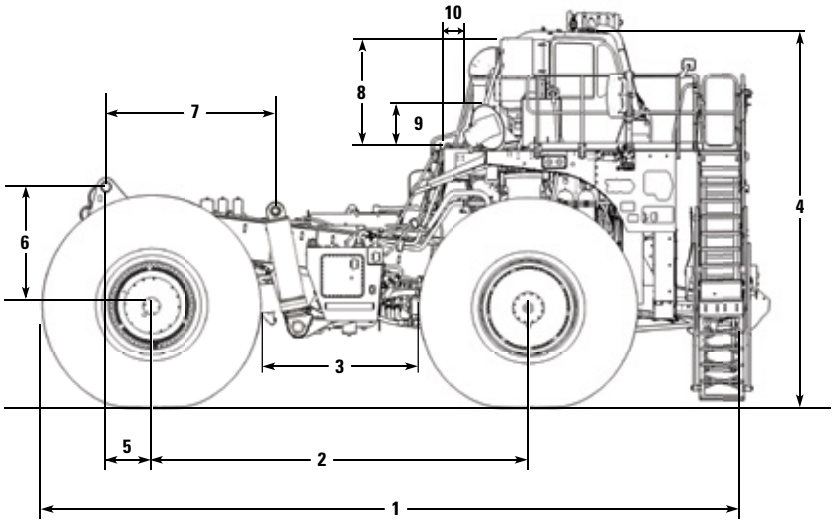

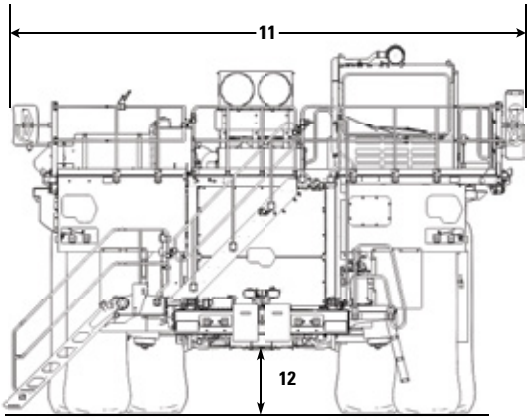

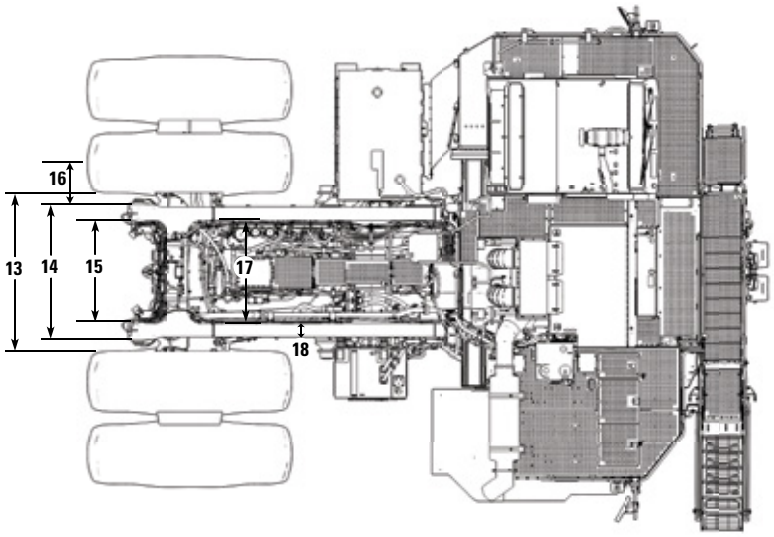

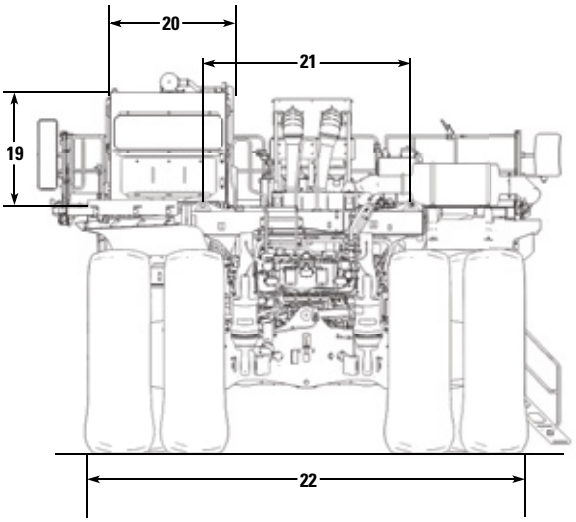

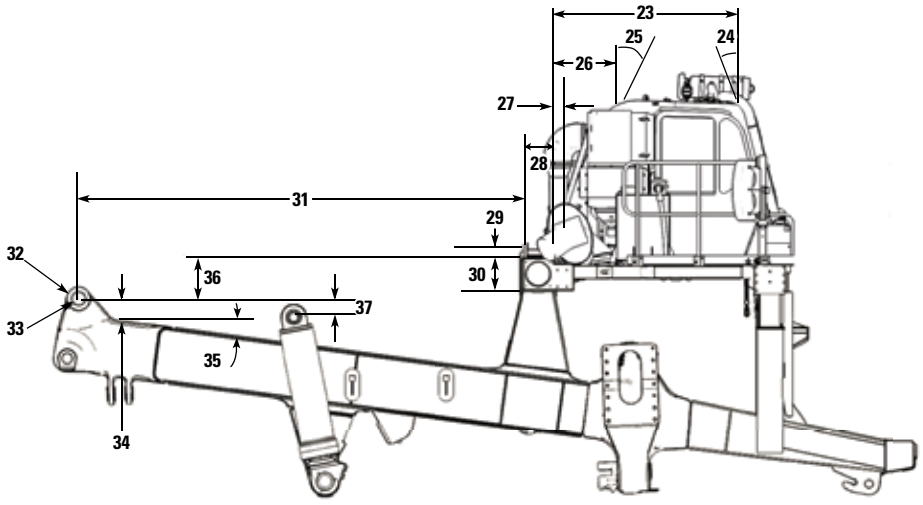

785 OFF-HIGHWAY TRUCK BARE CHASSIS DIMENSIONS

All dimensions are approximate.

Dimensions			
1	Overall Length ** (does not include Wheel Chocks)	9730 mm	31 ft 11 in
2	Wheel Base	5180 mm	17 ft 0 in
3	Distance between Tires **	2165 mm	7 ft 1 in
4	Height to Top of ROPS **	5208 mm	17 ft 1 in
5	Rear Axle to Body Pivot	640 mm	2 ft 1 in
6	Distance between Body Pivot and Rear Axle	1618 mm	5 ft 4 in
7	Distance between Body Pivot and Hoist Cylinders - Horizontal	2251 mm	7 ft 5 in
8	Distance between Main Beam and Top of Air Cleaner	1714 mm	5 ft 8 in
9	Distance between Main Beam and Engine Hood - Vertical	650 mm	2 ft 2 in
10	Distance between Main Beam and Engine Hood - Horizontal	268 mm	0 ft 11 in
11	Overall Width	8100 mm	26 ft 7 in
12	Engine Guard Clearance **	1038 mm	3 ft 5 in
13	Distance between Hoist Cylinders	2348 mm	7 ft 8 in
14	Distance between Body Pivots - Outer	1885 mm	6 ft 2 in
15	Distance between Body Pivots - Inner	1518 mm	5 ft 0 in
16	Body Pivot Bearing Width	175 mm	0 ft 7 in
17	Distance between Frame Rails	1510 mm	4 ft 11 in
18	Frame Rail Width	200 mm	0 ft 8 in
19	Height of the Cab from Main Beam	2085 mm	6 ft 10 in
20	Cab Width	1804 mm	5 ft 11 in
21	Distance between Rocker Pads	3000 mm	9 ft 10 in
22	Overall Tire Width	6277 mm	20 ft 7 in
23	Distance between Main Beam and Cab Front	2088 mm	6 ft 10 in
24	Cab Front Angle		14 degrees
25	Cab Rear Angle		22 degrees
26	Distance between Main Beam and Cab Roof	1044 mm	3 ft 5 in
27	Distance between Main Beam and Cab Rear	53 mm	0 ft 2 in
28	Main Beam Width	323 mm	1 ft 1 in
29	Rocker Pad Height	94 mm	0 ft 4 in
30	Main Beam Height	340 mm	1 ft 1 in
31	Distance between Body Pivot and Main Beam	4662 mm	15 ft 4 in
32	Body Pivot Outer Radius	120 mm	0 ft 5 in
33	Body Pivot Pin Diameter	130 mm	0 ft 5 in
34	Distance between Body Pivot and Frame	230 mm	0 ft 9 in
35	Frame Slope Angle		7.5 degrees
36	Distance between Main Beam and Body Pivot Pin	425 mm	1 ft 5 in
37	Distance between Body Pivot and Hoist Cylinders - Vertical	194 mm	0 ft 8 in

** These dimensions may vary based on tire size, pressure and load. All dimensions are for reference only and may change for different machine configurations.

Standard and Optional Equipment

Standard and optional equipment may vary. Consult your Cat dealer for details.

POWERTRAIN	Standard	Optional
Powertrain for size 33R51 tires	•	
Powertrain for size 36R51 tires		○
Cat 3512E engine: – Automatic engine and DEF thermal management (if applicable) – Automatic low voltage idle management – Air cleaner with pre-cleaner (two) – Turbocharging (four) with air-to-air aftercooler – Mechanical Electronic Unit Injector (MEUI™-A) fuel system – Automatic starter protection – Automatic ether starting aid	•	
– No air – electric starter with 93-amp hour batteries (four), electric horn and automatic lubrication system		○
– Turbine air starter with air tank, air horn and automatic lubrication system		○
– Variable speed fan drive		○
Hydraulic braking system: – Automatic Resistive Braking control, adjustable and automatic – Brake release motor (towing) – Engine over speed protection – Extended life brake disc material – Oil-cooled, multi-disc (front and rear) – Service, Resistive braking, parking, secondary – Park brake integrated with gear selector	•	
Transmission: – Six-speed, automatic power shift with Electronic Clutch Pressure Control (ECPC) – Advanced Productivity Electronic Control Strategy (APECS) – Body-up reverse neutralizer – Body-up shift inhibitor – Downshift/reverse shift inhibitor – Directional shift management – Enhanced Traction Control System – Programmable top speed – Oil level sensor – Neutral coast inhibitor – Neutral start switch – Lock-up torque converter – Rear axle continuous lubrication/ filtration	•	
– Engine pre-lubrication system		○
– Rear axle continuous lubrication/ filtration with cooler		○

FLUIDS	Standard	Optional
Extended Life Coolant to –35° C (–30° F)	•	
Antifreeze/coolant protects to –50° C (–58° F)		○

OPERATOR ENVIRONMENT	Standard	Optional
5V USB charging port	•	
12V auxiliary power connection	•	
Cup holders	•	
Diagnostic connection port COM3 and Ethernet	•	
Delayed Engine Shutdown	•	
Dome courtesy light and map lights	•	
Emergency stop		○
Entertainment radio ready:		
• Speakers	•	
• Radio mounting provisions & 12V power supply	•	
• Antenna (AM/FM/WB/satellite radio)		○
Fire suppression ready	•	
Floor mat, multi-piece and replaceable	•	
Gauges and indicators panel: Critical oil and coolant temperatures, Fuel and DEF level (if applicable), Engine system, brake and transmission fault, Operator selectable max. machine speed by rotary dial, Speedometer, Tachometer	•	
Heated mirrors, right and left	•	
Hoist, body control	•	
Heated mirrors, right and left	•	
Hoist, body control	•	
Interactive touchscreen vehicle information display: – Day/night mode – Action alarm – Quad gauge display	•	
Operator air suspension seat	•	
Operator Door Power Window	•	
Provision for customer accessory mounting	•	
Push button secure start	•	
Retractable front visor	•	
ROPS cab, insulated/sound suppressed	•	
Stairway and walkway access, 600 mm (24 in)	•	
Steering wheel, tiltable, telescopic	•	
Self-filling windshield washer fluid from AC	•	
Storage locations for operator gear	•	
Three-point seat belt for operator seat	•	
Trainer air suspension seat		○
Windshield wiper, intermittent control / washer	•	
Unitized hydraulic powered HVAC with automatic temperature control	•	
Ventilated operator seat	•	
Deluxe Cab: – Advanced cabin filtration system – Catwalk and handrails for rear cab access – Heated, cooled and ventilated front seat – Power right side window – Suspended companion seat – Storage tray		○

Standard and Optional Equipment

Standard and optional equipment may vary. Consult your Cat dealer for details.

ELECTRICAL	Standard	Optional
24V electrical system, low maintenance batteries (2) 93 amp-hour	•	
Alarm, backup	•	
Auxiliary rear work lights, (one) Left Hand (LH) side		○
Brushless alternator, 225 amp	•	
Ground accessible power control box: – Ethernet Vital Information Management System (VIMS™) port and VIMS lamp – Engine starter, transmission and battery lockouts	•	
Jump start/battery charge receptacle	•	
LED payload indicator lamps	•	
LED Lighting system: – Back-up and hazard lights – Curb lights, (one) Right Hand (RH) side, (one) LH side – Turn signals (front and rear) – Engine compartment lights – Headlights with low-high beam selector – Ladder light and service deck lights – Stop/tail lights	•	
– Additional lighting package – Auxiliary VIMS – Body rear – Seat and park brake – Workshop horn		○
Workshop horn		○

OTHER EQUIPMENT	Standard	Optional
2560 L (676 gal) fuel tank (non-Tier 4)		○
Auxiliary "buddy" dumping quick connect	•	
Auxiliary connection 'user defined shutdown'	•	
Auxiliary steering quick connect (towing)	•	
Bumper towing – center pin kit		○
Cold weather start (block heater)		○
Communication Ar – MineStar™ radio		○
Fast fill fuel and DEF remote fill system	•	
Fire extinguisher, portable		○
Five-piece crankcase guards		○
Fuel heater, fuel water separator		○
Fuel tank mud guard		○
Gauge, brake wear indicator		○

OTHER EQUIPMENT (CONTINUED)	Standard	Optional
Ground accessible fluid service center, hydraulic and coolant		○
Guards for rotating components	•	
Hill Start Assist/Anti Roll Back	•	
Hub odometer, kilometers		○
Hydraulic Filters, 1,000 hours	•	
Powered access stairway		○
Remote flash software and troubleshooting	•	
Rim Diffuser		○
Secondary steering (automatic)	•	
Sight glasses for hydraulic oils	•	
Scheduled Oil Sampling (S·O·S℠) ports	•	
Tie off points	•	
Tow hooks (front) and tow pin (rear)	•	
Wheel chocks		○
Working at heights protection		○
Vital Information Management System (VIMS)	•	

CAT TECHNOLOGY PRODUCTS	Standard	Optional
360 degree surround view camera		○
4G cellular/satellite dual mode		○
Connectivity bundle (includes: wireless operator ID, bluetooth key FOB to start)		○
Cruise Control		○
Cyber security	•	
Driver Safety System (DSS) 4.0 Ready		○
Electronic Operations and Maintenance Manual	•	
Ground Control Standard Package	•	
Ground Control Advanced with Anti-lock Braking System (ABS) and Dynamic Stability Control (DSC)		○
Integrated object detection system with touchscreen display	•	
MineStar GPS		○
MineStar communication group (enables MineStar Fleet, Auxiliary)		○
MineStar Command Autonomous-ready		○
Oil Renewal System (ORS) (non-Tier 4)		○
Product Link™ Elite	•	
Remote Troubleshoot	•	
Road Analysis Control (RAC)		○

For more information on Cat Truck Bare Chassis, contact OEM Solutions:

oem_solutions@cat.com | www.cat.com/oemsolutions

Materials and specifications are subject to change without notice. Featured products in photos may include additional equipment. See your Cat dealer for available options.

© 2026 Caterpillar. All Rights Reserved. CAT, CATERPILLAR, LET'S DO THE WORK, Product Link, their respective logos, "Caterpillar Corporate Yellow", the "Power Edge" and Cat "Modern Hex" trade dress as well as corporate and product identity used herein, are trademarks of Caterpillar and may not be used without permission.

AEXJ0120-03 (11-2026)
Build number: 08
(Global)