

CAT® 770

OFF-HIGHWAY TRUCK BARE CHASSIS

Caterpillar offers off-highway truck bare chassis designed for specialty machines in a variety of applications — including water trucks, tow tractors, and fuel / lube trucks. When configured as a water truck, the tank capacity is 9,000 gallons (34 000 liters).

These partial machine configurations allow construction, quarry, and mining customers to purchase complete solutions from our global Cat® dealer network — with support every step of the way.

PROVEN CAT® TRUCK PLATFORM

Cat trucks are built for durability, reliability, and efficiency to deliver the performance you need in some of the toughest applications around the world.

APPLICATION-SPECIFIC CAB & ROPS CERTIFICATION

Cat Off-Highway Truck Bare Chassis ROPS is certified to ISO 3471 Tractor criteria, to provide a higher level of protection for towing applications.

OPERATOR EXPERIENCE

A truck is only as productive as its operator — so we've updated the 770 with some key features to help old and new operators be comfortable and confident while operating the truck. Convenient automatic temperature control and powered left side window. Low-effort access getting in and out of the cab with ample stand up room. Cat Comfort Seat with air suspension and excellent adjustability.

FUEL SAVINGS

Fuel savings are achieved by reducing power between 0.15 to 15% during all phases of operation. Part throttle shifting has the benefit of saving fuel – it no longer needs to apply fuel towards overcoming lost momentum between shifts.

SAFETY BUILT IN

As we design a truck, we take the safety of the operator and personnel working on the ground very seriously. Ground level and platform accessible daily check points. Excellent visibility. Solid, stable walking/working platforms with good traction, material shedding, handrails. And the new Traction Control System, returns the truck to solid footing sooner.

SIMPLE SERVICE

This truck is designed to provide operators and technicians with easy access to common service points like engine lockout, machine system lockout, fluid level sight gauges, grease fittings, and access to the engine for regularly scheduled maintenance.

SUPPORTED BY THE CAT DEALER NETWORK

- Full support of Cat dealer and parts network
- Cat dealer installation & retrofit kits available
- Eligible for Equipment Protection Plans (EPP) & Customer Value Agreements (CVAs)

770 OFF-HIGHWAY TRUCK BARE CHASSIS SPECIFICATIONS

Configurations and features may vary by region. Please consult your Cat® dealer for availability in your area.

Engine – U.S. EPA Tier 4 Final/EU Stage V

Engine Model	Cat® C15	
Rated Engine Speed	1,700 rpm	
Gross Power – SAE J1995:2014	384 kW	515 hp
Net Power – SAE J1349:2011	356 kW	477 hp
Number of Cylinders	6	
Bore	137 mm	5.4 in
Stroke	171 mm	6.7 in
Displacement	15.2 L	927.6 in^3

Engine – U.S. EPA Tier 3 and 2 Equivalent

Engine Model	Cat® C15	
Rated Engine Speed	1,800 rpm	
Gross Power – SAE J1995:2014	381 kW	511 hp
Net Power – SAE J1349:2011	360 kW	483 hp
Number of Cylinders	6	
Bore	137 mm	5.4 in
Stroke	171 mm	6.7 in
Displacement	15.2 L	927.6 in^3

- The power ratings are tested at the reference conditions for the specified standard.
- Net Power advertised is the power available at the flywheel when the engine is equipped with air intake system, exhaust system, and alternator.

Operating Weights – all configurations

Target Gross Machine Weight	71 214 kg	157,000 lb

Operating Weights – with Hoist Cylinders (LRC)

Bare Chassis Weight	25 023 kg	55,166 lb
Payload	46 191 kg	101,834 lb
Front Axle Bare Chassis Weight	15 014 kg	33,100 lb
Front Axle Payload	9199 kg	20,280 lb
Rear Axle Bare Chassis Weight	10 009 kg	22,066 lb
Rear Axle Payload	36 988 kg	81,544 lb

Operating Weights – without Hoist Cylinders (LRC)

Bare Chassis Weight	24 656 kg	54,357 lb
Payload	46 558 kg	102,643 lb
Front Axle Bare Chassis Weight	14 794 kg	32,614 lb
Front Axle Payload	9419 kg	20,766 lb
Rear Axle Bare Chassis Weight	9862 kg	21,743 lb
Rear Axle Payload	37 139 kg	81,877 lb

Operating Weights – with Hoist Cylinders (HRC)

Bare Chassis Weight	25 546 kg	56,319 lb
Payload	45 668 kg	100,681 lb
Front Axle Bare Chassis Weight	15 328 kg	33,792 lb
Front Axle Payload	8885 kg	19,588 lb
Rear Axle Bare Chassis Weight	10 218 kg	22,528 lb
Rear Axle Payload	36 783 kg	81,092 lb

Operating Weights – without Hoist Cylinders (HRC)

Bare Chassis Weight	25 179 kg	55,510 lb
Payload	46 035 kg	101,490 lb
Front Axle Bare Chassis Weight	15 107 kg	33,306 lb
Front Axle Payload	9105 kg	20,074 lb
Rear Axle Bare Chassis Weight	10 072 kg	22,204 lb
Rear Axle Payload	36 930 kg	81,416 lb

- LRC = Lesser Regulated Countries. HRC = Highly Regulated Countries.
- Care must be taken when designing any attachments so that the axle weights are not exceeded.

Tires

18.00R33 (E4)

- Productive capabilities of the 770 truck are such that, under certain job conditions, TKPH (TMPH) capabilities of standard or optional tires could be exceeded and, therefore, limit production.
- Caterpillar recommends the customer evaluates all job conditions and consults the tire manufacturer for proper tire selection.

Weight Distributions – Approximate

Front Axle – Empty	52%
Front Axle – Loaded	34%
Rear Axle – Empty	48%
Rear Axle – Loaded	66%

Final Drives

	T4F	T2/3
Differential Ratio	1.92:1	2.12:1
Planetary Ratio	4.80:1	4.80:1
Total Reduction Ratio	9.26:1	10.176:1

Brakes

Brake Surface – Front	1395 cm^2	216 in^2
Brake Surface – Rear	40 225 cm^2	6,235 in^2
Brake Standards	ISO 3450:2011	

770 OFF-HIGHWAY TRUCK BARE CHASSIS SPECIFICATIONS

Configurations and features may vary by region. Please consult your Cat® dealer for availability in your area.

Transmission – Tier 4 Final/Stage V

Forward 1	11.9 km/h	7.4 mph
Forward 2	16.3 km/h	10.1 mph
Forward 3	22.1 km/h	13.8 mph
Forward 4	29.8 km/h	18.5 mph
Forward 5	40.3 km/h	25.1 mph
Forward 6	54.4 km/h	33.8 mph
Forward 7	73.8 km/h	45.9 mph
Reverse	15.7 km/h	9.8 mph

- Maximum travel speeds with standard 18.00R33 (E4) tires.

Transmission – Tier 3 and 2 Equivalent

Forward 1	11.9 km/h	7.4 mph
Forward 2	16.3 km/h	10.1 mph
Forward 3	22.1 km/h	13.7 mph
Forward 4	29.6 km/h	18.4 mph
Forward 5	40.2 km/h	25.0 mph
Forward 6	54.2 km/h	33.7 mph
Forward 7	73.5 km/h	45.7 mph
Forward 7 (Vietnam)*	59.0 km/h	36.6 mph
Reverse	15.6 km/h	9.7 mph

- Maximum travel speeds with standard 18.00R33 (E4) tires. *Maximum travel speed limited to 59 km/h for Vietnam arrangement.

Body Hoists

Pump Flow – High Idle (Tier 3 and Tier 2)	413 L/min	109.1 gal/min
Pump Flow – High Idle (Tier 4/Stage V)	425 L/min	112.2 gal/min
Pump Flow – High Idle	448 L/min	118 gal/min
Relief Valve Setting – Raise	18 950 kPa	2,750 psi
Relief Valve Setting – Lower	3450 kPa	500 psi
Body Raise Time – High Idle	8 seconds	
Body Lower Time – Float	10 seconds	

Service Refill Capacities

Fuel Tank	795 L	210 gal
Cooling System (Tier 4)	164 L	43.3 gal
Cooling System (Tier 2 Equivalent)	154 L	40.6 gal
Engine Crankcase	90 L	24 gal
Differentials and Final Drives	140 L	37 gal
Steering Tank	36 L	9.5 gal
Steering System (includes tank)	54 L	14 gal
Brake/Hoist Hydraulic Tank	176 L	46.5 gal
Hoist and Brake Hydraulic System	322 L	85 gal
Transmission and Converter System (Tier 4)	70 L	18.5 gal
Transmission and Converter System (Tier 2 Equivalent)	61 L	16.1 gal
Front Wheels	3.4 L	1 gal

Cab

Operator Sound Level (ISO 6396:2008) – Tier 4 Final/Stage V		78.5 dB(A)
Operator Sound Level (ISO 6396:2008) – Tier 2		79.5 dB(A)
ROPS Certification Rating		Tractor ROPS Rating
770 WTR (Tractor)	35 122 kg	77,430 lb

- The operator sound pressure level is measured according to the test procedures and conditions specified in ISO 6396:2008 for the standard machine configuration. The measurement was conducted at 80% of the maximum engine cooling fan speed.
- Hearing protection may be needed when the machine is operated with a cab that is not properly maintained or when the doors or windows are open for extended periods or in a noisy environment.
- The air conditioning system on this machine contains the fluorinated greenhouse gas refrigerant R134a or R1234yf. Refer to the machine labeling for identification of the gas.
- If equipped with R134a (Global Warming Potential = 1430), the system contains 1.9 kg (4.2 lb) of refrigerant which has a CO_2 equivalent of 2.71 metric tonnes (2.99 tons)
- If equipped with R1234yf (Global Warming Potential = 0.501), the system contains 1.85 kg (4.1 lb) of refrigerant which has a CO_2 equivalent of 0.001 metric tonnes (0.001 tons).
- Rollover protective structure (ROPS) for cab offered by Caterpillar meets ISO 3471:2008 for operator and ISO 13459:2012 for trainer ROPS criteria.
- Falling Objects Protective Structure (FOPS) meets ISO 3449:2005 Level II for operator and ISO 13459:2012 Level II for trainer FOPS criteria.
- Note: Welding on ROPS or making modifications to the ROPS may void the ROPS certification. Please contact Caterpillar OEM Solutions if the application requires welding on the machine frame.

Steering

Steering Standards	ISO 5010:2019	
Steer Angle	40.5°	
Turning Diameter – Front	17.6 m	57.7 ft
Turning Circle Clearance Diameter	20.3 m	66.6 ft

Suspension

Empty to Loaded Cylinder Stroke – Front	234 mm	9.2 in
Empty to Loaded Cylinder Stroke – Rear	149 mm	5.9 in
Rear Axle Oscillation	± 8.9°	

770 OFF-HIGHWAY TRUCK BARE CHASSIS DIMENSIONS

All dimensions are approximate.

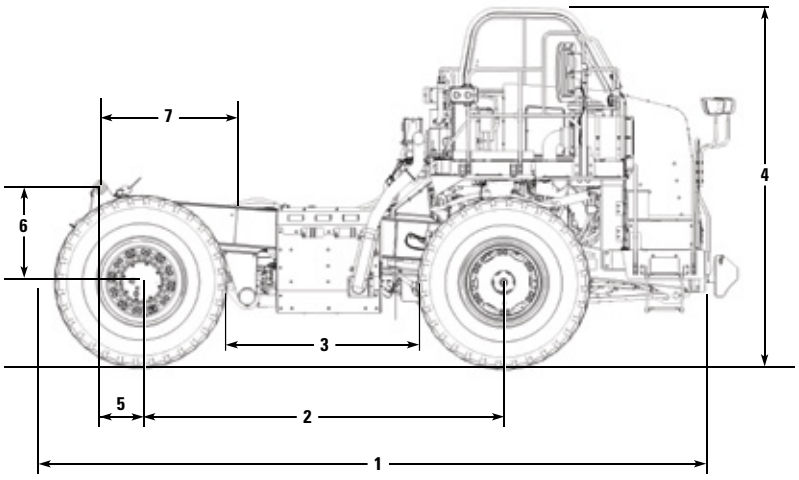

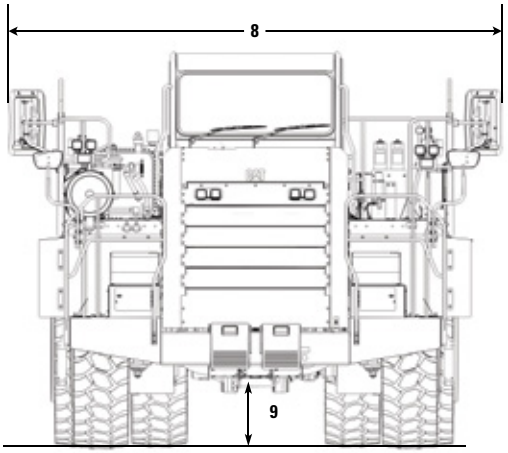

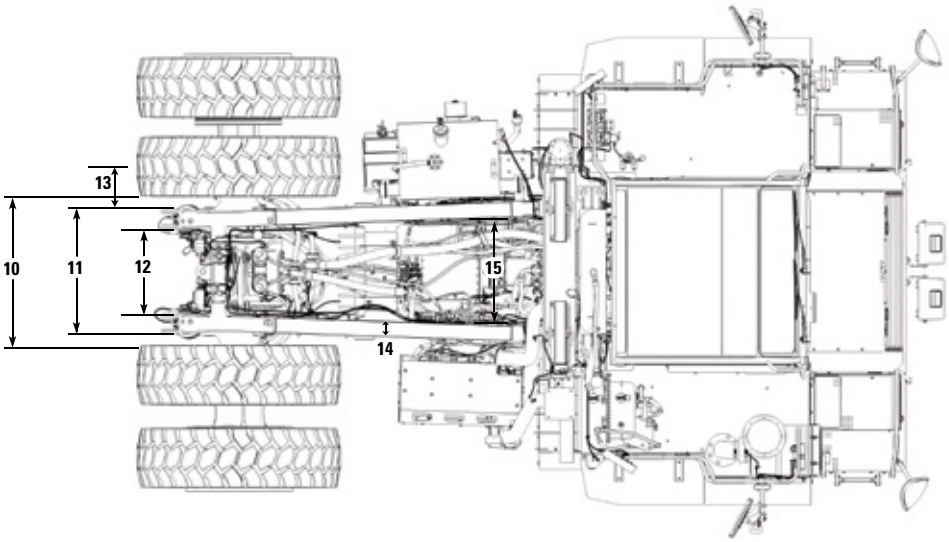

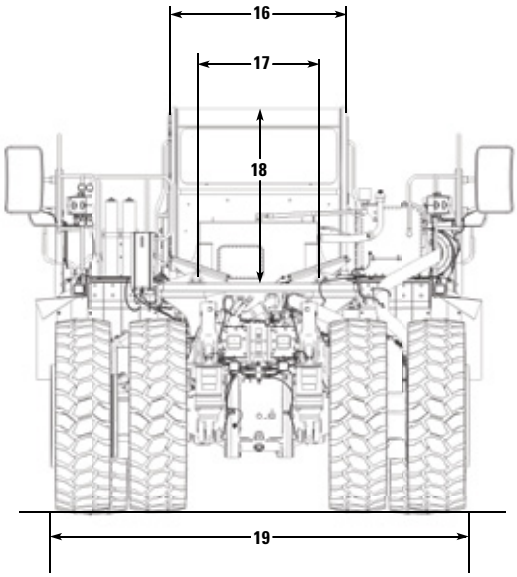

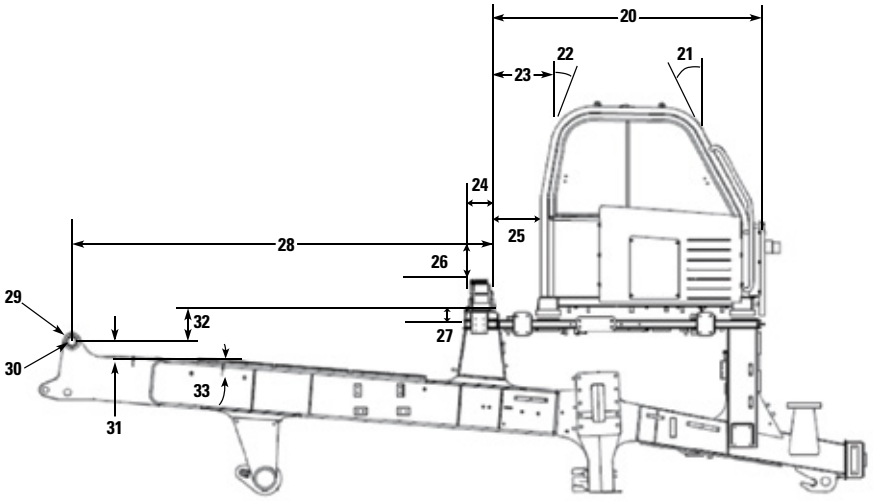

770 OFF-HIGHWAY TRUCK BARE CHASSIS DIMENSIONS

All dimensions are approximate.

Dimensions				
1	Overall Length ** (does not include Wheel Chocks)	8234 mm	27 ft	0 in
2	Wheel Base	3960 mm	13 ft	0 in
3	Distance Between Tires	2091 mm	6 ft	10 in
4	Height to Top of ROPS **	3857 mm	12 ft	8 in
5	Rear Axle to Body Pivot	454 mm	1 ft	6 in
6	Vertical Distance Between Body Pivot and Rear Axle	1023 mm	3 ft	4 in
7	Distance Between Body Pivot and Hoist Cylinders - Horizontal	1224 mm	4 ft	0 in
8	Overall Width	4780 mm	15 ft	8 in
9	Engine Guard Clearance **	335 mm	1 ft	1 in
10	Distance Between Hoist Cylinders	1144 mm	3 ft	9 in
11	Distance Between Body Pivots - Outer	784 mm	2 ft	7 in
12	Distance Between Body Pivots - Inner	551 mm	1 ft	10 in
13	Body Pin Bearing Width	180 mm	0 ft	7 in
14	Frame Rail Width	139 mm	0 ft	6 in
15	Distance Between Frame Rails	1006 mm	3 ft	4 in
16	Cab Width	1691 mm	5 ft	7 in
17	Distance Between Rocker Pads	1200 mm	3 ft	11 in
18	Height of the Cab from Main Beam	1695 mm	5 ft	7 in
19	Overall Tire Width	3693 mm	12 ft	1 in
20	Distance Between Main Beam and Cab Front	2208 mm	7 ft	3 in
21	Cab Front Angle		28.5 degrees	
22	Cab Rear Angle		10 degrees	
23	Distance Between Main Beam and Cab Roof	437 mm	1 ft	5 in
24	Main Beam Width	283 mm	0 ft	11 in
25	Distance Between Main Beam and Cab Rear	314 mm	1 ft	0 in
26	Rocker Pad Height	268 mm	0 ft	11 in
27	Main Beam Height	80 mm	0 ft	3 in
28	Distance Between Body Pivot and Main Beam	3273 mm	10 ft	9 in
29	Body Pivot Outer Radius	134 mm	0 ft	5 in
30	Body Pivot Pin Diameter	76 mm	0 ft	3 in
31	Distance Between Body Pivot and Frame	112 mm	0 ft	4 in
32	Distance Between Main Beam and Body Pivot Pin	249 mm	0 ft	10 in
33	Frame Slope Angle		4.1 degrees	

** These dimensions may vary based on tire size, pressure and load. All dimensions are for reference only and may change for different machine configurations.

Standard and Optional Equipment

Standard and optional equipment may vary. Consult your Cat dealer for details.

POWERTRAIN	Standard	Optional
Air cleaner with precleaner (1)	•	
Air-to-Air Aftercooler (ATAAC)	•	
Automatic cold mode idle control	•	
Auto neutral idle	•	
Auto stall	•	
Braking system, hydraulic actuated: Automatic Retarder Control (ARC) (utilizes rear oil-cooled, multiple disc brakes), brake release motor (towing), caliper-disc (front), extended life brakes, oil-cooled – multiple disc (rear), parking, secondary, service	•	
Brake wear indicator (Tier 4/Stage V)	•	
Brake wear indicator (Tier 3 and Tier 2)		○
Cat® C15 Diesel Engine	•	
Cat engine brake		○
Electric start	•	
Engine idle shutdown	•	
Second gear start	•	
Transmission – 7-speed automatic powershift with electronic clutch pressure control with advanced productivity electronic control strategy (APECS), body up-shift inhibitor, controlled throttle shifting, directional shift management, downshift inhibitor, neutral start switch, neutral coast inhibitor, reverse shift inhibitor, reverse neutralizer during dumping, programmable top gear selection	•	
Turbocharger	•	

ELECTRICAL	Standard	Optional
Alarm backup	•	
Batteries, maintenance-free, 12V (2), 190 amp-hour	•	
Lighting system: backup light, directional signals/hazard warning (front and rear LED), LED headlights with dimmer, operator access courtesy lights	•	

OPERATOR ENVIRONMENT	Standard	Optional
Advisor display, bronze	•	
Air conditioning	•	
Coat hook	•	
Cup holders (4)	•	
Diagnostic connection port, 24V	•	
Entertainment radio ready: 5 amp converter, speakers, antenna, wiring harness	•	
Fluid and fuel system monitoring (Tier 4 only)	•	
Fluid and fuel system monitoring (Tier 3 and Tier 2)		○
Gauges/indicators: service indicator – electronic, brake oil temperature gauge, coolant temperature gauge, hour meter, tachometer, engine overspeed indicator, fuel level, speedometer with odometer, transmission gear indicator	•	
Heater/defroster (11 070 kCal/43,930 BTU)	•	
Hoist shift lever with integrated fingerprint control	•	
Horn, electric	•	
Lights: courtesy, dome	•	
Lights, Halogen		○
Mirrors	•	
Mirrors, heated		○
Power port, 12V	•	
Visibility package (WAVS)		○
Rollover protective structure (ROPS) cab and falling object protective structure (FOPS) cab	•	
Seat, full air suspension, 4-point seat belt with shoulder harness	•	
Seat belt reminder system: Seat belt alert	•	
Seat belt inhibit		○
Trainer seat, lap belt, with seat belt reminder	•	
Steering wheel – padded, tilt, and telescopic	•	
Storage compartment	•	
Sun visor, tinted glass	•	
Throttle lock	•	
Windshield wiper (intermittent) and washer	•	

Standard and Optional Equipment

Standard and optional equipment may vary. Consult your Cat dealer for details.

OTHER EQUIPMENT	Standard	Optional
Adaptor fast fill – fuel		○
Body down indicator	●	
Cab air filter	●	
Cab precleaner		○
Clustered lube	●	
Coolant heater		○
Ether aid		○
Extended life coolant to -35° C (-30° F)	●	
Fan, hydraulic demand	●	
Four (4) batteries (Tier 3 and Tier 2 only)		○
Fuel heater		○
Fuel tank (530 L/140 gal)	●	
Guard, driveline	●	
Guard, engine compartment	●	
Guard, engine crankcase	●	
Guard, mud	●	
Guard, overhead		○
Ground-level battery disconnect	●	
Ground-level engine shutdown	●	
QR code - parts book	●	
Reservoirs (separate): brake/converter/hoist, steering, transmission/torque converter	●	
Rims 15 x 33	●	
Service platform, left and right-side	●	
Standard lube/auto lube		○
Supplemental steering (automatic)	●	
Suspension, front and rear	●	
Spare rims		○
Tie down eyes	●	
Tire Pressure Management System (TPMS)		○
Tow hooks, front/tow pin, rear	●	
Wheel chocks		○
Vandalism protection locks	●	

CAT TECHNOLOGY PRODUCTS	Standard	Optional
Advanced health	●	
Cat Detect Surround Vision	●	
Economy modes, standard and adaptive	●	
Product Link™	●	
Traction Control System (TCS)		○

For more information on Cat Truck Bare Chassis, contact OEM Solutions:

oem_solutions@cat.com | www.cat.com/oemsolutions

Materials and specifications are subject to change without notice. Featured products in photos may include additional equipment. See your Cat dealer for available options.

© 2026 Caterpillar. All Rights Reserved. CAT, CATERPILLAR, LET'S DO THE WORK, Product Link, their respective logos, "Caterpillar Corporate Yellow", the "Power Edge" and Cat "Modern Hex" trade dress as well as corporate and product identity used herein, are trademarks of Caterpillar and may not be used without permission.

PEDJ1019-03 (10-2026)
Build number: 07
(Global)