PL83

Pipelayer

Engine		
Engine Model	Cat® C15 ACERT™	
Net Power – ISO 9249	231 kW	310 hp
Net Power – ISO 9249 (Metric)		314 hp

Weights		
Operating Weight	48 477 kg	106,807 lb
Lift Capacity		
Lift Capacity at Tipping Point – ISO 8813	72 575 kg	160,000 lb

PL83 Pipelayer Features

Performance
Improved hydraulics offer greater response and more precise control. New heavy duty winch works with updated hydraulic system for greater machine productivity.

Slope Capability
Lengthened track-roller-frame and repositioned rear idler puts more track on the ground, enhancing slope capability.

Lift Capacity
New counterweight profile adds more weight providing increased lift capacity. The PL83 has a rated lift capacity of 72 575 kg (160,000 lb).

Operator Interface
New control handle puts boom and hook functions in the operator's right hand. Enclosed cab option aids operator comfort and offers outstanding visibility. New dual brake pedals enhance machine control, especially on slopes and for turning within a tight pipeline right-of-way.

Safety
Additional large surface mirrors enhance visibility for the operator, and a modified block set design reduces the profile for greater visibility to the pipe. New, easy-to-service ladder design offers enhanced access/egress to the operator station.

Transportability
New lower winch profile reduces shipping envelope and aids transportability. New bolt-on block horn has been added to the front of the machine for more convenient transport/storage of the block set.

Contents

Pipelayer....3
Operator Station....4
Implement and Steering Controls....5
Enclosed Cab....6
Engine and Power Train....7
Structure....8
Undercarriage....8
Integrated Technologies....9
Sustainability....9
Serviceability....10
Safety....11
Renowned Cat Dealer Support....11
PL83 Specifications....12
PL83 Standard Equipment....15
PL83 Mandatory Attachments and Optional Equipment....15

Cat® Pipelayers have been the standard of the pipeline industry for decades. A worldwide network of Cat dealers, in tune with the special high production needs of pipeliners, supports these durable and dependable machines. Cat Pipelayers are purpose-built to meet the unique demands of pipeline customers. And like every Cat machine, pipelayers are designed for long life, serviceability and rebuild capability to help keep owning and operating costs low. The PL83 answers customer needs for increased lift capacity, enhanced slope capability, ease of operation, performance and transportability.

Pipelayer

Integrated, robust components

Winches

New heavy-duty winch design works with updated machine hydraulics for greater productivity. Boom and hook draw works are driven by independent hydraulic winches. Oil-disc brakes provide smooth operation and positive retention of boom and hook positions. A modular, pin-on design allows for fast replacement and easy field service. Interchangeable parts between hook and boom winch assemblies help reduce cost and downtime. The winch profile has been reduced to enhance visibility and meet critical transport requirements for rail shipment.

Counterweight

New counterweight profile adds more counterweight, increasing lift capacity. Segments are contoured to provide a low center of gravity and enhanced visibility to the front and side. The counterweight is extended hydraulically for improved load balance and clearance. Segments are splined for ease of assembly and disassembly. The PL83 has a rated lift capacity of 72 575 kg (160,000 lb).

Boom

The light weight, durable boom features high tensile strength steel construction for narrow structures and maximum visibility to the work area. Replaceable boom-mount bearings aid serviceability and long life.

Blocks and Hook

Updated block set profile enhances visibility to the pipe and helps take advantage of the full length of the boom. The heavy-lifting components include hook and boom blocks with sleeve bearings, a forged hook with latch and serviceable handle, and ductile iron sheaves. A bolt-on block horn has been added to the front of the machine for convenient storage of the block set during transport.

Drawbar

A robust drawbar tows a wide range of attachments for maximum versatility.

Operator Station

Designed for Productive Comfort

Caterpillar designs operator stations for maximum productivity. Operator comfort features and excellent visibility all around the machine help operators work more efficiently and contribute to job site safety. Customers may choose an Open Cab (OROPS), an Enclosed Cab with single pane glass, or an Arctic Cab with Dual Pane glass.

- A Roll Over Protection Structure (ROPS) provides added operator protection with an open or enclosed cab.
- A more durable access ladder design aids access/egress to the operator station, and can be removed to minimize the machine's shipping envelope.
- Additional mirrors further enhance the operator's visibility all around the machine.
- Ergonomically designed seat is positioned for enhanced visibility to the trench and for convenient access to key operator control levers and pedals.
- Monitoring system provides instant feedback on the condition of operating systems and records performance data for diagnostics and to help manage undercarriage wear. The system also features a digital and gauge-type tachometer.
- 12-volt outlets power devices like cell phones and laptop computers.

Implement and Steering Controls

Ergonomically Designed for Ease of Operation

Pipelayer Control

Right joystick places all of the boom, hook and counterweight function control in one hand. Low-effort, ergonomically designed control handle allows simultaneous, precise positioning of the load line and boom.

1) Increment/decrement buttons on pipelayer control handle provide continuous adjustable throttle.
2) Thumb rocker controls the counterweight functions.
3) Joystick forward lowers the hook and joystick back raises the hook. Joystick left lowers the boom and joystick right raises the boom.
4) Quick drop control.
5) Rocker switch allows the operator to increase/decrease engine speed to a set level with the touch of a button.

Quick Drop Control

The new quick drop control, when pushed, will allow the load on the hook to free fall to the ground. This control is to be used only in emergency situations where the load must be released immediately.

Dual Brake Pedal Controls

Dual brake pedal controls provide enhanced maneuverability and steering control, especially in slope applications. Brakes are spring applied and hydraulically actuated.

PL83 Steering Control

Dual-twist tiller control with standard differential steering controls direction and degree of turns, forward/reverse shifting, and gear selection in a single control handle. One hand steering enhances operator comfort.

Enclosed Cab

Designed with Pipeline Productivity in Mind

The optional enclosed cab is designed by Caterpillar specifically for demanding pipeline applications. The cab is designed to work with the Rollover Protective Structure (ROPS), and is fully insulated with a heater. Air conditioning is available as an option.

Glass area is maximized for excellent sight lines around the machine and to the trench to aid productivity and enhance job site safety. A skylight window provides a view to the boom and upper block.

The cab includes eight additional halogen lights: three facing forward, two to the rear, two to the boom side and one to the winch side. Wipers provide a clearer view during inclement weather.

Arctic Arrangement

An arctic arrangement equips the pipelayer for optimal performance in arctic conditions. The Arctic Cab has many of the same operator comfort features as the enclosed cab, but adds dual pane windows for cold weather environments. The arrangement also incorporates fluids, final drive and roller seals, and batteries designed to perform in severe cold weather environments.

Engine and Power Train

Powerful Efficiency

Engine

The Cat C15 engine with ACERT™ Technology provides the large displacement and high torque rise for the power needed on challenging jobs. Matched to the high-efficiency torque divider and electronically controlled power shift transmission, the C15 ACERT engine will provide years of dependable service.

Constant Net Horsepower

Constant net horsepower maintains high standards of performance and response. The engine automatically adjusts to maintain power output and conversely lowers output when demands are low. This provides significant fuel savings in cooler climates and during long engine idle times typical of pipeline applications.

Planetary Power Shift Transmission

The planetary power shift transmission offers smooth shifting and quick speed and directional changes for maximum productivity. With three speeds forward and three speeds reverse, the transmission utilizes large diameter, high capacity, oil-cooled clutches for long life. An oil-to-water cooler facilitates maximum cooling capacity, and forced oil flow lubricates and cools clutch packs for long life.

PL83 Differential Steering System

A planetary differential turns the machine by speeding up one track and slowing the other, while maintaining full power to both. This contributes to superior maneuverability, as well as enhanced slope capability. Differential steering also aids performance in soft underfoot conditions because both tracks are powered during turns. The low effort steering tiller aids ease of operation.

Structure

Underlying Strength

The Pipelayer main frame is engineered to handle the most demanding applications.
The mainframe is built to absorb high impact shock loads and twisting forces, and full box section frame rails are designed to keep components rigidly aligned.
Heavy steel castings add strength to the main case, center saddle and front cross member for outstanding durability. Top and bottom rails are continuous rolled sections, with no machining or welding, to provide superior mainframe durability.
The final drives are elevated well above the ground level work area to protect them from impact loads, abrasion and contaminants.

Caterpillar uses robotic welding techniques in the assembly of the case and frames. The deep penetration and consistency of robotic welding insures quality for long life and durability.

Undercarriage

Engineered for Performance

The PL83 features a non-suspended, Cat elevated sprocket undercarriage. Track roller frame length has been increased by 128 mm (5.03 in), and the rear idler has been moved down and rearward, resulting in more track on the ground to enhance machine stability, especially on steep slopes.

Undercarriage components are built for long life and ease of serviceability. Rollers and idlers feature Duo-Cone™ seals to help prevent oil loss and dirt entry. Tubular roller frames resist bending and twisting, with added reinforcement where operating loads are highest. Cat Tough Steel™ sprocket segments are precision machined after heat treat for proper fit. Segments can be removed or replaced without breaking the track.

Pipelayer track is designed for high-impact and high load applications. The Positive Pin Retention Sealed and Lubricated Track is an exclusive Caterpillar design that locks the link to the pin for enhanced service life. Track shoes help optimize the machine for performance in demanding underfoot conditions. The PL83 is equipped with 762 mm (30 in) medium service track shoes with sealed and lubricated track (48 sections).

Integrated Technologies

Solutions to Make Work Easier and More Efficient

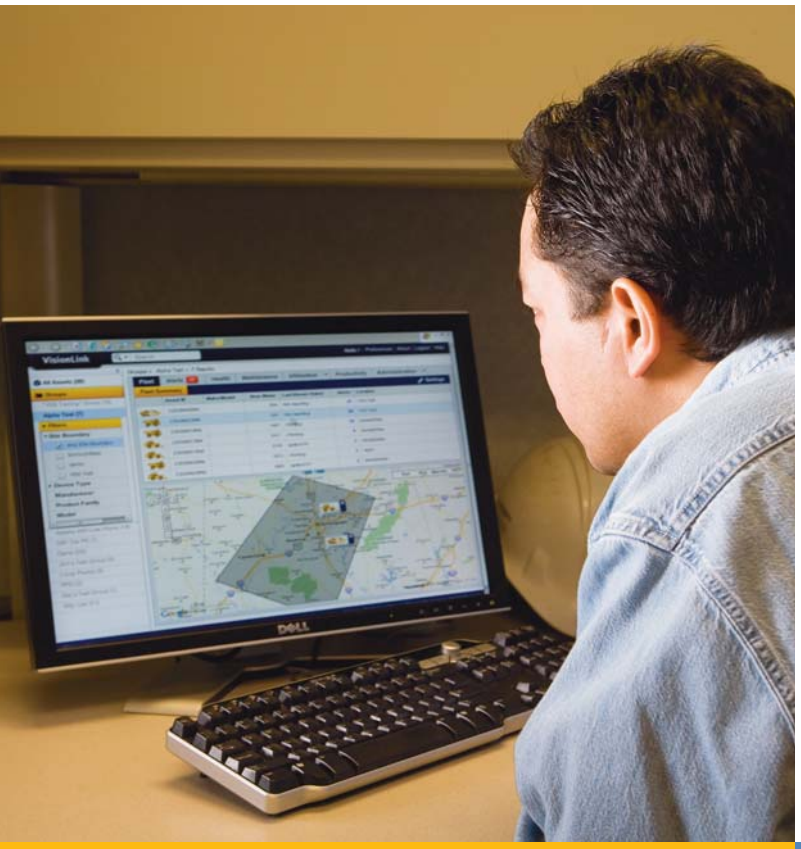

Cat Product Link*

Remote monitoring with Product Link improves overall fleet management effectiveness. Product Link is deeply integrated into machine systems. Events and diagnostic codes, as well as hours, fuel, idle time and other detailed information are transmitted to a secure web based application, VisionLink™. VisionLink includes powerful tools to convey information to users and dealers, including mapping, working and idle time, fuel level and more.

**Product Link licensing not available in all areas.*

Load Monitor Ready

The PL83 is Load Monitor Indicator (LMI) ready from the factory and can accept regional LMI systems. New hydraulic circuitry, integrated mounting hardware and the ready-mount power supply makes system installation simple. The LMI ready hydraulic system enables installation without opening the hydraulic system thus preventing contamination.

Sustainability

Thinking Generations Ahead

- Fuel efficient engine, and power saving features like constant net horsepower, help save fuel to reduce costs and lower emissions.
- Technologies like Product Link help improve overall efficiency, save fuel and fluids, and reduce equipment wear and tear.
- Longer service intervals help reduce parts and fluids consumption.
- Ecology drains make draining fluids more convenient and help prevent spills.
- Major components are built to be rebuilt, eliminating waste and saving customers money by giving the machine and/or major components a second – and even third – life.

Serviceability

More Productivity, Less Cost

Grouped service points and easy maintenance contribute to increased machine up-time for greater productivity and reduced costs.

Easy Diagnostics

The machine monitoring system provides instant feedback on the condition of operating systems, utilizing a three level warning system. The system can easily be upgraded by flashing software.

Service Access

- For ease of servicing, all regular engine maintenance points are easily reached through the left-hand engine compartment.
- Engine doors are equipped with door handles and keyed locks for better protection.
- Enlarged service panel doors provide easier access to all maintenance locations.
- Remote-mounted fuel and hydraulic filters located within easy reach.
- Optional fast fill fuel tank available.
- Hydraulic oil, pivot shaft oil and washer fluid levels are conveniently monitored using a sight gauge.
- Fuel tank fill, hydraulic oil sight gauge, fuel tank water and sediment drain and S·O·S℠ sampling ports are conveniently grouped within easy reach on the back of the machine.
- Pressure taps are grouped to allow for quick monitoring of the hydraulic system, and have ground-level access through the left service access door.

Cooling Package

Cores and fan are accessible from ground level, with grill doors that are easily removed for cleaning and maintenance. The core is also easily accessed from the back through the engine compartment. The radiator fill cap for engine coolant refill is located on top of the hood.

Ecology Drains

Ecology drains provide a convenient method for draining fluids that saves time and helps prevent spills. They are included on the radiator (coolant), hydraulic tank and engine oil change.

Safety

Designed with Protection in Mind

Job site safety is a key concern for pipeline customers, and Cat pipelayers are designed with features to help protect people in and around the machine.

- A Roll Over Protection Structure (ROPS) provides added operator protection with an open or enclosed cab.
- New winch profile and additional mirrors provide even greater visibility around the machine.
- Increased undercarriage length and repositioned rear idler enhance slope capability.
- PL83 pipelayers are Load Monitor Indicator (LMI) ready to help operators monitor loads for enhanced job site safety and efficiency.
- Grab handles help personnel maintain three points of contact while servicing.
- Updated quick drop release conveniently located near right-hand controls.

Renowned Cat Dealer Support

When Uptime Counts

Cat dealers excel at providing parts availability and equipment service to even the most remote areas. With more than 10,000 service technicians employed in over 3,000 Cat dealer locations around the world, Cat parts and service resources and capabilities are beyond compare.

– Manage costs with preventive maintenance programs like Custom Track Service, S·O·S℠ analysis, and guaranteed maintenance contracts.

– Stay productive with best-in-class parts availability.

Cat dealers can even help you with operator training to help you boost your profits.

And when it's time for machine replacement, your Cat dealer can help you save even more with Genuine Cat Reman parts. Receive the same warranty and reliability as new products at cost savings of 40 to 70 percent for power train and hydraulic components.

PL83 Specifications

Engine

Engine Model	Cat® C15 ACERT™	
Emissions	U.S. EPA Tier 3, EU Stage IIIA	
Gross Power	259 kW	347 hp
Gross Power (Metric)		352 hp
Gross Power – ISO 14396	248 kW	333 hp
Gross Power – ISO 14396 (Metric)		337 hp
Flywheel Power	231 kW	310 hp
Flywheel Power (Metric)		314 hp
Net Power – ISO 9249	231 kW	310 hp
Net Power – ISO 9249 (Metric)		314 hp
Net Power – SAE J1349	229 kW	307 hp
Net Power – SAE J1349 (Metric)		311 hp
Net Power – EU 80/1269	231 kW	310 hp
Net Power – EU 80/1269 (Metric)		314 hp
Bore	137 mm	5.4 in
Stroke	172 mm	6.75 in
Displacement	15.2 L	928 in^3

- Engine ratings at 1,850 rpm.
- Net power advertised is the power available at the flywheel when the engine is equipped with fan, air cleaner, muffler and alternator. Automatic derating occurs beyond that altitude.

Undercarriage

Shoe Type	Moderate Service	
Width of Standard Shoes	710 mm	30 in
Number of Shoes (each side)	48	
Grouser Height	78 mm	3 in
Track Gauge	2337 mm	92 in
Length of Track on Ground	3715 mm	12 ft 2 in
Ground Contact Area	5.6 m^2	8,677 in^2
Number of Rollers (each side)	9	9
Number of Carrier Rollers	1	1

- Positive pin retention track.

Hydraulic System

Implement Pump Output – Max (closed loop)	317 L/min	83.8 gal/min
Relief Valve Setting	41 600 kPa	6,033.6 psi
Counterweight (gear)	103 L/min	27.2 gal/min
Steering Pump Output (closed loop)	328 L/min	86.7 gal/min
Variable Charge Pump Output – Max (open loop)	253 L/min	66.8 gal/min

Service Capacities

Fuel Tank	409 L	108 gal
Crankcase and Filter	38 L	10 gal
Final Drive (each side)	13 L	3.4 gal
Cooling System	92 L	24.3 gal
Hydraulic Tank	101 L	26.6 gal
Power Train	190 L	50 gal

Operating Specifications

Lifting Capacity	72 575 kg	160,000 lb

Weights

Operating Weight	48 477 kg	106,807 lb
Shipping Weight	38 864 kg	85,510 lb

- Operating weight includes all shipping weights plus full fuel tank, operator, boom and counterweights installed.
- Shipping weight includes: lubricants, coolant, 10% fuel, hydraulic controls and fluids, backup alarm, seat belt, 710 mm (28 in) grouser shoes, drawbar, counterweight and boom removed.

Transmission

1 Forward	3.4 km/h	2.1 mph
2 Forward	6.1 km/h	3.8 mph
3 Forward	10.6 km/h	6.6 mph
1 Reverse	4.5 km/h	2.8 mph
2 Reverse	8 km/h	5 mph
3 Reverse	14.2 km/h	8.8 mph
1F – Drawbar Pull	618.5 N	139 lbf
2F – Drawbar Pull	338.2 N	76 lbf
3F – Drawbar Pull	186.9 N	42 lbf

Standards

Brakes	Brakes meet the standard SAE J/ISO 10265 TIC DOC 2011
ROPS	Optional ROPS (Rollover Protection Structure) meets the standards SAE J397 OCT95, SAE J1040 MAY94, ISO 3164 1995 and ISO 3471-1

Pipelaying Equipment

Planetary Hydraulic Winches		
Hook		
Drum Diameter	254 mm	10 in
Flange Diameter	508 mm	20 in
Drum Length	355.6 mm	14 in
Wire Rope Diameter	19 mm	0.75 in
Boom and Cables, 7.3 m (24 ft)	74 m	242.8 ft
Boom and Cables, 7.3 m (24 ft) Extended	74 m	242.8 ft
Boom and Cables, 8.53 m (28 ft)	86.2 m	282.8 ft
Boom and Cables, 8.53 m (28 ft) Extended	86.2 m	282.8 ft
Hook Speed (Raise) with 6 Part Line	22 m/min	72.1 ft/min
Boom		
Drum Diameter	254 mm	10 in
Flange Diameter	508 mm	20 in
Drum Length	355.6 mm	14 in
Wire Rope Diameter	19 mm	0.75 in
Boom and Cables, 7.3 m (24 ft)	55 m	180.5 ft
Boom and Cables, 7.3 m (24 ft) Extended	74 m	242.8 ft
Boom and Cables, 8.53 m (28 ft)	62.5 m	205 ft
Boom and Cables, 8.53 m (28 ft) Extended	86.2 m	282.8 ft
Removable Counterweight 13 Segments		
2 @	300 kg	662 lb
11 @	650 kg	1,430 lb
Total Weight Extendible	10 826 kg	23,817 lb

- Hydraulic Power – 540 L/min at 18 259 kPa/183 bar (143 gal/min at 2,650 psi) and 2,100 rpm pump speed independent of torque converter

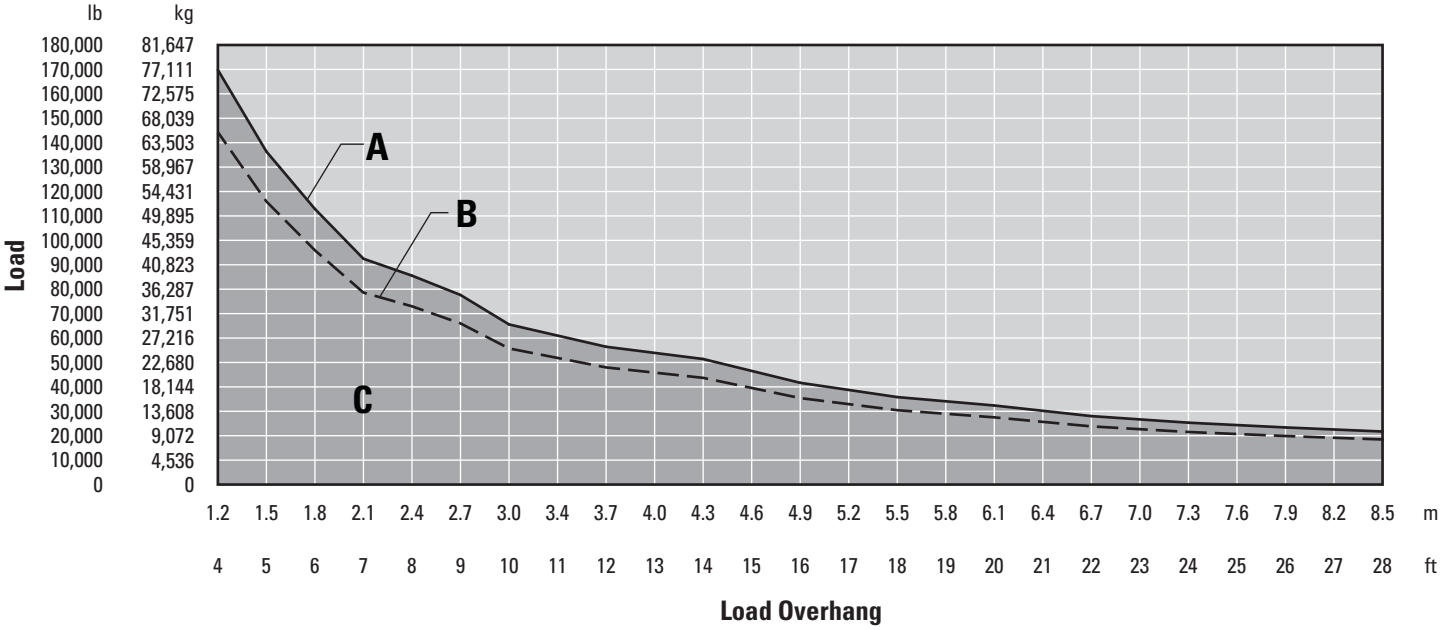

A – Lift capacity at tipping point – ISO 8813 – 72 575 kg (160,000 lb)
B – Rated load capacity – ANSI/ASME B30.14
C – Working range – ANSI/ASME B30.14

PL83 Dimensions

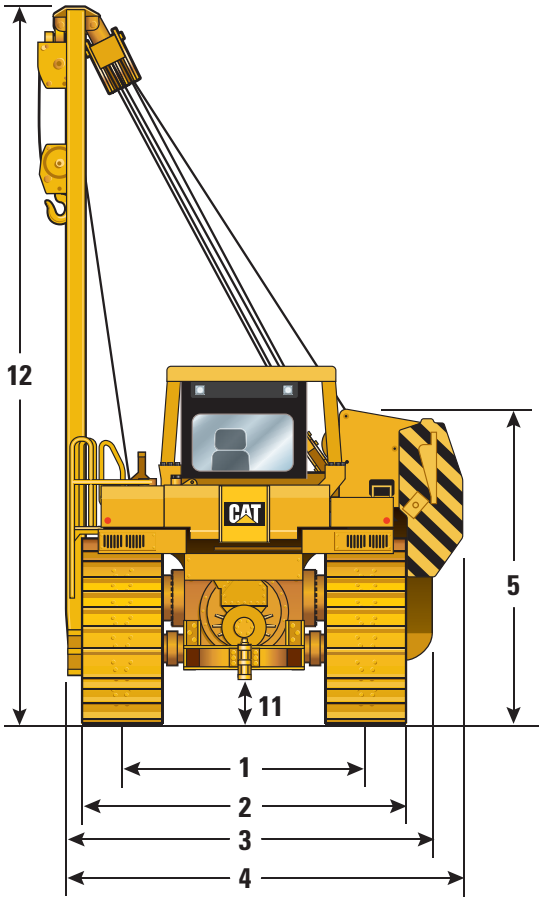

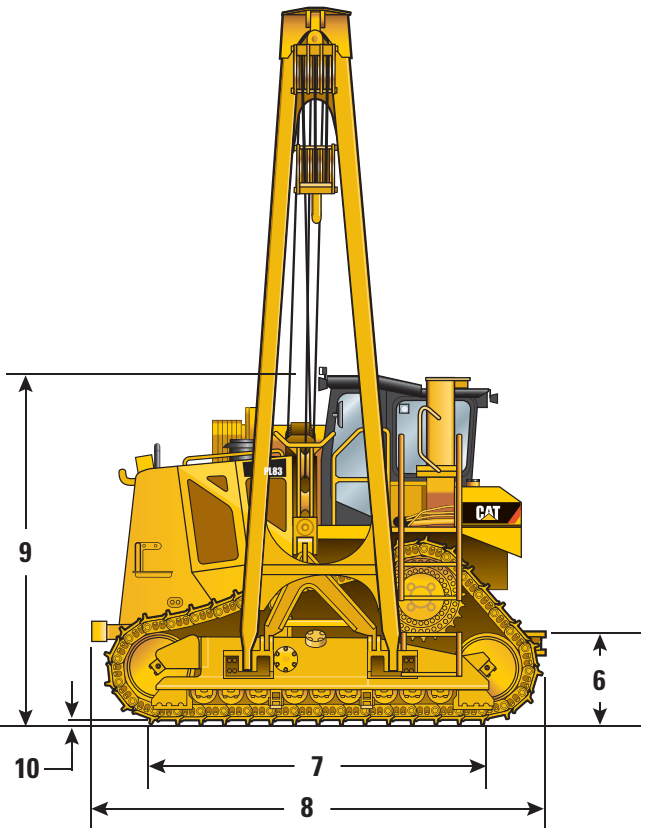

1	Track gauge	2.34 m	7 ft 8 in
2	Width of tractor (standard shoes)	3.25 m	10 ft 8 in
3	Width of tractor counterweight/boom removed	3.84 m	12 ft 7 in
4	Width of tractor (counterweight retracted)	4.09 m	13 ft 5 in
5	Machine height (tip of counterweight)	3.51 m	11 ft 6 in
6	Drawbar height	0.43 m	1 ft 5 in
7	Length of track on ground	3.72 m	12 ft 2 in
8	Operating length	5.23 m	17 ft 2 in
9	Height of machine		
	Height with ROPS and boom removed	3.15 m	11 ft 2 in
	Height to the top of the ROPS canopy/cab	3.73 m	12 ft 3 in
10	Grouser height	0.08 m	3.1 in
11	Ground clearance (per SAE J1234)	0.47 m	1 ft 7 in
12	Boom height [at SAE 1.22 m (4 ft) overhang]	8.02 m	26 ft 4 in

PL83 Standard Equipment

Standard equipment may vary. Consult your Cat dealer for details.

ELECTRICAL
- Alarm, backup
- Batteries, 4, maintenance free heavy duty
- Converter, 12V, 10 amp with 1 outlet
- Diagnostic connector
- Horn, forward warning
- Lights, 2 front, 2 rear
- Starting receptacle

OPERATOR ENVIRONMENT
- Armrest, adjustable
- Deactivation switch, hydraulic controls
- Horn
- Hour meter
- Governor switch, electronic
- Key start, single
- Monitoring system, electronic warning system with temperature gauges for coolant, power train oil and hydraulic oil
- Pedal, decelerator
- Pedals, dual brake
- Seat, vinyl suspension
- Seat belt, retractable
- Service indicator, air cleaner
- Steering control, twist tiller with touch shift, differential
- Storage compartment

PIPELAYING EQUIPMENT
- Block and hook with latch
- Counterweights, extendible segmented
- Drawworks, hydraulic actuated and controlled
- Hook with latch

POWER TRAIN
- Advanced Modular Cooling System (AMOCS)
- Aftercooler, air-to-air (ATAAC)
- C15 ACERT diesel engine with EUI (Electronic Unit Injection)
- Coolant, extended life with protection to –37° C (–34° F)
- Electric starting, 24 volt
- Fan, suction, hydraulically driven
- Filter, air with electronic service indicator
- Final drives, four planet, double reduction planetary
- Fuel priming pump, electric
- Muffler
- Parking brake, electronic
- Precleaner, stratta-tube dust ejector
- Prescreener
- Starting aid, ether
- Torque divider
- Transmission, electronically-controlled powershift, 3F-3R speeds
- Transmission control module, electronic
- Turbocharger, wastegate
- Water separator

UNDERCARRIAGE
- Carrier roller
- Frame, 9-roller tubular track roller frame
- Hydraulic track adjusters
- Master links, two piece
- Non-suspended undercarriage
- Rollers and idlers, lifetime lubricated
- Sprocket rim segments, replaceable
- Track adjusters, hydraulic
- Track guiding guards
- 760 mm (30 in) medium service grouser with sealed and lubricated track (48 section) PPR

OTHER STANDARD EQUIPMENT
- Bumper, front with towing device
- Drawbar, heavy duty
- Ecology drains – Engine oil, coolant, hydraulic oil, torque converter, fuel tank, power train case and transmission
- Enclosures, perforated engine
- Guard, hinged bottom
- Guard, hinged radiator
- Hood, perforated engine
- Hydraulics, independent steering and work tool pumps
- Hydraulic system, pilot operated for hook, boom and counterweight control
- Oil cooler, hydraulic
- Parts book, CD ROM
- Product Link ready
- S·O·S℠ sampling ports
- Steering, electronically controlled power differential
- Vandalism protection for fluid compartments

PL83 Mandatory Attachments and Optional Equipment

Mandatory attachments may vary. Consult your Cat dealer for details on available arrangements.

MANDATORY ATTACHMENTS
- FACTORY ARRANGEMENTS
  - Cab with air conditioning and 150 amp alternator
  - Cab with 95 amp alternator
  - Heater, engine coolant, 110V or 240V
  - Roll-over protection (ROPS)
  - Rollers, arctic
  - Rollers, standard

PIPELAYING EQUIPMENT
- Boom and cables, 7.3 m (24 ft)
- Boom and cables, 7.3 m (24 ft) extended
- Boom and cables, 8.53 m (28 ft)
- Boom and cables, 8.53 m (28 ft) extended

ENGINE ENCLOSURES
- Enclosure, engine, solid
- Enclosure, engine, perforated

FUEL SYSTEMS
- Tank, fuel, std
- Tank, fuel, fast fill

OPTIONAL EQUIPMENT
- POWER TRAIN
  - Drains, ecology, power train

PRODUCT LINK
- Product Link PL321, none
- Product Link PL321, Satellite
- Product Link PL321, Cellular

For more complete information on Cat products, dealer services, and industry solutions, visit us on the web at **www.cat.com**

© 2013 Caterpillar Inc.
All rights reserved

Materials and specifications are subject to change without notice. Featured machines in photos may include additional equipment. See your Cat dealer for available options.

CAT, CATERPILLAR, SAFETY.CAT.COM, their respective logos, "Caterpillar Yellow" and the "Power Edge" trade dress, as well as corporate and product identity used herein, are trademarks of Caterpillar and may not be used without permission.

AEHQ6315-02 (03-2013)
Replaces AEHQ6315-01