# 550
## Wheel Harvester

| CAT® C7 ACERT Tier III Compliant Engine | | |
|---|---|---|
| Gross Power | 147 kW | 197 HP |
| Boom Length | 8.23 m – 10.1 m | 27 ft – 33 ft |
| Operating Weight | 21,319 kg | 47,040 lb |

# Caterpillar® 550 Wheel Harvester

### Power Train
- Cat C7 ACERT Tier III
- 147 kW (197 HP)
- Side by Side Engine, Air & Hyd. Cooling
- Under Hood Exhaust System
- Under Hood Air Intake
- 24 Volt 85 Amp Alternator
- NAF Gear Drive Bogie
- Differential Lock
- Wet Disc Brakes
- Hydrostatic – Drive With Two Speed Drop Box
- Straight Axle

### Work Tools
- PD-46 Harvesting Head with Three Pillar Tower Design
- Load-sense Valves To Carrier Hyd. Pump
- 11H High Speed Bar System
- Auto Tension System
- Power Down Ability In Bail Design
- Large Pins and Bushings
- Standard “auto-seek” processing head computer cuts at operator-specified length
- Optional volume calculator / printer
- Optional PE-41, PE-42, PE-44, and PE-50 Processing heads with DASA Optimization Computers

### Leveling System
- Two Cylinder Tilt Mechanism
- 17 Degrees Forward Tilt
- 15 Degrees Side Tilt (Each Way)
- 3 Degrees Rear Tilt
- Auto Leveling
- Taper Lock Pins

### Booms
- Telescoping “V” Bottom (5-sided) Harvester Boom
- 8.23 m (27’) Reach To Tree
- Optional 10.1m (33’) reach telescoping parallel boom
- Steel Tube Hydraulic Lines
- Cylinders Protected Under Boom

**Operator Station**
- Front Entry Door
- Spacious Cab Area
- High Visibility Over Entire Work Area
- 360 Degree Lighting Package
- IQAN MDL Control System
- IQAN Full Function Graphics Display

**Hydraulics**
- 140 cc Implement Pump
- 379 L (100 gal) Hydraulic Tank
- Filtering of All Return Oil
- Electric Refill Pump
- Optional Warm Up System

**Structures**
**Upper House**
- Boom and Cab Swing Together
- Heavy Duty Boom Mount Base
- 907.19 kg (2,000 lb) Counterweight
- Load-sense Valves for Upper Functions

**Front Frame**
- NAF Gear Drive Bogie
- Differential Lock
- Wet Disc Brakes

**Rear Frame**
- Straight Axle
- Side Mounted Fuel Tanks
- Heavy Duty Engine Canopy Protection
- Large Access Doors

**Center Joint**
- Heavy Duty Center Oscillation Bearing
- 15 Degrees Oscillation Each Way
- Frame Lock Cylinder System

**Articulation**
- Cast Articulation Knuckle
- 40 Degrees Articulation Each Way
- Captured Lower Pin
- Heavy Duty Steering Cylinders
- Electronic Cushioned Steering Stops

*The 550 Wheel Harvester features engineered versatility that provides solid footing and level working conditions in extreme forestry conditions.*

# Wheel Harvester General Specifications

**Engine**
- C7 ACERT Tier III, 147 kW/197 HP @ 1800 rpm

**Fuel Tank Capacity**
- 120 gal./ 454 L

**Structural**
- Heavy duty house leveling system; 17° forward, 15° each side, 3° backwards
- Heavy duty engine house and center oscillation bearing, 15° each way
- Cast steel articulation knuckle, 40° each way

**Booms**
- Standard 27' (8.23 m) reach telescoping harvester boom
- Optional 10.1 m reach telescoping parallel boom

**Drive Train**
- Hydrostatic drive with two speed drop box (0-19 km/hr)

**Axles**
- Gear drive front bogie with differential lock and wet disc brakes
- Straight rear axle with wet disc brakes and differential locks

**Tires**
- 700 / 50 x 26.5 front tires and 28 L x 26 rear tires
- Optional bogie tracks

**Brakes**
- Service brake: hydrostatic-dynamic braking plus pedal operated front and rear wet disc brakes
- Parking brake on front bogie

**Hydraulic System**
- Pump: 140 cc implement pump; load sensing; variable displacement
- 100 gal. / 378.43 L hydraulic tank with filtering of all return oil
- Electric refill pump
- Optional Proheat warm up system

**Cab Controls**
- High visibility cab with front entry cab door; 360° lighting package
- Reverse slope windshield/Side window escape hatches
- A/C heater
- AM/FM cassette
- IQAN MDL control system with full function graphics display

**Weight**
- 47,000 lbs. / 21319 kg with attachment

# Wheel Harvester Basic Dimensions

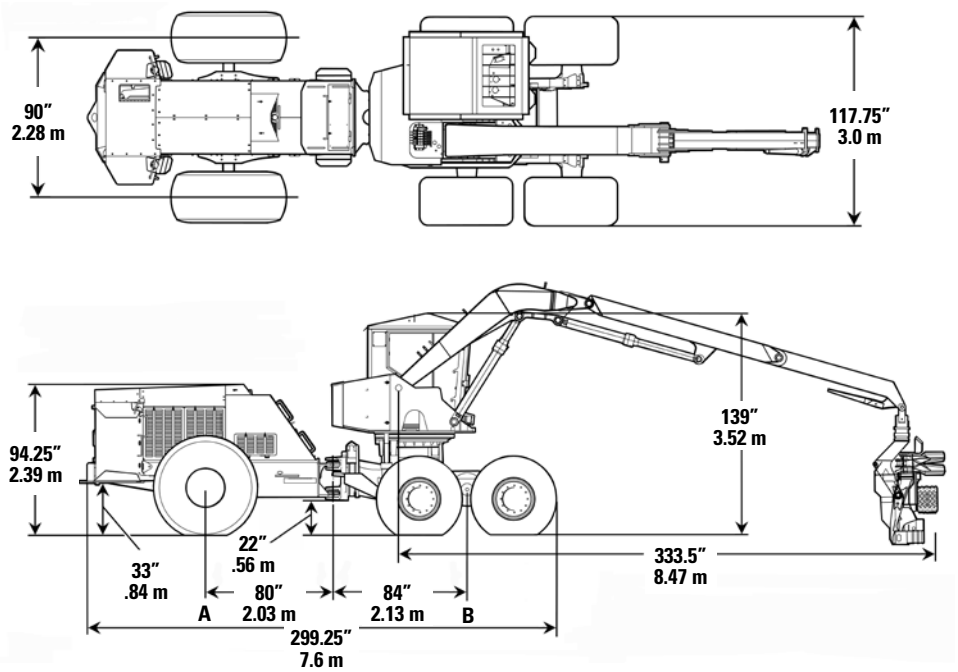


Weight: with PD-46 Head @ 10' Radius

Point A (Rear axle):
15,120 lb
6 858.3 kg

Point B (Front axle):
31,920 lb
14 479 kg

Total: with 180 Head installed
47,040 lb
21 319 kg

Turning Radius without differential lock:
38' 8"
11.785 m

Turning Radius with differential lock:
44' 2"
13.462 m

Cat, CATERPILLAR their respective logos ACERT and "Caterpillar Yellow", as well as corporate and product identity used herein, are trademarks of Caterpillar and may not be used without permission.

For more complete information on CAT products, dealer services, and industry solutions, visit us on the web at: www.cat.com and www.forestpro.com

©2006
All Rights Reserved
Printed in the USA
Order Form # CATWH(01-07)

Materials and specifications are subject to change without notice. Featured machines in photos may include additional equipment. See your Caterpillar dealer for available options.