Cat®
246D

Skid Steer Loader

Features:

The Cat® 246D Skid Steer Loader, with its radial lift design, delivers impressive mid-lift reach and excellent digging performance with outstanding drawbar power. The 246D features the following:

- **Industry leading sealed and pressurized cab option** provides a cleaner and quieter operating environment with excellent work tool visibility.
- **Available high-back, heated, air ride seat with seat mounted adjustable joystick controls** makes the D Series the industry leader in operator comfort.
- **High performance power train** provides maximum performance and production capability through the Electronic Torque Management system, optional two speed travel and an electronic hand/foot throttle with decel pedal capability.
- **High Flow XPS hydraulic system** is available for applications that demand maximum hydraulic work tool performance.
- **Electronically controlled Cat C3.3B engine** provides high horsepower and torque while meeting U.S. EPA Tier 4 Final (EU Stage IIIB) emission standards.
- **Cat "Intelligent Leveling" system (ILEV)** provides industry leading technology, integration and optional features such as dual direction self level, work tool return to dig and work tool positioner.
- **Speed Sensitive Ride Control option** improves operation on rough terrain, enabling better load retention, increased productivity and greater operator comfort.
- **Maximize machine capability and control** with optional Advanced Display providing on-screen adjustments for implement response, hystat response and creep control. Also features multi-language functionality with customizable layouts, security system and rearview camera.
- **Ground level access** to all daily service and routine maintenance points helps reduce machine downtime for greater productivity.
- **Broad range of performance matched Cat Work Tools** make the Cat Skid Steer Loader the most versatile machine on the job site.

Specifications

Engine

Engine Model	Cat C3.3B DIT (turbo)	
Gross Power SAE J1995	55.4 kW	74.3 hp
Net Power SAE 1349	54.4 kW	72.9 hp
Net Power ISO 9249	54.9 kW	73.7 hp
Peak Torque at 1,500 rpm SAE J1995	265 N·m	195 lbf-ft
Displacement	3.3 L	203 in^3
Stroke	120 mm	4.7 in
Bore	94 mm	3.7 in

Weights*

Operating Weight	3368 kg	7,424 lb

Power Train

Travel Speed (Forward or Reverse):		
One Speed	12.5 km/h	7.7 mph
Two Speed Option	17.7 km/h	11.0 mph

Operating Specifications*

Rated Operating Capacity	975 kg	2,150 lb
Rated Operating Capacity with Optional Counterweight	1088 kg	2,400 lb
Tipping Load	1950 kg	4,300 lb
Breakout Force, Tilt Cylinder	3336 kg	7,355 lb

Hydraulic System

Hydraulic Flow – Standard:		
Loader Hydraulic Pressure	23 000 kPa	3,335 psi
Loader Hydraulic Flow	86 L/min	23 gal/min
Hydraulic Power (calculated)	33 kW	44 hp
Hydraulic Flow – High Flow XPS:		
Maximum Loader Hydraulic Pressure	28 000 kPa	4,061 psi
Maximum Loader Hydraulic Flow	121 L/min	32 gal/min
Hydraulic Power (calculated)	57 kW	76 hp

Cab

ROPS	ISO 3471:2008
FOPS	ISO 3449:2005 Level I
FOPS Level II	ISO 3449:2005 Level II

Service Refill Capacities

Chain Box, each side	12.7 L	3.3 gal
Cooling System	14 L	3.7 gal
Engine Crankcase	11 L	3.0 gal
Fuel Tank	94 L	24.8 gal
Hydraulic System	52 L	13.7 gal
Hydraulic Tank	39 L	10.3 gal

246D Skid Steer Loader

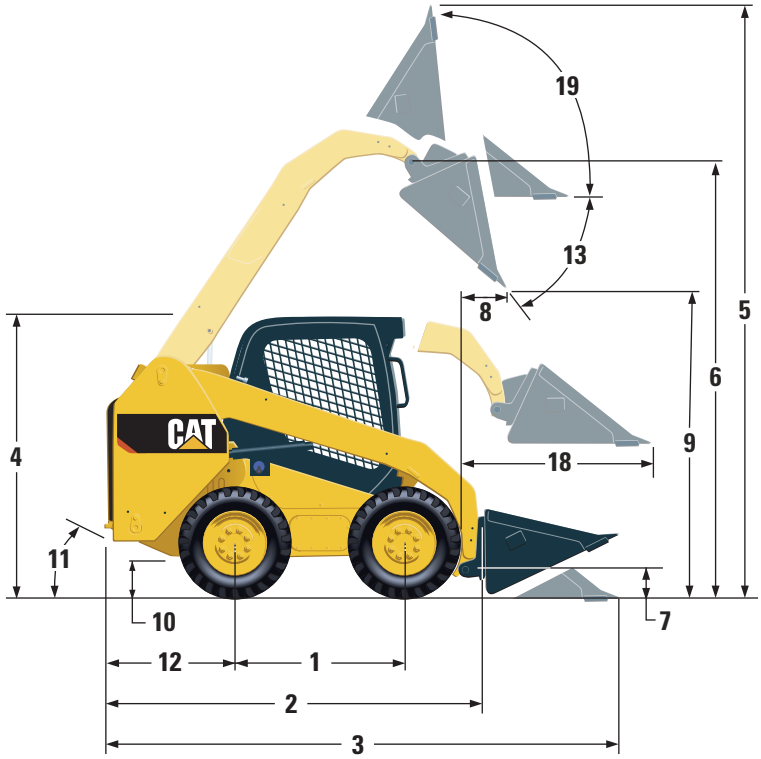

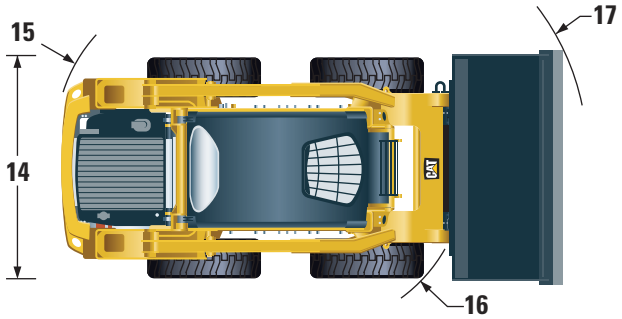

Dimensions*

1	Wheelbase	1249 mm	49.2 in
2	Length without Bucket	2993 mm	117.8 in
3	Length with Bucket on Ground	3708 mm	146.0 in
4	Height to Top of Cab	2110 mm	83.1 in
5	Maximum Overall Height	4032 mm	158.7 in
6	Bucket Pin Height at Maximum Lift	3154 mm	124.2 in
7	Bucket Pin Height at Carry Position	200 mm	7.9 in
8	Reach at Maximum Lift and Dump	600 mm	23.6 in
9	Clearance at Maximum Lift and Dump	2465 mm	97.1 in
10	Ground Clearance	226 mm	8.9 in
11	Departure Angle	26°	
12	Bumper Overhang behind Rear Axle	1083 mm	42.6 in
13	Maximum Dump Angle	39°	
14	Vehicle Width over Tires	1676 mm	66 in
15	Turning Radius from Center – Machine Rear	1806 mm	71.2 in
16	Turning Radius from Center – Coupler	1401 mm	55.2 in
17	Turning Radius from Center – Bucket	2181 mm	85.9 in
18	Maximum Reach with Arms Parallel to Ground	1388 mm	54.6 in
19	Rack Back Angle at Maximum Height	96°	

*Operating Weight, Operating Specifications and Dimensions all based on 75 kg (165 lb) operator, all fluids, one speed, OROPS, 1676 mm (66 in) dirt bucket, Cat PC 12 × 16.5 tires, standard flow hydraulics, mechanical suspension seat, no optional counterweights and manual quick coupler (unless otherwise noted).

MANDATORY EQUIPMENT

- Hydraulics, Standard or High Flow XPS
- Quick Coupler, Mechanical or Electric
- Seat Belt, 50 mm (2 in) or 75 mm (3 in)
- Power Train: One Speed, One Speed with Speed Sensitive Ride Control, Two Speed or Two Speed with Speed Sensitive Ride Control

PERFORMANCE PACKAGES

- Performance Package H1: *Standard Flow Hydraulics (No Self Level)*
- Performance Package H2: *Standard Flow Hydraulics, Dual Direction Electronic Self Level (Raise and Lower), Electronic Snubbing (Raise and Lower)*
- Performance Package H3: *High Flow XPS, Dual Direction Electronic Self Level (Raise and Lower), Electronic Snubbing (Raise and Lower)*

COMFORT PACKAGES

- Open ROPS (C0): *Static Seat (No Foot Throttle, Headliner, Heater or Door)*
- Open ROPS (C1): *Foot Throttle, Headliner, Cup Holder, and choice of Seat (Mechanical Suspension or High Back, Heated, Air Ride Seat) (No Heater or Door)*
- Enclosed ROPS with Heater (C2): *Foot Throttle, Headliner, Heater and Defroster, Side Windows, Cup Holder, Radio Ready, choice of Seat (Mechanical Suspension or High Back, Heated, Air Ride Seat) and Door (Glass or Polycarbonate)*
- Enclosed ROPS with A/C (C3): *C2 + Air Conditioner*

STANDARD EQUIPMENT

ELECTRICAL

- 12 volt Electrical System
- 80 ampere Alternator
- Ignition Key Start/Stop Switch
- Lights: *Gauge Backlighting, Two Rear Tail Lights, Two Rear Halogen Working Lights, Two Adjustable Front Halogen Lights, Dome Light*
- Backup Alarm
- Heavy Duty Battery, 880 CCA

OPERATOR ENVIRONMENT

- Gauges: *Fuel Level, Hour Meter*
- Operator Warning System Indicators: *Air Filter Restriction, Alternator Output, Armrest Raised/Operator Out of Seat, Engine Coolant Temperature, Engine Oil Pressure, Glow Plug Activation, Hydraulic Filter Restriction, Hydraulic Oil Temperature, Park Brake Engaged, Engine Emission System*
- Adjustable Vinyl Seat
- Fold In Ergonomic Contoured Armrest
- Control Interlock System, when operator leaves seat or armrest raised: *Hydraulic System Disables, Hydrostatic Transmission Disables, Parking Brake Engages*
- ROPS Cab, Open, Tilt Up
- FOPS, Level I
- Top and Rear Windows
- Floor Mat
- Interior Rearview Mirror
- 12 volt Electric Socket
- Horn
- Hand (Dial) Throttle, Electronic
- Adjustable Joystick Controls
- Anti-theft Security System with 6-button Keypad
- Storage Compartment with Netting

POWER TRAIN

- Cat C3.3B, Turbo Diesel Engine, Meeting U.S. EPA Tier 4 Final (EU Stage IIIB) Emission Standards
- Air Cleaner, Dual Element, Radial Seal
- S·O·S℠ Sampling Valve, Hydraulic Oil
- Filters, Cartridge-type, Hydraulic
- Filters, Cartridge-type, Fuel and Water Separator
- Radiator/Hydraulic Oil Cooler (side-by-side)
- Spring Applied, Hydraulically Released Parking Brakes
- Hydrostatic Transmission
- Four Wheel Chain Drive

OTHER

- Engine Enclosure, Lockable
- Extended Life Antifreeze, –36° C (–33° F)
- Machine Tie Down Points (6)
- Support, Lift Arm
- Hydraulic Oil Level Sight Gauge
- Radiator Coolant Level Sight Gauge
- Radiator, Expansion Bottle
- Cat ToughGuard™ Hose
- Auxiliary, Hydraulics, Continuous Flow
- Heavy Duty, Flat Faced Quick Disconnects with Integrated Pressure Release
- Split D-Ring to Route Work Tool Hoses Along Side of Left Lift Arm
- Electrical Outlet, Beacon
- Belly Pan Cleanout
- Variable Speed Demand Fan

OPTIONAL EQUIPMENT

- Hand-Foot Style Controls
- External Counterweights
- Beacon, Rotating
- Engine Block Heater – 120V
- Oil, Hydraulic, Cold Operation
- Paint, Custom
- Heavy Duty Battery, 1,000 CCA
- Product Link™, Cellular
- Advanced Display: Full Color, 5 in LCD screen, Advanced Multi-operator Security System, On-screen Adjustments for Implement Response, Hystat Response, and Creep Control; Rearview Camera Ready
- Advanced Display: Rearview Camera Included
- Work Tool Return to Dig and Work Tool Positioner
- Bluetooth Radio with Microphone (AM/FM/Weather Band Receiver with USB and Auxiliary Input Jack)

For more complete information on Cat products, dealer services, and industry solutions, visit us on the web at **www.cat.com**

© 2016 Caterpillar
All rights reserved

Materials and specifications are subject to change without notice. Featured machines in photos may include additional equipment. See your Cat dealer for available options.

CAT, CATERPILLAR, SAFETY.CAT.COM, their respective logos, “Caterpillar Yellow” and the “Power Edge” trade dress, as well as corporate and product identity used herein, are trademarks of Caterpillar and may not be used without permission.

AEHQ7018-03 (04-2016)
Replaces AEHQ7018-02
(NACD, EU)