Perkins Sabre 4.4TGM Marine Diesel Engine
For genset and constant speed applications.

CATERPILLAR MARINE POWER UK LTD
Wimborne, Dorset, England.
Tel. +44(0)1202 893720
Fax. +44(0)1202 851700
E-mail. Wimborne_MPC_post@cat.com
www.Perkins-Sabre.com

Total dry weight = 478 kg

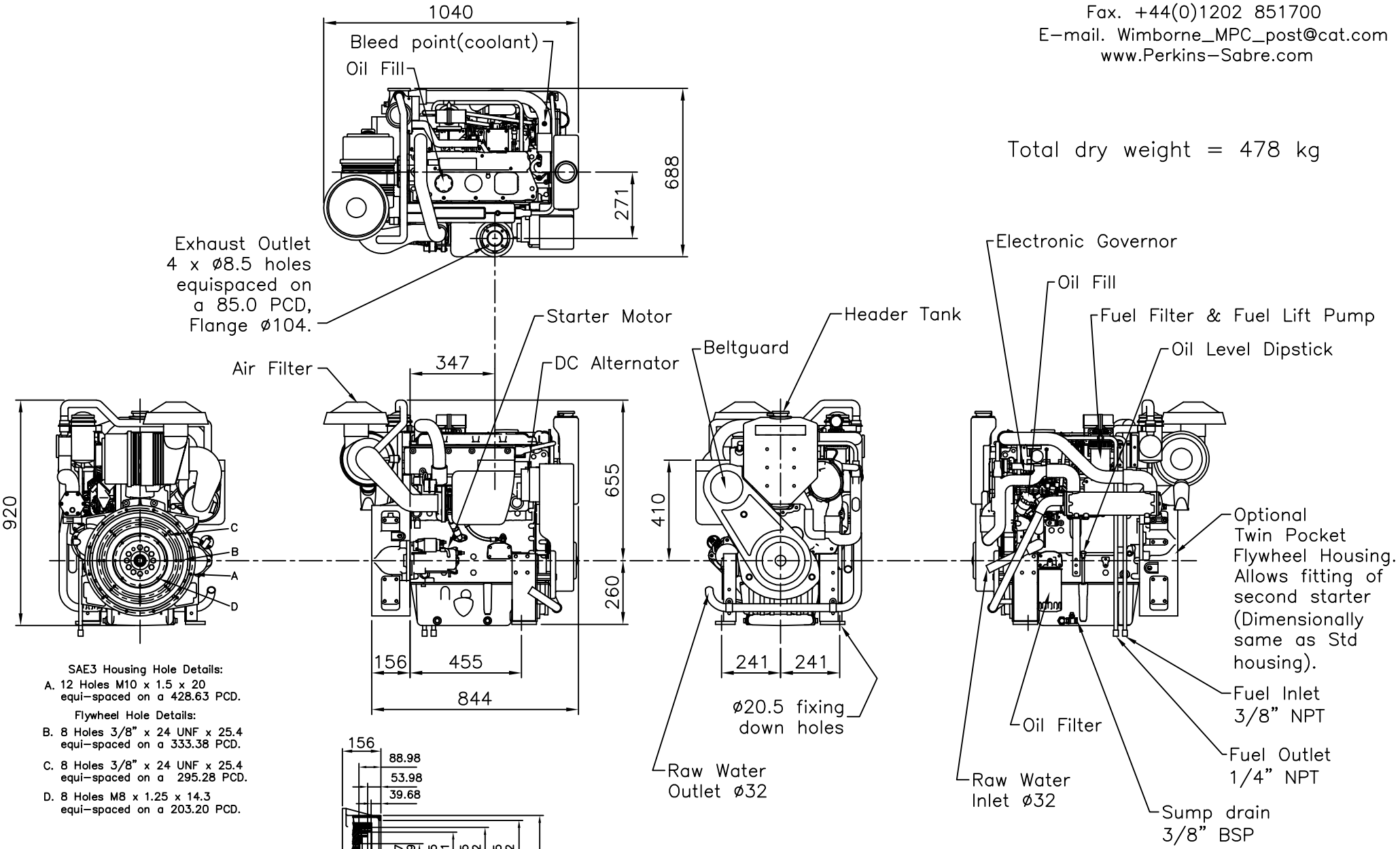

SAE3 Housing Hole Details:

A. 12 Holes M10 x 1.5 x 20 equi-spaced on a 428.63 PCD.

Flywheel Hole Details:

B. 8 Holes 3/8" x 24 UNF x 25.4 equi-spaced on a 333.38 PCD.

C. 8 Holes 3/8" x 24 UNF x 25.4 equi-spaced on a 295.28 PCD.

D. 8 Holes M8 x 1.25 x 14.3 equi-spaced on a 203.20 PCD.

Section through SAE3 housing and flywheel

Rev 2 – Sump drain added – GM – 9.10.06

Doc 7403-2-06