ALLIED™ Commercial

PACKAGED HEAT PUMP

KHA

K-Series™ Rooftop Units

50 HZ

Bulletin No. KHA-180-240-50hz (04/2019)

PRODUCT SPECIFICATIONS

52.8 and 70.3 kW (15 and 20 Tons)

Net Cooling Capacity – 44.2 to 55.4 kW (151 000 to 189 000 Btuh)

Net Heating Capacity – 46.6 to 57.1 kW (159 000 to 196 000 Btuh)

Optional Electric Heat - 11.5 to 68.9 kW

MODEL NUMBER IDENTIFICATION

K H A 240 S 4 B N 1 M

- **Brand/Family** — K = K Series™
- **Unit Type** — H = Packaged Heat Pump
- **Major Design Sequence** — A = 1st Generation
- **Nominal Cooling Capacity - kW** — 180 = 52.8 kW; 240 = 70.3 kW
- **Cooling Efficiency** — S = Standard Efficiency
- **Refrigerant Type** — 4 = R-410A
- **Blower Type** — B = Belt Drive
- **Factory Installed Electric Heat** — N = No Heat
- **Minor Design Sequence** — 1 = 1st Revision; 2 = 2nd Revision; 3 = 3rd Revision
- **Voltage** — M = 380/420V-3 phase-50hz

FEATURES AND BENEFITS

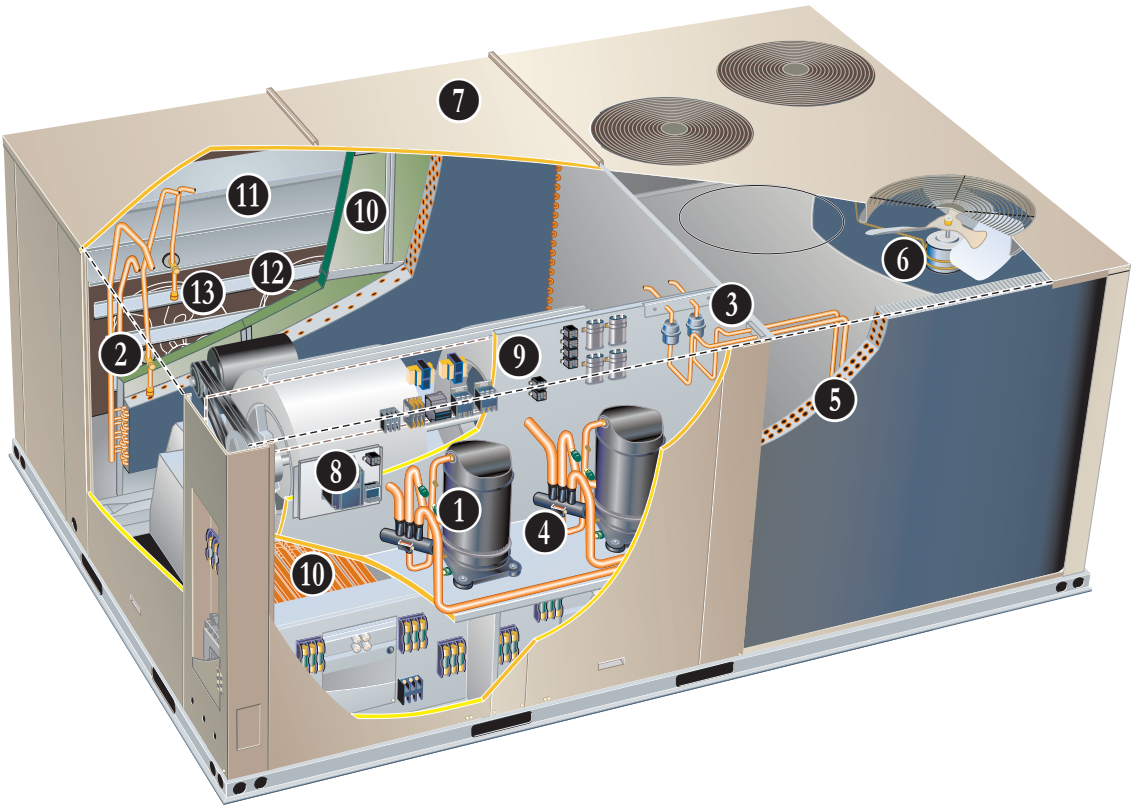

K-Series™ rooftop units from Allied are the new standard for reliable, efficient rooftop units built for long-lasting performance that can significantly improve indoor environments. K-Series™ rooftop units feature:

- **R-410A Refrigerant** - Environmentally friendly.
- **Scroll Compressors -** Single speed scroll compressors are furnished on all models.
- **Crankcase Heaters -** Protect compressors from refrigerant liquid migration in the off cycle improving product reliability.
- **High Pressure Switches -** Protect compressor.
- **Isolated Compressor Compartment -** Allows performance check during normal compressor operation without disrupting airflow.
- **Independent Outdoor Fan Motor Mounts -** Allows for easy and efficient service access without removing the top panel.
- **Downflow Airflow -** Horizontal airflow with optional horizontal curb.
- **Two Fork Lift Slots on Three Sides -** Easy to pick up and transport units from almost any angle.
- **Corrosion-Resistant Removable, Drain Pan -** Provides application flexibility, durability and improved serviceability.
- **Thermostatic Check/Expansion Valves -** Provide peak cooling performance across the entire application range.
- **MERV 8 or MERV 13 Filters -** Available as field installed option, provide an enhanced level of indoor air quality, and can help the building qualify for additional Leadership in Energy and Environmental Design (LEED) credits.
- **Common Components -** Many maintenance items are standard throughout the entire product line, reducing the need to carry different parts to the job or maintain in inventory.

CONTENTS

PERFORMANCE/QUALITY

Components bonded for grounding to meet safety standards for servicing required by Underwriters Laboratories (UL) and the International Electrotechnical Commission (IEC).

Cooling performance is rated at test conditions included in Air-Conditioning, Heating and Refrigeration (AHRI) Standard 340/360 while operating at rated voltage and air volumes.

International Organization for Standardization (ISO) 9001 Registered Manufacturing Quality System.

CE MARK OPTION

The CE mark has been added to our rooftop product line as a configure to order (CTO) option. This optional construction allows units to be sold into countries requiring CE marking for rooftop products.

CE marked units meet the requirements of the Machinery Directive 2006/42/EC, Low Voltage Directive 73/23/EEC, EMC Directive 89/336/EEC, and Gas Directive 90/396/EEC. Declaration of conformity certificates will be provided for each CE marked unit on demand.

Key features of this option over and above standard product features are:

- Touch-proof electrical components meeting the requirements of EN 60529.
- Branch circuits over 0.5 kW load have overcurrent protection.
- Rotary style/finger safe disconnect switch with locking handle prevents disconnect door from being opened with the power on. Padlock can be applied to lock the disconnect switch in the OFF position.
- The factory wiring has been redesigned for separation of high and low voltage circuits.

COOLING / HEATING SYSTEM

Designed to maximize sensible and latent cooling performance at design conditions.

System can operate in the cooling mode from –1°C to 52°C without any additional controls.

R-410A Refrigerant
Non-chlorine based, ozone friendly, R-410A.

1 Scroll Compressors
Scroll compressors on all models for high performance, reliability and quiet operation.

Resiliently mounted on rubber grommets for quiet operation.

Compressor Crankcase Heaters
Protects against refrigerant migration that can occur during low ambient operation.

2 Check/Thermal Expansion Valves
Assures optimal performance throughout the application range.

Removable element head.

3 Filter/Driers
High capacity bi-flow filter/drier protects the system from dirt and moisture.

High Pressure Switches
Protects the compressor from overload conditions such as dirty condenser coils, blocked refrigerant flow, or loss of outdoor fan operation.

Defrost Control
Provides a defrost cycle, if needed, every 30 or 60 or 90 minutes (adjustable) of compressor “on” time at outdoor coil temperature below 2°C.

Pressure switch mounted on outdoor coil vapor line terminates defrost cycle.

4 Reversing Valves
4-way interchange reversing valve effects a rapid change in direction of refrigerant flow resulting in quick changeover from cooling to heating and vice versa.

COOLING / HEATING SYSTEM continued)

Freezestats
Protects the indoor coil from damaging ice build-up due to conditions such as low/no airflow, or low refrigerant charge.

5 Coil Construction
Copper tube construction, enhanced rippled-edge aluminum fins, flared shoulder tubing connections, silver soldered construction for improved heat transfer. Factory leak tested.

Indoor Coil
Cross row circuiting with rifled copper tubing optimizes both sensible and latent cooling capacity.

Outdoor Coil
Two independent formed coils allows separation for cleaning.

Condensate Drain Pan
Plastic pan, sloped to meet drainage requirements of ASHRAE 62.1.

Side or bottom drain connections.

6 Outdoor Coil Fan Motors
Thermal overload protected, totally enclosed, permanently lubricated ball bearings, shaft up, wire basket mount.

Outdoor Coil Fans
Polyvinyl Chloride (PVC) coated fan guard furnished.

Required Selections

Cooling Capacity
Specify nominal cooling capacity of the unit

Options/Accessories

Field Installed

Condensate Drain Trap
Available in copper or Polyvinyl Chloride (PVC).

Drain Pan Overflow Switch
Monitors condensate level in drain pan, shuts down unit if drain becomes clogged.

Low Ambient Kit
Cycles the outdoor fan while allowing compressor operation in the cooling cycle. This intermittent fan operation allows the system to operate without icing the indoor coil and losing capacity. Designed for use in ambient temperatures no lower than –17°C.

CABINET

7 Construction
Heavy-gauge steel panels and full perimeter heavy-gauge galvanized steel base rail provides structural integrity for transportation, handling, and installation.

Base rails have rigging holes.

Three sides of the base rail have forklift slots.

Raised edges around duct and power entry openings in the bottom of the unit provide additional protection against water entering the building.

Airflow Choice
Units are available in downflow (vertical) or horizontal return air flow configuration.

Horizontal air flow requires Horizontal Roof Curb.

Horizontal Return Air Panel Kit is also required if converting a downflow configured unit to horizontal air flow.

Power Entry
Electrical lines can be brought through the unit base or through horizontal access knock-outs

Exterior Panels
Constructed of heavy-gauge, galvanized steel with a two-layer enamel paint finish.

Insulation
All panels adjacent to conditioned air are fully insulated with non-hygroscopic fiberglass insulation.

Unit base is fully insulated. The insulation also serves as an air seal to the roof curb, eliminating the need to add a seal during installation.

Access Panels
Access panels are provided for the economizer/filter section, heating/blower section, and the compressor/controls section.

Options/Accessories

Factory Installed

Corrosion Protection
A completely flexible immersed coating with an electrodeposited dry film process. (AST ElectroFin E-Coat) Meets Mil Spec MIL-P-53084, ASTM B117 Standard Method Salt Spray Testing.

Indoor Corrosion Protection:

- Coated coil
- Painted blower housing
- Painted indoor base

Outdoor Corrosion Protection:

- Coated coil
- Painted outdoor base

Hinged Access Panels
Hinged access panels for the filter section, the blower section and compressor/controls section.

All hinged panels have seals and quarter-turn latching handles to provide a tight air and water seal.

Field Installed

Combination Coil/Hail Guards
Heavy gauge steel frame painted to match cabinet with expanded metal mesh to protect the outdoor coil from damage.

Horizontal Return Air Panel Kit
Required for horizontal applications with Horizontal Roof Curb, contains panel with return air opening for field replacement of existing unit panel and panel to cover bottom return air opening in unit, see dimension drawings.

8 BLOWER

A wide selection of supply air blower options are available to meet a variety of airflow requirements.

Motor
Overload protected, equipped with ball bearings. Belt drive motors are offered on all models and are available in several different sizes to maximize air performance.

Supply Air Blower
Forward curved blades, double inlet, blower wheel is statically and dynamically balanced. Equipped with ball bearings and adjustable pulley (allows speed change).

Blower assembly slides out of unit for servicing.

Required Selections

Order blower motor horsepower and drive kit number required when base unit is ordered, see Drive Kit Specifications Table.

CONTROLS

9 Unit Control
All control voltage is provided via a 24V (secondary) transformer with built-in circuit breaker protection.

Heat/Cool Staging - Capable of up to 2 heat / 2 cool staging with a third party DDC control system or thermostat.

Low Voltage Terminal Block - Provides screw terminal connections for thermostat or controller wiring.

Night Setback Mode - Saves energy by closing outdoor air dampers and operating supply fan on thermostat demand only.

Options/Accessories

Field Installed

Smoke Detector
Photoelectric type, installed in supply air section, return air section or both sections. Available with power board and single sensor (supply or return) or power board and two sensors (supply and return). Power board located in unit control compartment.

Commercial Control Systems

Thermostats
Control system and thermostat options see page 20.

ELECTRICAL

All units include terminal block and fuse block in power entry junction box for single power entry application.

Required Selections

Voltage Choice
Specify when ordering base unit.

Options/Accessories

Field Installed

10 Electric Heat
Electric heat is CE marked.

Helix wound nichrome elements, individual element limit controls, wiring harness. Unit fuse block is furnished as standard. See Options / Accessories tables for ordering information.

INDOOR AIR QUALITY

11 Air Filters
Disposable 51 mm filters furnished as standard.

Options/Accessories

Field Installed

High Efficiency Air Filters
Disposable MERV 8 or MERV 13 (Minimum Efficiency Reporting Value based on ASHRAE 52.2) efficiency 51 mm pleated filters.

UVC Germicidal Lamps

Germicidal lamps emit ultra-violet (UV-C) energy, which has been proven to be effective in reducing microbes such as viruses, bacteria, yeasts, and molds. This process either destroys the organism or controls its ability to reproduce.

UV-C energy greatly reduces the growth and proliferation of mold and other bioaerosols (bacteria and viruses) on illuminated surfaces (particularly coil and drain pan).

Lamps are field installed in the blower/evaporator coil section.

All necessary hardware for installation is included.

Lamps operate on 220V single-phase power supply. Step-down transformer may be ordered separately for 380/420V primary to 220V secondary units. Alternately, 220V power supply may be used to directly power the UVC ballast(s).

Indoor Air Quality (CO_2) Sensors
Monitors CO_2 levels, reports to the Unit Controller which adjusts economizer dampers as needed.

12 ECONOMIZER OPTIONS

Factory or Field Installed

Economizer (Standard and High Performance Common Features)
Outdoor Air Hood with mist elimination filter is furnished.

Mixed Air Sensor is furnished for field installation in the rooftop unit. Sensor is factory installed when Economizers are factory installed.

Standard Economizer Features
Gear-driven action, return air and outdoor air dampers, plug-in connections to unit, nylon bearings, neoprene seals, 24-volt, fully-modulating spring return motor.

Standard Economizer Control Module
The Standard Economizer Control Module can be adjusted to operate based on outdoor air temperatures.

Economizer Controls:

- Damper Minimum Position - Can be set lower than traditional minimum air requirements resulting in cost savings.
- IAQ Sensor - Signals dampers to modulate and maintain 13°C when CO_2 is higher than the CO_2 setpoint.
- Demand Control Ventilation (DCV) LED - A steady green Demand Control Ventilation LED indicates the IAQ reading is higher than setpoint and requires more fresh air.
- Free Cool LED - A steady green LED indicates outdoor air is suitable for free cooling.

Free Cooling runs when outdoor air temperature is lower than the set temperature on the economizer control.

NOTE: The Free Cooling default setting for outdoor air temperature sensor is 13°C

High Performance Economizer Features
Gear-driven action, high torque 24-volt fully-modulating spring return damper motor, return air and outdoor air dampers, plug-in connections to unit, stainless steel bearings, enhanced neoprene blade edge seals and flexible stainless steel jamb seals to minimize air leakage.

High Performance Economizer Control Module
Module provides inputs and outputs to control economizer based on parameter settings. Module automatically detects sensors by polling to determine which sensors are installed in system.

Module displays any alarm messages (fault detection and diagnostics) as an aid in troubleshooting.

Non-volatile memory retains parameter settings in case of power failure.

Keypad with four navigation buttons and LCD screen is furnished for setting economizer parameters.

- Menu Up/Exit button returns to the main menu.
- Arrow Up ▲ button moves to the previous or next parameter within the selected menu.
- Arrow Down ▼ button moves to the next parameter within the selected menu.
- Select (enter) ↵ button confirms parameter selection.

Main Menu Structure:

- STATUS (economizer and system operation status)
- SETPOINTS (settings for various setpoint parameters)
- SYSTEM SETUP (settings/ information about the system)
- ADVANCED SETUP (freeze protection, CO_2 settings, stage 3 delay and additional calibration settings)
- CHECKOUT (damper positions)
- ALARMS (output signal that can be configured for remote alarm monitoring)

Refer to Installation Instructions for complete setup information and menu parameters available.

Factory or Field Installed

Single Enthalpy Temperature Control
Enthalpy sensor enables the economizer when the outdoor air enthalpy is below the configured setpoint.

Field Installed

Differential Enthalpy Control
Order two Single Enthalpy Control Kits. One is field installed in the return air section, the other in the outdoor air section. Allows the economizer control board to select between outdoor air or return air, whichever has lower enthalpy.

EXHAUST OPTIONS

Factory or Field Installed

13 Downflow Barometric Relief Dampers With Exhaust Hood
Allow relief of excess air.

Aluminum blade dampers prevent blow back and outdoor air infiltration during off cycle.

Exhaust hood with bird screen is furnished.

Field Installed

Horizontal Barometric Relief Dampers With Exhaust Hood
For use when unit is configured for horizontal applications requiring an economizer.

Allows relief of excess air.

Aluminum blade dampers prevent blow back and outdoor air infiltration during off cycle.

Field installed in return air duct.

Exhaust hood with bird screen is furnished.

14 Power Exhaust Fan
Installs internal to unit for downflow applications only with economizer option. Provides exhaust air pressure relief. Interlocked to run when supply air blower is operating, fan runs when outdoor air dampers are 50% open (adjustable), motor is overload protected. Requires Economizer with Outdoor Air Hood and Downflow Barometric Relief Dampers. Dual fans are 508 mm diameter with 5 blades with (2) 0.25 kW motors.

OUTDOOR AIR OPTIONS

Factory or Field Installed

Outdoor Air Damper - Downflow or Horizontal With Air Hood
Linked mechanical dampers, 0 to 25% (fixed) outdoor air adjustable, installs in unit. Includes outdoor air hood.

Automatic model features fully modulating spring return damper motor with plug-in connection.

Manual model features parallel blade, gear-driven dampers with adjustable fixed position.

Outdoor Air Hood is included when damper is factory installed and is furnished with damper when ordered for field installation.

ROOF CURBS

Nailer strip furnished, mates to unit, US National Roofing Contractors Approved, shipped knocked down.

Downflow

Hybrid Roof Curb
Roof curb can be assembled using interlocking tabs to fasten corners together. No tools required.

Curb can also be fastened together with furnished hardware.

Available in 203, 356, 457, and 610 mm heights.

Adjustable Pitch Curb
Fully adjustable pitch curb provides a level platform for rooftop units allowing flexible installations on roofs with uneven or sloped angles.

Maximum slope is 19 mm per 300 mm in any direction.

Uses interlocking tabs to fasten corners together. No tools required.

Hardware is furnished to connect upper curb with lower curb.

Available in 356 mm height.

Adaptor Curbs (not shown)
Curbs are regionally sourced. Dimensions will vary based upon the source. Contact your local sales representative for a detailed cut sheet with applicable dimensions.

Horizontal

Converts unit from downflow to horizontal (side) air flow, return air is on unit, supply air is on curb, see dimension drawings. Curbs for rooftop applications meet National Roofing Code requirements. Requires Horizontal Return Air Panel Kit. Available in 660 and 940 mm heights. Optional Insulation Kit is available to help prevent sweating.

CEILING DIFFUSERS

Ceiling Diffusers (Flush or Step-Down)
Aluminum grilles, large center grille, insulated diffuser box with flanges, hanging rings furnished, interior transition (even air flow), internally sealed (prevents recirculation), adapts to T-bar ceiling grids or plaster ceilings.

Transitions (Supply and Return)
Used with diffusers, installs in roof curb, galvanized steel construction, flanges furnished for duct connection to diffusers, fully insulated.

OPTIONS / ACCESSORIES

Item Description	Model Number	Catalog Number	Unit Size 180	Unit Size 240
CE MARK				
CE Marked Unit		Factory	O	O
COOLING SYSTEM				
Condensate Drain Trap	Polyvinyl Chloride (PVC) - C1TRAP20AD2	**76W26**	X	X
	Copper - C1TRAP10AD2	**76W27**	X	X
Corrosion Protection		Factory	O	O
Drain Pan Overflow Switch	C1SNSR71FF1-	**10C24**	X	X
Efficiency		Standard	O	O
Low Ambient Kit	K1SNSR33CS1	**55W73**	X	X
Refrigerant Type		R-410A	O	O
BLOWER - SUPPLY AIR				
Motors	Belt Drive - 2.2 kW	Factory	O	
	Belt Drive - 3.7 kW	Factory	O	O
	Belt Drive - 5.6 kW	Factory	O	O
	Belt Drive - 7.5 kW	Factory		O
Drive Kits	Kit #3 571-721 rev/min	Factory	O	O
See Blower Data Tables for usage and selection	Kit #4 708-871 rev/min	Factory	O	O
	Kit #5 788-988 rev/min	Factory	O	O
	Kit #6 708-871 rev/min	Factory	O	O
	Kit #7 788-988 rev/min	Factory	O	O
	Kit #8 871-1071 rev/min	Factory	O	O
	Kit #10 871-1071 rev/min	Factory		O
	Kit #11 945-1138 rev/min	Factory		O
CABINET				
Corrosion Protection Factory		Factory	O	O
Combination Coil/Hail Guards	K1GARD51C-1	**13T26**	X	X
Hinged Access Panels		Factory	O	O
CONTROLS				
NOTE - Also see Conventional Thermostat Control Systems on page for Additional Options.				
Smoke Detector - Supply or Return (Power board and one sensor)	C1SNSR44C-1	**83W40**	X	X
Smoke Detector - Supply and Return (Power board and two sensors)	C1SNSR43C-1	**83W41**	X	X
INDOOR AIR QUALITY				
Air Filters				
High Efficiency Air Filters 610 x 610 x 51 mm (Order 6 per unit)	MERV 8 - C1FLTR15C-1-	**54W67**	X	X
	MERV 13 - C1FLTR40C-1-	**52W40**	X	X
Replacement Media Filter With Metal Mesh Frame (includes non-pleated filter media)	C1FLTR30C-1-	**44N61**	X	X
Indoor Air Quality (CO_2) Sensors				
Sensor - Wall-mount, off-white plastic cover with LCD display	C0SNSR50AE1L	**77N39**	X	X
Sensor - Wall-mount, off-white plastic cover, no display	C0SNSR52AE1L	**87N53**	X	X
Sensor - Black plastic case with LCD display, rated for plenum mounting	C0SNSR51AE1L	**87N52**	X	X
Sensor - Wall-mount, black plastic case, no display, rated for plenum mounting	C0MISC19AE1	**87N54**	X	X
CO_2 Sensor Duct Mounting Kit - for downflow applications	C0MISC19AE1-	**85L43**	X	X
Aspiration Box - for duct mounting non-plenum rated CO_2 sensors (**87N53** or **77N39**)	C0MISC16AE1-	**90N43**	X	X
UVC Germicidal Light Kit				
[1] UVC Light Kit (220V-1ph)	C1UVCL10C-1	**54W65**	X	X

[1] Lamps operate on 220V single-phase power supply. Step-down transformer may be ordered separately for 380/420V primary to 220V secondary units. Alternately, 220V power supply may be used to directly power the UVC ballast(s).

NOTE - Catalog and model numbers shown are for ordering field installed accessories.
OX = Configure To Order (Factory Installed) or Field Installed
O = Configure To Order (Factory Installed)
X = Field Installed

OPTIONS / ACCESSORIES

Item Description	Model Number	Catalog Number	Unit Size 180	Unit Size 240
ELECTRICAL				
Voltage 50 hz	380/420V - 3 phase	Factory	O	O
[1] ELECTRIC HEAT				
11.5 kW	380/420V-3ph - C1EH0115C-1M	**67W96**	X	X
23 kW	380/420V-3ph - C1EH0230C21M	**67W98**	X	X
34.5 kW	380/420V-3ph - C1EH0345C21M	**68W00**	X	X
45.9 kW	380/420V-3ph - C1EH0459C21M	**68W02**	X	X
68.9 kW	380/420V-3ph - C1EH0689C-1M	**68W03**		X
ECONOMIZER				
Standard Economizer With Outdoor Air Hood				
Standard Economizer Downflow or Horizontal Applications - Includes Outdoor Air Hood, order Downflow or Horizontal Barometric Relief Dampers separately	K1ECON20C-3	**13U48**	OX	OX
Standard Economizer Controls				
Differential Enthalpy	Order 2 - C1SNSR64FF1	**53W64**	X	X
Single Enthalpy	C1SNSR64FF1	**53W64**	X	X
High Performance Economizer With Outdoor Air Hood				
High Performance Economizer Downflow or Horizontal Applications - Includes Outdoor Air Hood, order Downflow or Horizontal Barometric Relief Dampers separately	K1ECON22C-2	**16X77**	OX	OX
High Performance Economizer Controls				
Single Enthalpy Control	C1SNSR60FF1	**10Z75**	OX	OX
Differential Enthalpy Control (order 2)	C1SNSR60FF1	**10Z75**	X	X
[2] Barometric Relief Dampers With Exhaust Hood				
Downflow Barometric Relief Dampers	C1DAMP50C	**54W78**	OX	OX
Horizontal Barometric Relief Dampers	LAGEDH18/24	**16K99**	X	X
OUTDOOR AIR				
Outdoor Air Dampers With Outdoor Air Hood				
Motorized	C1DAMP20C-1	**13U04**	OX	OX
Manual	C1DAMP10C-2	**13U05**	OX	OX
POWER EXHAUST				
Standard Static	380/420V - C1PWRE11C-1M	**75W93**	X	X

[1] Nominal kW at 400V-3ph-50hz.

[2] When Downflow Barometric Relief Dampers are factory installed the Exhaust Hood (85M26) must be ordered separately for field installation. When Downflow Barometric Relief Dampers are ordered for field installation the Exhaust Hood is furnished with the dampers.

NOTE - Catalog and model numbers shown are for ordering field installed accessories.
OX = Configure To Order (Factory Installed) or Field Installed
O = Configure To Order (Factory Installed)
X = Field Installed

OPTIONS / ACCESSORIES

Item Description	Model Number	Catalog Number	Unit Size 180	Unit Size 240
ROOF CURBS				
Hybrid Roof Curbs, Downflow				
203 mm height	C1CURB70C-1	**11F58**	X	X
356 mm height	C1CURB71C-1	**11F59**	X	X
457 mm height	C1CURB72C-1	**11F60**	X	X
610 mm height	C1CURB73C-1	**11F61**	X	X
Adjustable Pitch Curb, Downflow				
356 mm height	L1CURB55C	**43W26**	X	X
Standard Roof Curbs, Horizontal - Requires Horizontal Return Air Panel Kit				
660 mm height - slab applications	C1CURB14C-1	**11T89**	X	X
940 mm height - rooftop applications	C1CURB15C-1	**11T96**	X	X
Insulation Kit For Standard Horizontal Curbs				
for C1CURB14C-1	C1INSU11C-1-	**73K32**	X	X
for C1CURB15C-1	C1INSU13C-1-	**73K34**	X	X
Horizontal Return Air Panel Kit				
Required for Horizontal Applications with Roof Curb	C1HRAP10C-1-	**87M00**	X	X
CEILING DIFFUSERS				
Step-Down - Order one	RTD11-185S	**13K63**	X	
	RTD11-275S	**13K64**		X
Flush - Order one	FD11-185S	**13K58**	X	
	FD11-275S	**13K59**		X
Transitions (Supply and Return) - Order one	C1DIFF33C-1	**12X68**	X	
	C1DIFF34C-1	**12X70**		X

NOTE - Catalog and model numbers shown are for ordering field installed accessories.
OX = Configure To Order (Factory Installed) or Field Installed
O = Configure To Order (Factory Installed)
X = Field Installed

SPECIFICATIONS

General Data	**Nominal kW (Tons)**	**52.8 (15)**	**70.3 (20)**
	Model Number	**KHA180S4B**	**KHA240S4B**
	Efficiency Type	**Standard**	**Standard**
	Blower Type	CAV (Constant Air Volume)	CAV (Constant Air Volume)
Cooling Performance	Gross Cooling Capacity - kW (Btuh)	45.7 (156 000)	58.0 (198 000)
	[1] Net Cooling Capacity - kW (Btuh)	44.2 (151 000)	55.4 (189 000)
	AHRI Rated Air Flow - L/s (cfm)	2830 (6000)	3540 (7500)
	Total Unit Power - kW	14.0	17.5
	[1] EER (Btuh/Watt)	10.8	10.8
	[1] IEER (Btuh/Watt)	11.8	11.0
	Refrigerant Type	R-410A	R-410A
	Refrigerant Charge Furnished Circuit 1	9.53 kg (21 lbs. 0 oz.)	11.79 kg (26 lbs. 0 oz.)
	Refrigerant Charge Furnished Circuit 2	9.53 kg (21 lbs. 0 oz.)	11.79 kg (26 lbs. 0 oz.)
Heating Performance	[1] Total High Heat Capacity - kW (Btuh)	46.6 (159 000)	57.1 (196 000)
	Total Unit Power - kW	13.7	17.0
	[1] Coefficient of Performance	3.4	3.4
	[1] Total Low Heat Capacity - kW (Btuh)	27.0 (92 000)	33.1 (113 000)
	Total Unit Power (kW)	12.8	15.8
	[1] Coefficient of Performance	2.1	2.1
Electric Heat Available - See page 9		11.5, 23, 34.5, 45.9 kW	11.5, 23, 34.5, 45.9, 68.9 kW
Compressor Type (number)		Scroll (2)	Scroll (2)
Outdoor Coils	Net face area (total) - m^2 (sq. ft.)	5.3 (57.0)	5.3 (57.0)
	Tube diameter - mm (in.)	9.5 (3/8)	9.5 (3/8)
	Number of rows	1.66	2
	Fins per m (Fins per inch)	787 (20)	787 (20)
Outdoor Coil Fans	Motor - (No.) W (HP)	(4) 250 (1/3)	(4) 250 (1/3)
	Motor rev/min	896	896
	Total Motor watts	1146	1146
	Diameter - (No.) mm (in.)	(4) 610 (24)	(4) 610 (24)
	Number of blades	3	3
	Total Air volume - L/s (cfm)	6075 (12 875)	6075 (12 875)
Indoor Coils	Net face area (total) - m^2 (sq. ft.)	1.99 (21.4)	1.99 (21.4)
	Tube diameter - mm (in.)	9.5 (3/8)	9.5 (3/8)
	Number of rows	3	4
	Fins per m (Fins per inch)	551 (14)	551 (14)
	Drain connection - No. and size	(1) 1 in. FPT	(1) 1 in. FPT
	Expansion device type	Balance port TXV, removable head	
[2] Indoor Blower and Drive Selection	Nominal Motor kW (HP)	2.2 kW (3 hp)	3.7 kW (5 hp)
	Maximum usable motor kW (HP)	(3.45 hp)	(5.75 hp)
	Kit # (rev/min range)	#3 - 571 - 721 #4 - 708 - 871	#3 - 571 - 721 #4 - 708 - 871 #5 - 788 - 988
	Nominal Motor kW (HP)	3.7 kW (5 hp)	5.6 kW (7.5 hp)
	Maximum usable motor kW (HP)	(5.75 hp)	(8.63 hp)
	Kit # (rev/min range)	#3 - 571 - 721 #4 - 708 - 871 #5 - 788 - 988	#6 - 708 - 871 #7 - 788 - 988 #8 - 871 - 1071
	Nominal Motor kW (HP)	5.6 kW (7.5 hp)	7.5 kW (10 hp)
	Maximum usable motor kW (HP)	(8.63 hp)	(11.5 hp)
	Kit # (rev/min range)	#6 - 708 - 871 #7 - 788 - 988 #8 - 871 - 1071	#7 - 788 - 988 #10 - 871 - 1071 #11 - 945 - 1138
	Blower wheel nominal diameter x width - mm (in.)	(2) 381 x 381 (15 x 15)	
Filters	Type of filter	Fiberglass, disposable	
	Number and size - mm (in.)	(6) 610 x 610 x 51 (24 x 24 x 2)	
Electrical characteristics		380/420V - 50 hertz - 3 phase	

NOTE - Net capacity includes evaporator blower motor heat deduction. Gross capacity does not include evaporator blower motor heat deduction.

[1] Rating test conditions are those included in Air-Conditioning, Heating and Refrigeration Institute (AHRI) Standard 340/360 while operating at rated voltage and air volumes:
Cooling Ratings − 35°C (95°F) outdoor air temperature and 27°C (80°F) db/19°C (67°F) wb entering indoor coil air.
High Temperature Heating Ratings − 8°C (47°F) db/6°C (43°F) wb outdoor air temperature and 21°C (70°F) entering indoor coil air.
Low Temperature Heating Ratings − -8°C (17°F) db/-9°C (15°F) wb outdoor air temperature and 21°C (70°F) entering indoor coil air.

[2] Using total air volume and system static pressure requirements determine from blower performance tables rev/min and motor output required. Maximum usable output of motors furnished are shown. If motors of comparable output are used, be sure to keep within the service factor limitations outlined on the motor nameplate. Standard motor and drive kit furnished with unit.

COOLING / HEATING RATINGS

NOTE − For Temperatures and Capacities not shown in tables, see bulletin − Cooling Unit Rating Table Correction Factor Data in Miscellaneous Engineering Data section.

52.8 KW COOLING STANDARD EFFICIENCY KHA180S4 (1ST STAGE)

Entering Wet Bulb Temperature	Total Air Volume	Outdoor Air Temperature Entering Outdoor Coil																			
		18.3°C					23.9°C					29.4°C					35°C				
		Total Cool Cap.	Comp. Motor Input	Sensible To Total Ratio (S/T) Dry Bulb			Total Cool Cap.	Comp. Motor Input	Sensible To Total Ratio (S/T) Dry Bulb			Total Cool Cap.	Comp. Motor Input	Sensible To Total Ratio (S/T) Dry Bulb			Total Cool Cap.	Comp. Motor Input	Sensible To Total Ratio (S/T) Dry Bulb		
	L/s	kW	kW	24°C	27°C	29°C	kW	kW	24°C	27°C	29°C	kW	kW	24°C	27°C	29°C	kW	kW	24°C	27°C	29°C
17.2°C	2265	24.4	4.04	0.73	0.87	0.99	23.3	4.48	0.74	0.88	1	22.1	4.97	0.75	0.9	1	20.7	5.54	0.76	0.92	1
	2832	25.6	4.09	0.78	0.94	1	24.4	4.53	0.79	0.96	1	23.1	5.03	0.81	0.98	1	21.8	5.59	0.83	1	1
	3398	26.5	4.14	0.83	0.99	1	25.3	4.58	0.85	1	1	24.1	5.07	0.87	1	1	22.8	5.65	0.89	1	1
19.4°C	2265	25.8	4.11	0.58	0.71	0.83	24.6	4.55	0.58	0.72	0.85	23.4	5.04	0.59	0.73	0.87	22	5.6	0.59	0.74	0.89
	2832	27.1	4.17	0.61	0.76	0.91	25.8	4.61	0.62	0.77	0.93	24.4	5.1	0.62	0.79	0.95	23	5.66	0.63	0.81	0.97
	3398	27.9	4.22	0.64	0.82	0.97	26.6	4.65	0.65	0.83	0.99	25.2	5.14	0.66	0.85	1	23.7	5.7	0.67	0.87	1
21.7°C	2265	27.2	4.17	0.44	0.57	0.69	26	4.62	0.44	0.57	0.69	24.7	5.11	0.44	0.57	0.71	23.3	5.68	0.43	0.58	0.72
	2832	28.5	4.24	0.46	0.6	0.74	27.2	4.68	0.45	0.61	0.75	25.8	5.17	0.45	0.61	0.77	24.4	5.73	0.45	0.62	0.79
	3398	29.4	4.3	0.47	0.63	0.8	28.1	4.73	0.47	0.64	0.81	26.6	5.22	0.47	0.65	0.83	25	5.78	0.47	0.66	0.85

52.8 KW COOLING STANDARD EFFICIENCY KHA180S4 (2ND STAGE)

Entering Wet Bulb Temperature	Total Air Volume	Outdoor Air Temperature Entering Outdoor Coil																			
		26.7°C					35°C					43.3°C					51.7°C				
		Total Cool Cap.	Comp. Motor Input	Sensible To Total Ratio (S/T) Dry Bulb			Total Cool Cap.	Comp. Motor Input	Sensible To Total Ratio (S/T) Dry Bulb			Total Cool Cap.	Comp. Motor Input	Sensible To Total Ratio (S/T) Dry Bulb			Total Cool Cap.	Comp. Motor Input	Sensible To Total Ratio (S/T) Dry Bulb		
	L/s	kW	kW	24°C	27°C	29°C	kW	kW	24°C	27°C	29°C	kW	kW	24°C	27°C	29°C	kW	kW	24°C	27°C	29°C
17.2°C	2265	45.1	9.36	0.75	0.89	0.99	41.3	10.98	0.76	0.92	1	37	12.96	0.79	0.96	1	32.3	15.46	0.84	0.99	1
	2832	47.2	9.47	0.8	0.96	1	43.2	11.09	0.83	0.98	1	39.1	13.07	0.86	1	1	34.5	15.59	0.92	1	1
	3398	49.1	9.58	0.85	0.99	1	45.1	11.19	0.89	1	1	41	13.2	0.93	1	1	36.2	15.69	0.98	1	1
19.4°C	2265	47.8	9.5	0.59	0.72	0.86	43.8	11.12	0.59	0.74	0.89	39.3	13.09	0.6	0.77	0.93	34.2	15.56	0.62	0.81	0.98
	2832	50	9.62	0.62	0.78	0.93	45.8	11.23	0.63	0.81	0.96	41	13.2	0.65	0.84	0.99	35.6	15.66	0.68	0.9	1
	3398	51.5	9.7	0.66	0.84	0.98	47.1	11.31	0.67	0.87	1	42.2	13.25	0.69	0.91	1	36.5	15.71	0.73	0.97	1
21.7°C	2265	50.3	9.64	0.44	0.57	0.7	46.2	11.25	0.44	0.58	0.72	41.7	13.23	0.43	0.59	0.75	36.4	15.71	0.43	0.62	0.79
	2832	52.7	9.77	0.46	0.61	0.76	48.3	11.38	0.46	0.62	0.79	43.5	13.34	0.46	0.64	0.82	37.8	15.79	0.46	0.67	0.88
	3398	54.3	9.86	0.47	0.65	0.82	49.8	11.47	0.47	0.67	0.85	44.7	13.41	0.48	0.69	0.89	38.7	15.86	0.48	0.73	0.95

Entering Wet Bulb Temperature	Total Air Volume	Outdoor Air Temperature Entering Outdoor Coil									
		48°C					50°C				
		Total Cool Cap.	Comp. Motor Input	Sensible To Total Ratio (S/T) Dry Bulb			Total Cool Cap.	Comp. Motor Input	Sensible To Total Ratio (S/T) Dry Bulb		
	L/s	kW	kW	24°C	27°C	29°C	kW	kW	24°C	27°C	29°C
17.2°C	2265	34.3	14.27	0.81	0.98	1.00	33.3	14.90	0.83	0.99	1.00
	2832	36.5	14.41	0.89	1.00	1.00	35.5	15.04	0.91	1.00	1.00
	3398	38.4	14.51	0.96	1.00	1.00	37.2	15.15	0.97	1.00	1.00
19.4°C	2265	36.6	14.41	0.61	0.79	0.95	35.3	15.02	0.62	0.80	0.97
	2832	38.0	14.49	0.66	0.87	1.00	36.7	15.11	0.67	0.89	1.00
	3398	39.1	14.56	0.71	0.94	1.00	37.7	15.18	0.72	0.95	1.00
21.7°C	2265	38.9	14.55	0.43	0.60	0.77	37.5	15.17	0.43	0.61	0.78
	2832	40.4	14.65	0.46	0.66	0.85	39.0	15.25	0.46	0.67	0.86
	3398	41.5	14.72	0.48	0.71	0.92	40.0	15.31	0.48	0.72	0.94

52.8 KW HEATING STANDARD EFFICIENCY KHA180S4

Indoor Coil Air Volume 21°C Dry Bulb	Air Temperature Entering Outdoor Coil									
	18°C		7°C		-4°C		-15°C		-28°C	
	Total Heating Capacity	Comp. Motor Input	Total Heating Capacity	Comp. Motor Input	Total Heating Capacity	Comp. Motor Input	Total Heating Capacity	Comp. Motor Input	Total Heating Capacity	Comp. Motor Input
L/s	kW	kW	kW	kW	kW	kW	kW	kW	kW	kW
2265	54.6	11.5	44.9	10.8	29.1	10.1	21.0	8.8	10.2	6.5
2830	55.3	11.0	45.6	10.3	29.8	9.5	21.7	8.3	10.8	6.0
3400	56.1	10.6	46.4	10.0	30.4	9.2	22.2	8.0	11.3	5.7

COOLING / HEATING RATINGS

NOTE − For Temperatures and Capacities not shown in tables, see bulletin − Cooling Unit Rating Table Correction Factor Data in Miscellaneous Engineering Data section.

70.3 KW COOLING STANDARD EFFICIENCY KHA240S4 (1ST STAGE)

Entering Wet Bulb Temperature	Total Air Volume	Outdoor Air Temperature Entering Outdoor Coil																			
		18.3°C					23.9°C					29.4°C					35°C				
		Total Cool Cap.	Comp. Motor Input	Sensible To Total Ratio (S/T) Dry Bulb			Total Cool Cap.	Comp. Motor Input	Sensible To Total Ratio (S/T) Dry Bulb			Total Cool Cap.	Comp. Motor Input	Sensible To Total Ratio (S/T) Dry Bulb			Total Cool Cap.	Comp. Motor Input	Sensible To Total Ratio (S/T) Dry Bulb		
	L/s	kW	kW	24°C	27°C	29°C	kW	kW	24°C	27°C	29°C	kW	kW	24°C	27°C	29°C	kW	kW	24°C	27°C	29°C
17.2°C	3020	31.9	4.83	0.73	0.86	0.98	30.3	5.41	0.73	0.88	1	28.6	6.05	0.75	0.89	1	27	6.78	0.76	0.91	1
	3776	33.4	4.9	0.78	0.93	1	31.8	5.48	0.79	0.95	1	30.1	6.12	0.81	0.97	1	28.3	6.84	0.83	0.99	1
	4531	34.7	4.97	0.83	0.99	1	33.1	5.54	0.85	1	1	31.4	6.18	0.87	1	1	29.8	6.92	0.89	1	1
19.4°C	3020	33.8	4.93	0.57	0.7	0.83	32.3	5.5	0.58	0.71	0.84	30.6	6.14	0.58	0.72	0.86	28.8	6.87	0.58	0.74	0.88
	3776	35.5	5.01	0.6	0.76	0.9	33.7	5.58	0.61	0.77	0.92	32	6.21	0.62	0.79	0.94	30.1	6.93	0.63	0.81	0.97
	4531	36.7	5.07	0.64	0.81	0.97	34.8	5.63	0.65	0.83	0.99	32.9	6.26	0.66	0.85	1	30.9	6.98	0.67	0.87	1
21.7°C	3020	35.9	5.02	0.44	0.56	0.68	34.2	5.6	0.44	0.56	0.69	32.5	6.24	0.43	0.57	0.7	30.6	6.95	0.43	0.58	0.72
	3776	37.6	5.11	0.45	0.59	0.73	35.7	5.68	0.45	0.6	0.74	33.9	6.31	0.45	0.61	0.77	31.9	7.03	0.45	0.62	0.79
	4531	38.8	5.18	0.46	0.63	0.79	36.9	5.75	0.46	0.64	0.81	34.9	6.37	0.46	0.65	0.83	32.8	7.07	0.47	0.66	0.85

70.3 KW COOLING STANDARD EFFICIENCY KHA240S4 (2ND STAGE)

Entering Wet Bulb Temperature	Total Air Volume	Outdoor Air Temperature Entering Outdoor Coil																			
		26.7°C					35°C					43.3°C					51.7°C				
		Total Cool Cap.	Comp. Motor Input	Sensible To Total Ratio (S/T) Dry Bulb			Total Cool Cap.	Comp. Motor Input	Sensible To Total Ratio (S/T) Dry Bulb			Total Cool Cap.	Comp. Motor Input	Sensible To Total Ratio (S/T) Dry Bulb			Total Cool Cap.	Comp. Motor Input	Sensible To Total Ratio (S/T) Dry Bulb		
	L/s	kW	kW	24°C	27°C	29°C	kW	kW	24°C	27°C	29°C	kW	kW	24°C	27°C	29°C	kW	kW	24°C	27°C	29°C
17.2°C	3020	57.7	11.49	0.76	0.9	1	52.7	13.61	0.78	0.94	1	47.1	16.2	0.82	0.98	1	41	19.4	0.86	1	1
	3776	60.4	11.64	0.83	0.98	1	55.3	13.75	0.85	1	1	50.1	16.35	0.89	1	1	43.9	19.56	0.94	1	1
	4531	63.2	11.78	0.88	1	1	58.1	13.9	0.91	1	1	52.5	16.5	0.95	1	1	45.9	19.69	1	1	1
19.4°C	3020	61.5	11.7	0.59	0.74	0.87	56.1	13.79	0.6	0.76	0.9	50.2	16.35	0.61	0.79	0.95	43.2	19.53	0.64	0.84	0.99
	3776	64.1	11.83	0.63	0.8	0.95	58.5	13.92	0.65	0.83	0.98	52.3	16.47	0.67	0.87	1	45	19.62	0.7	0.93	1
	4531	66.1	11.94	0.67	0.86	1	60.3	14.03	0.69	0.9	1	53.7	16.55	0.72	0.94	1	46.2	19.69	0.76	0.99	1
21.7°C	3020	65.1	11.89	0.44	0.58	0.72	59.7	13.98	0.44	0.59	0.74	53.4	16.53	0.44	0.6	0.77	46.2	19.68	0.44	0.63	0.82
	3776	67.9	12.05	0.46	0.62	0.78	62	14.13	0.46	0.64	0.81	55.6	16.66	0.46	0.66	0.85	47.9	19.82	0.47	0.7	0.91
	4531	69.9	12.17	0.48	0.66	0.84	63.8	14.23	0.48	0.69	0.87	57.1	16.76	0.48	0.72	0.92	49	19.89	0.49	0.76	0.98

Entering Wet Bulb Temperature	Total Air Volume	Outdoor Air Temperature Entering Outdoor Coil									
		48°C					50°C				
		Total Cool Cap.	Comp. Motor Input	Sensible To Total Ratio (S/T) Dry Bulb			Total Cool Cap.	Comp. Motor Input	Sensible To Total Ratio (S/T) Dry Bulb		
	L/s	kW	kW	24°C	27°C	29°C	kW	kW	24°C	27°C	29°C
17.2°C	3020	43.8	17900	.84	.99	1.00	42.3	18690	.85	1.00	1.00
	3776	46.8	18.07	0.92	1.00	1.00	45.2	18.86	0.93	1.00	1.00
	4531	49.1	18.18	0.98	1.00	1.00	47.4	18.98	0.99	1.00	1.00
19.4°C	3020	46.5	18.05	0.63	0.82	0.98	44.8	18.82	0.63	0.83	0.99
	3776	48.3	18.14	0.68	0.90	1.00	46.5	18.93	0.69	0.91	1.00
	4531	49.7	18.21	0.74	0.97	1.00	47.8	19.01	0.75	0.98	1.00
21.7°C	3020	49.7	18.21	0.44	0.62	0.79	47.9	19.00	0.44	0.63	0.81
	3776	51.5	18.33	0.46	0.68	0.88	49.6	19.11	0.46	0.69	0.89
	4531	52.7	18.40	0.49	0.74	0.95	50.8	19.17	0.49	0.75	0.97

70.3 KW HEATING STANDARD EFFICIENCY KHA240S4

Indoor Coil Air Volume 21°C Dry Bulb	Air Temperature Entering Outdoor Coil									
	18°C		7°C		-4°C		-15°C		-28°C	
	Total Heating Capacity	Comp. Motor Input	Total Heating Capacity	Comp. Motor Input	Total Heating Capacity	Comp. Motor Input	Total Heating Capacity	Comp. Motor Input	Total Heating Capacity	Comp. Motor Input
L/s	kW	kW	kW	kW	kW	kW	kW	kW	kW	kW
3020	67.3	13.9	54.9	13.0	35.9	12.2	25.1	10.7	12.0	8.0
3775	68.9	13.2	56.5	12.3	36.8	11.4	26.5	9.9	13.3	7.2
4530	70.2	12.7	57.8	11.8	37.9	10.9	27.5	9.5	14.4	6.8

BLOWER DATA

BLOWER TABLE INCLUDES RESISTANCE FOR BASE UNIT ONLY WITH DRY INDOOR COIL & AIR FILTERS IN PLACE.

FOR ALL UNITS ADD:

1 - Wet indoor coil air resistance of selected unit.
2 - Any factory installed options air resistance (electric heat, economizer, etc.)
3 - Any field installed accessories air resistance (electric heat, duct resistance, diffuser, etc.)

Then determine from blower table blower motor output and drive required.
See page 16 for wet coil and option/accessory air resistance data.
See page 16 for factory installed drive kit specifications.

MINIMUM AIR VOLUME REQUIRED FOR USE WITH OPTIONAL ELECTRIC HEAT

All units require 2830 L/s (6000 cfm) minimum air with electric heat.

Air Volume		TOTAL STATIC PRESSURE - Pa (Inches Water Gauge)																	
		100 (0.40)			150 (0.60)			200 (0.80)			250 (1.00)			300 (1.20)			350 (1.40)		
L/s	cfm	rev/ min	kW	BHP	rev/ min	kW	BHP	rev/ min	kW	BHP	rev/ min	kW	BHP	rev/ min	kW	BHP	rev/ min	kW	BHP
2240	4750	575	0.82	1.10	660	1.08	1.45	740	1.34	1.80	810	1.60	2.15	870	1.86	2.50	930	2.13	2.85
2360	5000	585	0.93	1.25	670	1.19	1.60	750	1.45	1.95	815	1.72	2.30	880	2.01	2.70	940	2.27	3.05
2480	5250	595	1.01	1.35	680	1.27	1.70	755	1.57	2.10	825	1.86	2.50	890	2.16	2.90	945	2.42	3.25
2595	5500	605	1.08	1.45	690	1.38	1.85	765	1.68	2.25	835	1.98	2.65	895	2.27	3.05	955	2.57	3.45
2715	5750	615	1.19	1.60	700	1.49	2.00	775	1.83	2.45	840	2.13	2.85	905	2.42	3.25	960	2.72	3.65
2830	6000	630	1.30	1.75	710	1.60	2.15	785	1.94	2.60	850	2.27	3.05	910	2.57	3.45	970	2.91	3.90
2950	6250	640	1.42	1.90	720	1.75	2.35	795	2.09	2.80	860	2.42	3.25	920	2.76	3.70	975	3.09	4.15
3070	6500	650	1.53	2.05	730	1.86	2.50	805	2.24	3.00	870	2.57	3.45	930	2.95	3.95	985	3.28	4.40
3185	6750	665	1.64	2.20	745	2.01	2.70	815	2.39	3.20	880	2.76	3.70	940	3.13	4.20	995	3.47	4.65
3305	7000	675	1.75	2.35	755	2.16	2.90	825	2.54	3.40	890	2.95	3.95	950	3.32	4.45	1005	3.69	4.95
3420	7250	690	1.94	2.60	765	2.31	3.10	835	2.72	3.65	900	3.09	4.15	955	3.47	4.65	1015	3.91	5.25
3540	7500	700	2.05	2.75	775	2.46	3.30	845	2.87	3.85	910	3.32	4.45	965	3.69	4.95	1020	4.10	5.50
3660	7750	715	2.24	3.00	790	2.65	3.55	855	3.06	4.10	920	3.50	4.70	975	3.91	5.25	1030	4.33	5.80
3775	8000	725	2.39	3.20	800	2.83	3.80	865	3.24	4.35	930	3.69	4.95	985	4.10	5.50	1040	4.55	6.10
3895	8250	740	2.54	3.40	810	2.98	4.00	880	3.47	4.65	940	3.91	5.25	995	4.36	5.85	1050	4.81	6.45
4010	8500	750	2.72	3.65	825	3.21	4.30	890	3.65	4.90	950	4.14	5.55	1005	4.59	6.15	1060	5.07	6.80
4130	8750	765	2.91	3.90	835	3.39	4.55	900	3.88	5.20	960	4.36	5.85	1015	4.81	6.45	1070	5.33	7.15
4250	9000	780	3.13	4.20	850	3.62	4.85	910	4.10	5.50	970	4.59	6.15	1025	5.07	6.80	1080	5.59	7.50
4365	9250	790	3.32	4.45	860	3.84	5.15	925	4.36	5.85	985	4.88	6.55	1040	5.37	7.20	1090	5.85	7.85
4485	9500	805	3.54	4.75	875	4.06	5.45	935	4.59	6.15	995	5.15	6.90	1050	5.67	7.60	1100	6.15	8.25
4600	9750	820	3.77	5.05	885	4.29	5.75	950	4.88	6.55	1005	5.37	7.20	1060	5.93	7.95	1110	6.45	8.65
4720	10 000	835	4.03	5.40	900	4.59	6.15	960	5.11	6.85	1015	5.67	7.60	1070	6.23	8.35	1120	6.75	9.05
4835	10 250	845	4.21	5.65	910	4.81	6.45	970	5.37	7.20	1030	5.97	8.00	1080	6.52	8.75	1135	7.12	9.55
4955	10 500	860	4.47	6.00	925	5.11	6.85	985	5.70	7.65	1040	6.26	8.40	1095	6.86	9.20	1145	7.46	10.00
5075	10 750	875	4.77	6.40	940	5.41	7.25	1000	6.00	8.05	1055	6.60	8.85	1105	7.20	9.65	1155	7.79	10.45
5190	11 000	890	5.07	6.80	950	5.67	7.60	1010	6.30	8.45	1065	6.94	9.30	1115	7.49	10.05	1165	8.13	10.90

CONTINUED ON NEXT PAGE

BLOWER DATA

BLOWER TABLE INCLUDES RESISTANCE FOR BASE UNIT ONLY WITH DRY INDOOR COIL & AIR FILTERS IN PLACE.

FOR ALL UNITS ADD:
1 - Wet indoor coil air resistance of selected unit.
2 - Any factory installed options air resistance (electric heat, economizer, etc.)
3 - Any field installed accessories air resistance (electric heat, duct resistance, diffuser, etc.)

Then determine from blower table blower motor output and drive required.
See page 16 for wet coil and option/accessory air resistance data.
See page 16 for factory installed drive kit specifications.

MINIMUM AIR VOLUME REQUIRED FOR USE WITH OPTIONAL ELECTRIC HEAT

All units require 2830 L/s (6000 cfm) minimum air with electric heat.

Air Volume		TOTAL STATIC PRESSURE - Pa (Inches Water Gauge)																	
		400 (1.60)			450 (1.80)			500 (2.00)			550 (2.20)			600 (2.40)			650 (2.60)		
L/s	cfm	rev/ min	kW	BHP	rev/ min	kW	BHP	rev/ min	kW	BHP	rev/ min	kW	BHP	rev/ min	kW	BHP	rev/ min	kW	BHP
2240	4750	985	2.39	3.20	1040	2.65	3.55	1085	2.91	3.90	1135	3.17	4.25	1180	3.47	4.65	1225	3.73	5.00
2360	5000	995	2.54	3.40	1045	2.83	3.80	1095	3.09	4.15	1140	3.36	4.50	1185	3.65	4.90	1230	3.95	5.30
2480	5250	1000	2.72	3.65	1050	2.98	4.00	1100	3.28	4.40	1150	3.58	4.80	1195	3.88	5.20	1235	4.18	5.60
2595	5500	1010	2.87	3.85	1060	3.17	4.25	1110	3.50	4.70	1155	3.80	5.10	1200	4.10	5.50	1240	4.40	5.90
2715	5750	1015	3.06	4.10	1065	3.36	4.50	1115	3.69	4.95	1160	3.99	5.35	1205	4.33	5.80	1250	4.66	6.25
2830	6000	1025	3.24	4.35	1075	3.58	4.80	1120	3.88	5.20	1170	4.21	5.65	1215	4.55	6.10	1255	4.88	6.55
2950	6250	1030	3.43	4.60	1080	3.77	5.05	1130	4.10	5.50	1175	4.44	5.95	1220	4.81	6.45	1265	5.15	6.90
3070	6500	1040	3.62	4.85	1090	3.99	5.35	1140	4.36	5.85	1185	4.70	6.30	1225	5.03	6.75	1270	5.41	7.25
3185	6750	1045	3.80	5.10	1095	4.18	5.60	1145	4.55	6.10	1190	4.92	6.60	1235	5.29	7.10	1275	5.67	7.60
3305	7000	1055	4.03	5.40	1105	4.44	5.95	1155	4.81	6.45	1200	5.18	6.95	1240	5.56	7.45	1285	5.97	8.00
3420	7250	1065	4.29	5.75	1115	4.66	6.25	1160	5.03	6.75	1205	5.44	7.30	1250	5.85	7.85	1290	6.23	8.35
3540	7500	1075	4.51	6.05	1125	4.92	6.60	1170	5.33	7.15	1215	5.70	7.65	1260	6.15	8.25	1300	6.52	8.75
3660	7750	1080	4.74	6.35	1130	5.15	6.90	1180	5.59	7.50	1225	6.00	8.05	1265	6.41	8.60	1305	6.82	9.15
3775	8000	1090	5.00	6.70	1140	5.41	7.25	1185	5.85	7.85	1230	6.26	8.40	1275	6.71	9.00	1315	7.16	9.60
3895	8250	1100	5.26	7.05	1150	5.70	7.65	1195	6.15	8.25	1240	6.60	8.85	1280	7.01	9.40	1325	7.49	10.05
4010	8500	1110	5.52	7.40	1160	6.00	8.05	1205	6.45	8.65	1250	6.90	9.25	1290	7.35	9.85	1330	7.79	10.45
4130	8750	1120	5.78	7.75	1165	6.23	8.35	1215	6.75	9.05	1255	7.20	9.65	1300	7.68	10.30	1340	8.13	10.90
4250	9000	1130	6.08	8.15	1175	6.52	8.75	1220	7.01	9.40	1265	7.53	10.10	1310	8.05	10.80	1350	8.50	11.40
4365	9250	1140	6.38	8.55	1185	6.86	9.20	1230	7.35	9.85	1275	7.87	10.55	1315	8.35	11.20	- - -	- - -	- - -
4485	9500	1150	6.67	8.95	1195	7.16	9.60	1240	7.68	10.30	1285	8.24	11.05	- - -	- - -	- - -	- - -	- - -	- - -
4600	9750	1160	7.01	9.40	1205	7.49	10.05	1250	8.05	10.80	1295	8.58	11.50	- - -	- - -	- - -	- - -	- - -	- - -
4720	10 000	1170	7.31	9.80	1215	7.83	10.50	1260	8.39	11.25	- - -	- - -	- - -	- - -	- - -	- - -	- - -	- - -	- - -
4835	10 250	1180	7.64	10.25	1225	8.20	11.00	- - -	- - -	- - -	- - -	- - -	- - -	- - -	- - -	- - -	- - -	- - -	- - -
4955	10 500	1190	7.98	10.70	1235	8.54	11.45	- - -	- - -	- - -	- - -	- - -	- - -	- - -	- - -	- - -	- - -	- - -	- - -
5075	10 750	1200	8.35	11.20	- - -	- - -	- - -	- - -	- - -	- - -	- - -	- - -	- - -	- - -	- - -	- - -	- - -	- - -	- - -
5190	11 000	- - -	- - -	- - -	- - -	- - -	- - -	- - -	- - -	- - -	- - -	- - -	- - -	- - -	- - -	- - -	- - -	- - -	- - -

BLOWER DATA

FACTORY INSTALLED BELT DRIVE KIT SPECIFICATIONS

Nominal kW	Nominal hp	Maximum kW	Maximum hp	Drive Kit Number	Rev/min Range
2.2	3	2.6	3.45	3	571 - 721
2.2	3	2.6	3.45	4	708 - 871
3.7	5	4.3	5.75	3	685 - 865
3.7	5	4.3	5.75	4	850 - 1045
3.7	5	4.3	5.75	5	945 - 1185
5.6	7.5	6.4	8.63	6	850 - 1045
5.6	7.5	6.4	8.63	7	945 - 1185
5.6	7.5	6.4	8.63	8	1045 - 1285
7.5	10	8.6	11.50	7	945 - 1185
7.5	10	8.6	11.50	10	1045 - 1285
7.5	10	8.6	11.50	11	1135 - 1365

NOTE - Using total air volume and system static pressure requirements determine from blower performance tables rev/min and motor output required. Maximum usable output of motors furnished are shown. If motors of comparable output are used, be sure to keep within the service factor limitations outlined on the motor nameplate.

FACTORY INSTALLED OPTIONS/FIELD INSTALLED ACCESSORY AIR RESISTANCE

Air Volume		Wet Indoor Coil				Electric Heat		Economizer		Filters				Horizontal Roof Curb	
		180		240						MERV 8		MERV 13			
L/s	cfm	Pa	in. w.g.	Pa	in. w.g.	Pa	in. w.g.	Pa	in. w.g.	Pa	in. w.g.	Pa	in. w.g.	Pa	in. w.g.
1890	4000	5	0.02	10	0.04	- - -	- - -	- - -	- - -	10	0.04	15	0.06	15	0.06
2005	4250	5	0.02	10	0.04	- - -	- - -	- - -	- - -	10	0.04	15	0.06	17	0.07
2125	4500	5	0.02	12	0.05	- - -	- - -	- - -	- - -	10	0.04	17	0.07	17	0.07
2240	4750	5	0.02	12	0.05	- - -	- - -	- - -	- - -	10	0.04	17	0.07	20	0.08
2360	5000	5	0.02	12	0.05	- - -	- - -	- - -	- - -	12	0.05	17	0.07	20	0.08
2475	5250	5	0.02	15	0.06	- - -	- - -	- - -	- - -	12	0.05	17	0.07	22	0.09
2595	5500	5	0.02	17	0.07	- - -	- - -	- - -	- - -	12	0.05	17	0.07	25	0.10
2715	5750	7	0.03	17	0.07	- - -	- - -	- - -	- - -	12	0.05	20	0.08	27	0.11
2830	6000	7	0.03	20	0.08	2	.01	- - -	- - -	12	0.05	20	0.08	27	0.11
2950	6250	7	0.03	20	0.08	2	.01	2	0.01	12	0.05	20	0.08	30	0.12
3065	6500	7	0.03	22	0.09	2	.01	5	0.02	12	0.05	20	0.08	32	0.13
3185	6750	10	0.04	25	0.10	2	.01	7	0.03	12	0.05	20	0.08	35	0.14
3305	7000	10	0.04	25	0.10	2	.01	10	0.04	15	0.06	20	0.08	37	0.15
3420	7250	10	0.04	27	0.11	2	.01	12	0.05	15	0.06	22	0.09	40	0.16
3540	7500	12	0.05	30	0.12	2	.01	15	0.06	15	0.06	22	0.09	42	0.17
3775	8000	12	0.05	32	0.13	5	.02	22	0.09	15	0.06	22	0.09	47	0.19
4010	8500	15	0.06	37	0.15	5	.02	27	0.11	15	0.06	22	0.09	52	0.21
4245	9000	17	0.07	40	0.16	10	.04	35	0.14	17	0.07	25	0.10	60	0.24
4485	9500	20	0.08	45	0.18	12	.05	40	0.16	17	0.07	25	0.10	65	0.26
4720	10 000	20	0.08	50	0.20	15	.06	47	0.19	17	0.07	27	0.11	72	0.29
4955	10 500	22	0.09	55	0.22	22	.09	55	0.22	17	0.07	27	0.11	77	0.31
5191	11 000	27	0.11	60	0.24	27	.11	62	0.25	20	0.08	27	0.11	85	0.34

BLOWER DATA

POWER EXHAUST FAN PERFORMANCE

Return Air System Static Pressure		Air Volume Exhausted	
Pa	in. w.g.	L/s	cfm
0	0.00	3395	7195
12	0.05	3230	6845
25	0.10	3040	6440
37	0.15	2795	5925
50	0.20	2545	5395
62	0.25	2275	4820
75	0.30	1990	4215
87	0.35	1690	3580
100	0.40	1380	2925
112	0.45	1055	2235
125	0.50	725	1535

CEILING DIFFUSER AIR RESISTANCE

Air Volume		Step-Down Diffuser												Flush Diffuser			
		RTD11-185S						RTD11-275						FD11-185S		FD11-275	
		2 Ends Open		1 Side/2 Ends Open		All Ends & Sides Open		2 Ends Open		1 Side/2 Ends Open		All Ends & Sides Open					
L/s	cfm	Pa	in. w.g.	Pa	in. w.g.	Pa	in. w.g.	Pa	in. w.g.	Pa	in. w.g.	Pa	in. w.g.	Pa	in. w.g.	Pa	in. w.g.
2360	5000	127	0.51	109	0.44	97	0.39	- - -	- - -	- - -	- - -	- - -	- - -	67	0.27	- - -	- - -
2455	5200	139	0.56	119	0.48	104	0.42	- - -	- - -	- - -	- - -	- - -	- - -	75	0.30	- - -	- - -
2550	5400	152	0.61	129	0.52	112	0.45	- - -	- - -	- - -	- - -	- - -	- - -	82	0.33	- - -	- - -
2645	5600	164	0.66	139	0.56	119	0.48	- - -	- - -	- - -	- - -	- - -	- - -	90	0.36	- - -	- - -
2735	5800	177	0.71	147	0.59	127	0.51	- - -	- - -	- - -	- - -	- - -	- - -	97	0.39	- - -	- - -
2830	6000	189	0.76	157	0.63	137	0.55	90	0.36	77	0.31	67	0.27	104	0.42	72	0.29
2925	6200	199	0.80	169	0.68	147	0.59	- - -	- - -	- - -	- - -	- - -	- - -	114	0.46	- - -	- - -
3020	6400	214	0.86	179	0.72	157	0.63	- - -	- - -	- - -	- - -	- - -	- - -	124	0.50	- - -	- - -
3065	6500	- - -	- - -	- - -	- - -	- - -	- - -	104	0.42	90	0.36	77	0.31	- - -	- - -	85	0.34
3115	6600	229	0.92	191	0.77	167	0.67	- - -	- - -	- - -	- - -	- - -	- - -	134	0.54	- - -	- - -
3210	6800	246	0.99	206	0.83	179	0.72	- - -	- - -	- - -	- - -	- - -	- - -	144	0.58	- - -	- - -
3305	7000	256	1.03	216	0.87	189	0.76	122	0.49	102	0.41	90	0.36	154	0.62	99	0.40
3400	7200	271	1.09	229	0.92	199	0.80	- - -	- - -	- - -	- - -	- - -	- - -	164	0.66	- - -	- - -
3490	7400	286	1.15	241	0.97	209	0.84	- - -	- - -	- - -	- - -	- - -	- - -	174	0.70	- - -	- - -
3540	7500	- - -	- - -	- - -	- - -	- - -	- - -	127	0.51	114	0.46	102	0.41	- - -	- - -	112	0.45
3585	7600	298	1.20	254	1.02	219	0.88	- - -	- - -	- - -	- - -	- - -	- - -	184	0.74	- - -	- - -
3775	8000	- - -	- - -	- - -	- - -	- - -	- - -	147	0.59	122	0.49	107	0.43	- - -	- - -	124	0.50
4010	8500	- - -	- - -	- - -	- - -	- - -	- - -	172	0.69	144	0.58	124	0.50	- - -	- - -	142	0.57
4245	9000	- - -	- - -	- - -	- - -	- - -	- - -	196	0.79	167	0.67	144	0.58	- - -	- - -	164	0.66
4485	9500	- - -	- - -	- - -	- - -	- - -	- - -	221	0.89	186	0.75	162	0.65	- - -	- - -	184	0.74
4720	10 000	- - -	- - -	- - -	- - -	- - -	- - -	249	1.00	209	0.84	182	0.73	- - -	- - -	201	0.81
4955	10 500	- - -	- - -	- - -	- - -	- - -	- - -	274	1.10	229	0.92	199	0.80	- - -	- - -	221	0.89
5190	11 000	- - -	- - -	- - -	- - -	- - -	- - -	301	1.21	251	1.01	219	0.88	- - -	- - -	239	0.96

CEILING DIFFUSER AIR THROW DATA

Model No.	Air Volume		[1] Effective Throw Range			
	L/s	cfm	RTD11-185S Step-Down		FD11-185S Flush	
			m	ft.	m	ft.
180	2645	5600	12 - 15	39 - 49	9 - 11	28 - 37
	2735	5800	13 - 16	42 - 51	9 - 12	29 - 38
	2830	6000	13 - 16	44 - 54	12 - 15	40 - 50
	2925	6200	14 - 17	45 - 55	13 - 16	42 - 51
	3020	6400	14 - 17	46 - 55	13 - 16	43 - 52
	3115	6600	14 - 17	47 - 56	14 - 17	45 - 56

[1] Throw is the horizontal or vertical distance an airstream travels on leaving the outletor diffuser before the maximum velocity is reduced to 15 m (50 ft.) per minute. Four sides open.

Model No.	Air Volume		[1] Effective Throw Range			
	L/s	cfm	RTD11-185S Step-Down		FD11-185S Flush	
			m	ft.	m	ft.
240	3400	7200	10 - 12	33 - 38	8 - 11	26 - 35
	3490	7400	11 - 12	35 - 40	9 - 11	28 - 37
	3585	7600	11 - 12	36 - 41	9 - 11	29 - 38
	3680	7800	12 - 13	38 - 43	12 - 15	40 - 50
	3775	8000	12 - 13	39 - 44	13 - 16	42 - 51
	3870	8200	12 - 14	41 - 46	13 - 16	43 - 52
	3965	8400	13 - 15	43 - 49	13 - 16	44 - 54
	4060	8600	13 - 15	44 - 50	14 - 17	46 - 57
	4155	8800	14 - 17	47 - 55	15 - 18	48 - 59

ELECTRICAL/ELECTRIC HEAT DATA

		KHA180S4			KHA240S4		
[1] Voltage - 50hz 3 Phase		380/420V			380/420V		
Compressor 1	Rated Load Amps	12.2			16.7		
	Locked Rotor Amps	101			111		
Compressor 2	Rated Load Amps	12.2			16.7		
	Locked Rotor Amps	101			111		
Outdoor Fan Motors	Number of motors	4			4		
	Full Load Amps	1.3			1.3		
	(total)	(5.2)			(5.2)		
Power Exhaust With (2) 0.25 kW	Full Load Amps	1.3			1.3		
	(total)	(2.6)			(2.6)		
Indoor Blower Motor	kW	2.2	3.7	5.6	3.7	5.6	7.5
	Full Load Amps	5.3	8.2	11.7	8.2	11.7	16.3
[1] Maximum Overcurrent Protection	Unit Only	50	50	50	60	70	70
	With (2) 0.25 kW Power Exhaust	50	50	50	70	70	70
[2] Minimum Circuit Ampacity	Unit Only	38	41	45	51	55	60
	With (2) 0.25 kW Power Exhaust	41	44	47	54	58	62

ELECTRIC HEAT DATA

	Electric Heat Voltage		420	420	420	420	420	420
[1] Maximum Overcurrent Protection	Unit+ [3] Electric Heat	11.5 kW	60	70	70	80	80	90
		23 kW	80	90	90	100	100	100
		34.5 kW	100	110	110	125	125	125
		45.9 kW	110	110	110	125	125	125
		68.9 kW	- - -	- - -	- - -	150	150	175
[2] Minimum Circuit Ampacity	Unit+ [3] Electric Heat	11.5 kW	58	61	65	71	75	79
		23 kW	78	81	84	91	94	99
		34.5 kW	98	101	104	111	114	119
		45.9 kW	102	104	108	115	118	123
		68.9 kW	- - -	- - -	- - -	146	150	154
[1] Maximum Overcurrent Protection	Unit+ [3] Electric Heat and (2) 0.25 kW Power Exhaust	11.5 kW	70	70	70	80	80	90
		23 kW	90	90	90	100	100	110
		34.5 kW	100	110	110	125	125	125
		45.9 kW	110	110	125	125	125	125
		68.9 kW	- - -	- - -	- - -	150	175	175
[2] Minimum Circuit Ampacity	Unit+ [3] Electric Heat and (2) 0.25 kW Power Exhaust	11.5 kW	61	64	67	74	77	82
		23 kW	81	83	87	94	97	102
		34.5 kW	100	103	107	113	117	121
		45.9 kW	104	107	111	117	121	125
		68.9 kW	- - -	- - -	- - -	149	152	157

NOTE - Extremes of operating range are plus and minus 10% of line voltage.

[1] Heating / Air Conditioning / Refrigeration (HACR) type breaker or fuse.

[2] Refer to local codes to determine wire, fuse and disconnect size requirements.

[3] Nominal kW based on 420V-3ph-50hz.

ELECTRIC HEAT CAPACITIES

Volts Input	11.5 kW			23 kW			34.5 kW			45.9 kW			68.9 kW		
	kW Input	Btuh Output	No. of Stages	kW Input	Btuh Output	No. of Stages	kW Input	Btuh Output	No. of Stages	kW Input	Btuh Output	No. of Stages	kW Input	Btuh Output	No. of Stages
380	9.4	32 100	1	18.8	64 200	1	28.2	96 300	2	37.6	128 400	2	56.4	192 500	2
400	10.4	35 600	1	20.8	71 100	1	31.2	106 700	2	41.6	142 200	2	62.5	213 200	2
420	11.5	39 200	1	23.0	78 400	1	34.4	117 600	2	45.9	156 800	2	68.9	235 100	2

UNIT CLEARANCES

Unit With Economizer

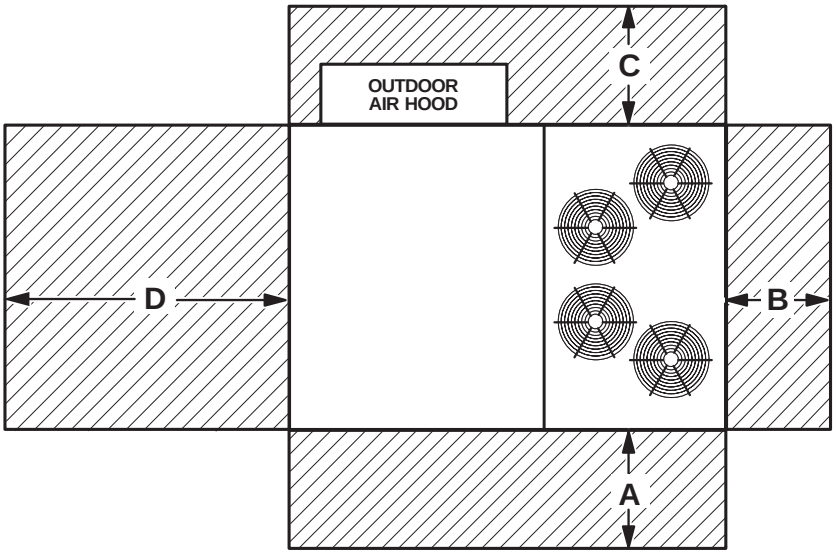

[1] Unit Clearance	A		B		C		D		Top Clearance
	mm	in.	mm	in.	mm	in.	mm	in.	
Service Clearance	1524	60	914	36	914	36	1676	66	Unobstructed
Minimum Operation Clearance	1143	45	914	36	914	36	1041	41	

NOTE - Entire perimeter of unit base requires support when elevated above the mounting surface.

[1] Service Clearance - Required for removal of serviceable parts.

Minimum Operation Clearance - Required clearance for proper unit operation.

OUTDOOR SOUND DATA

Unit Model Number	Octave Band Sound Power Levels dBA, re 10^{-12} Watts Center Frequency - HZ							[1] Sound Rating Number (dBA)
	125	250	500	1000	2000	4000	8000	
KHA180 Cooling	75	81	87	89	86	81	69	93
KHA180 Heating	76	81	87	89	87	81	70	93
KHA240 Cooling	77	81	87	89	86	80	67	93
KHA240 Heating	78	81	88	89	87	81	67	93

Note - The octave sound power data does not include tonal corrections.

[1] Sound Rating Number according to AHRI Standard 370-2001.

OPTIONAL CONVENTIONAL TEMPERATURE CONTROL SYSTEMS

Item		Model No.	Catalog No.
7-DAY PROGRAMMABLE THERMOSTAT - BACNET COMPATIBLE WITH REHEAT FUNCTION			
	• For units with or without [1] Humiditrol® • BTL listed MS/TP ensures compatibility with any BACnet system • Built-in control programs for conventional and heat pump applications • Conventional systems up to 3-stage heat and 3-stage cool • Heat pumps with 1 or 2 compressors and up to 2-stage auxiliary heat • On-board temperature and humidity sensor • Multiple configurable inputs and outputs enable advanced control strategies • Set-up Wizard enables rapid system configuration • No special tools required for installation or commissioning • Seven-day (2, 4 or 6 event) occupancy scheduling per day • Backlit 5-inch LCD touchscreen	- - -	**Y8241**

[1] BACnet Thermostat (**Y8241**) will control units with and without the Humiditrol® option. If there is a mix of units equipped with and without Humiditrol on the same site, this thermostat can be used for all units if desired.

BACnet Controls (no reheat capability)	BACnet® Module (factory or field installed)	K0CTRL31B-2	**16X71**
	BACnet® Room Sensor with Display (field installed)	K0SNSR01FF1	**97W23**
	BACnet® Room Sensor without Display (field installed)	K0SNSR00FF1	**97W24**
Optional Accessories	Plenum Cable (RJ45/CAT5 75 ft.)	K0MISC00FF1	**97W25**

WEIGHT DATA

Model Number	Net		Shipping	
	kg	lbs.	kg	lbs.
180 Base Unit	885	1950	975	2150
180 Max. Unit	1030	2270	1120	2470
240 Base Unit	975	2150	1066	2350
240 Max. Unit	1125	2480	1216	2680

OPTIONS / ACCESSORIES

Description	Shipping Weight	
	kg	lbs.
ECONOMIZER / OUTDOOR AIR / EXHAUST		
Economizer		
Economizer Dampers	46	102
Barometric Relief Dampers (downflow)	14	30
Barometric Relief Dampers (horizontal)	9	20
Outdoor Air Damper Hood (downflow)	29	65
Outdoor Air Dampers		
Outdoor Air Damper Section (downflow) - Automatic (including Hood)	39	18
Outdoor Air Damper Section (downflow) - Manual (including Hood)	22	10
Power Exhaust	28	62
ELECTRIC HEAT		
11.5 kW	27	59
23 kW	27	59
34.5 kW	34	76
45.9 kW	34	76
68.9 kW	38	84
ROOF CURBS		
Hybrid Roof Curbs, Downflow		
203 mm height	34	75
356 mm height	48	105
457 mm height	57	125
610 mm height	70	155
Adjustable Pitch Curb		
356 mm height	32	191
Horizontal Roof Curbs, Standard		
660 mm height	231	470
940 mm height	229	505
CEILING DIFFUSERS		
Step-Down		
RTD11-185S	168	76
RTD11-275S	238	108
Flush		
FD11-185S	168	76
FD11-275S	238	108
Transitions		
C1DIFF33C-1	36	80
C1DIFF34C-1	34	75
PACKAGING		
LTL Packaging (less than truck load)	141	310

CORNER WEIGHTS									CENTER OF GRAVITY			
Model No.	AA		BB		CC		DD		EE		FF	
	kg	lbs.	kg	lbs.	kg	lbs.	kg	lbs.	mm	in.	mm	in.
KHA180 Base Unit	182	385	220	466	284	602	235	497	1499	59	1010	39-3/4
KHA180 Max. Unit	232	492	258	548	306	648	275	582	1441	56-3/4	1060	41-3/4
KHA240 Base Unit	199	423	235	497	314	665	267	565	1480	58-1/4	991	39
KHA240 Max. Unit	253	536	274	580	335	709	309	655	1422	56	1041	41

Base Unit - The unit with NO INTERNAL OPTIONS.

Max. Unit - The unit with ALL INTERNAL OPTIONS Installed. (Economizer, Standard Static Power Exhaust Fans, Controls, etc.). Does not include accessories external to unit or high static power exhaust.

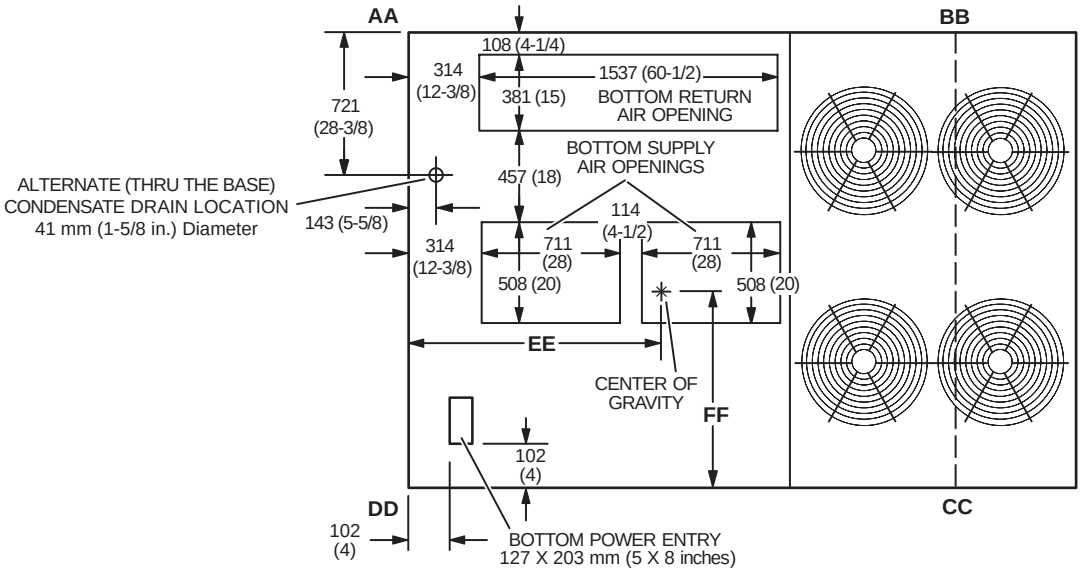

TOP VIEW

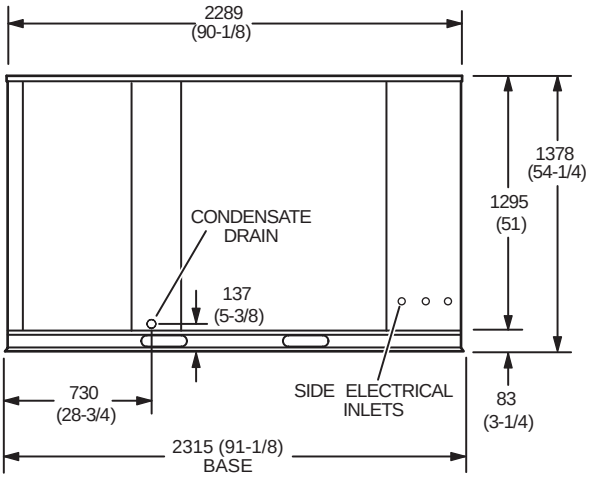

END VIEW

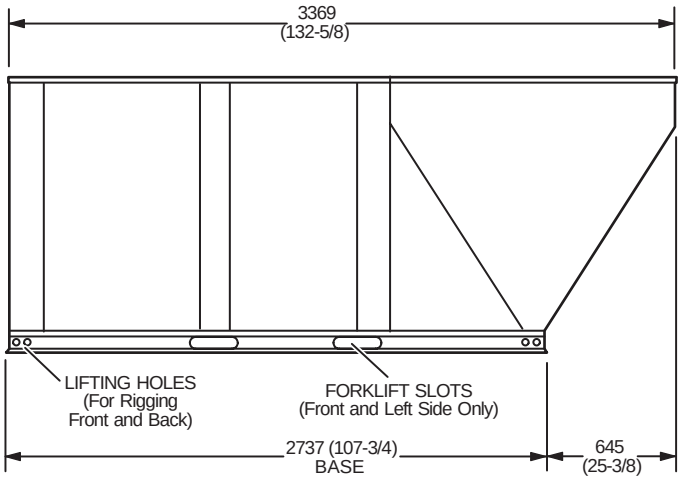

SIDE VIEW

OUTDOOR AIR HOOD DETAIL

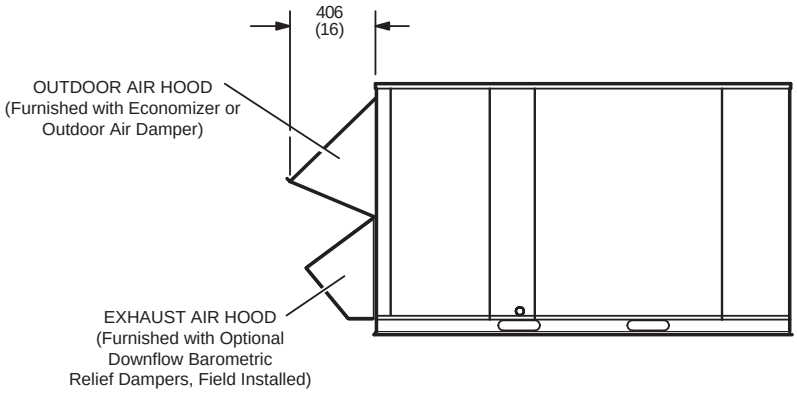

OPTIONAL HORIZONTAL BAROMETRIC RELIEF DAMPERS WITH HOOD

(Field installed in horizontal return air duct adjacent to unit)

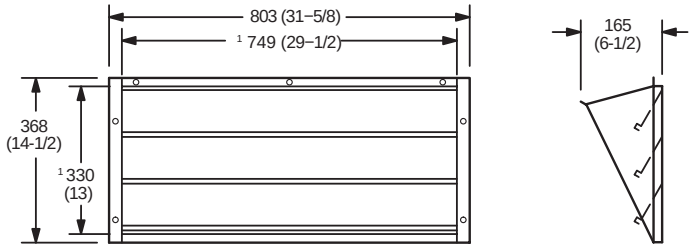

FRONT VIEW **SIDE VIEW**

NOTE − Two furnished per order number.
[1] NOTE − Opening size required in return air duct.

HYBRID ROOF CURBS - DOUBLE DUCT OPENING

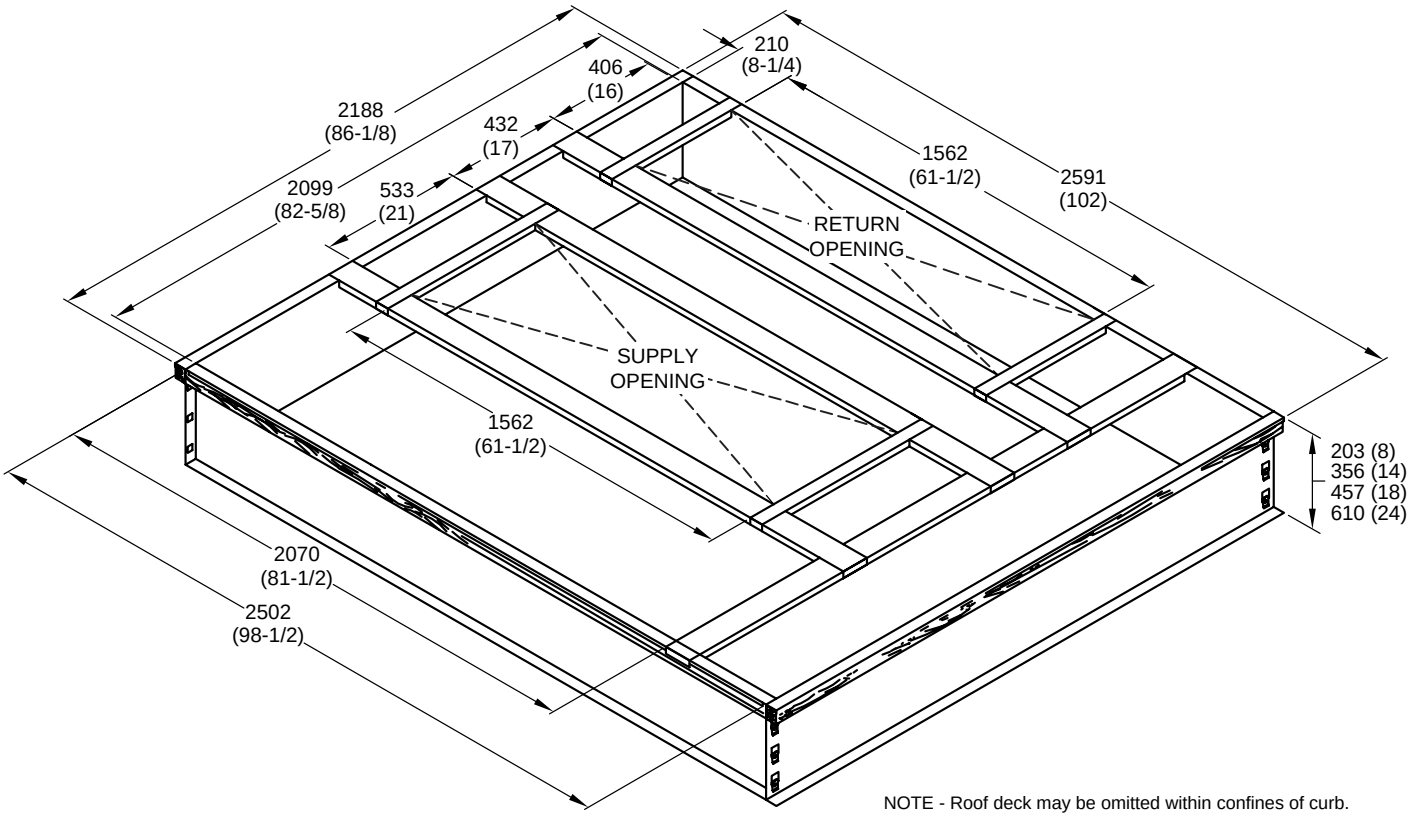

NOTE - Roof deck may be omitted within confines of curb.

TYPICAL FLASHING DETAIL FOR ROOF CURB

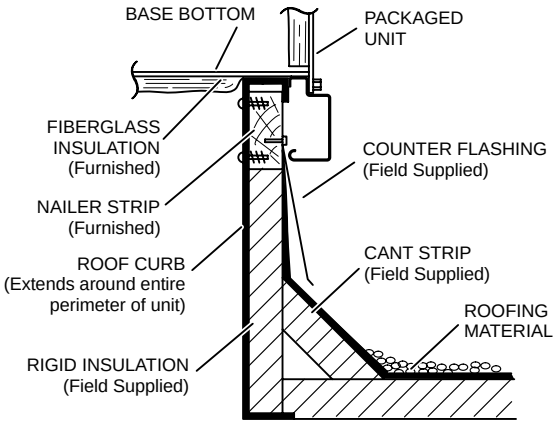

DETAIL ROOF CURB

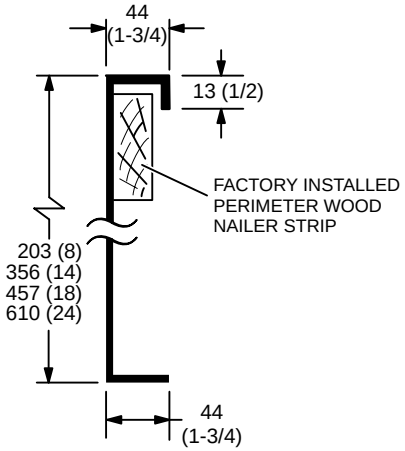

ADJUSTABLE PITCH CURB - DOUBLE DUCT OPENING

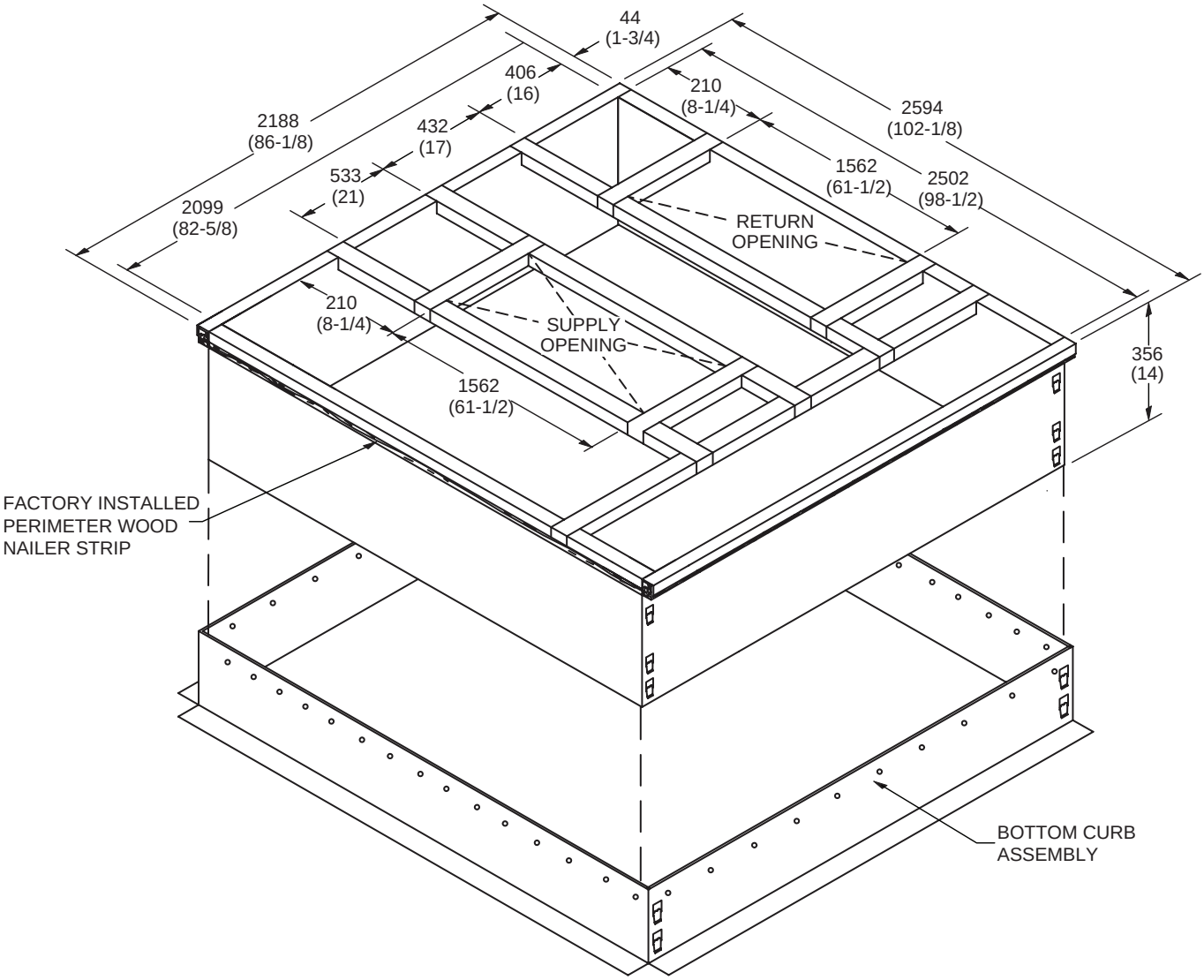

NOTE - Maximum slope pitch is 19 mm per 305 mm (3/4 inch per foot) in any one direction.

TYPICAL FLASHING DETAIL FOR ROOF CURB

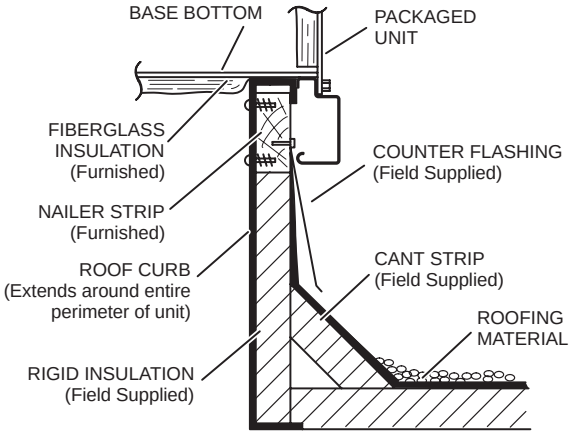

DETAIL ROOF CURB

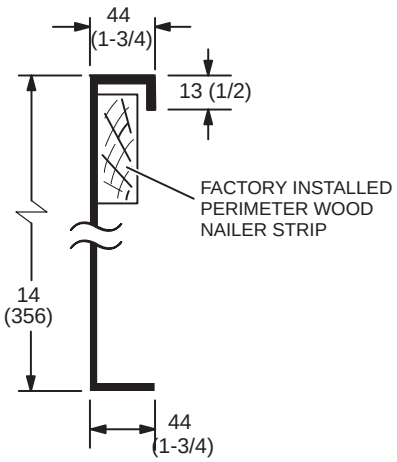

ROOF CURBS WITH SUPPLY & RETURN AIR TRANSITIONS FOR CEILING DIFFUSERS

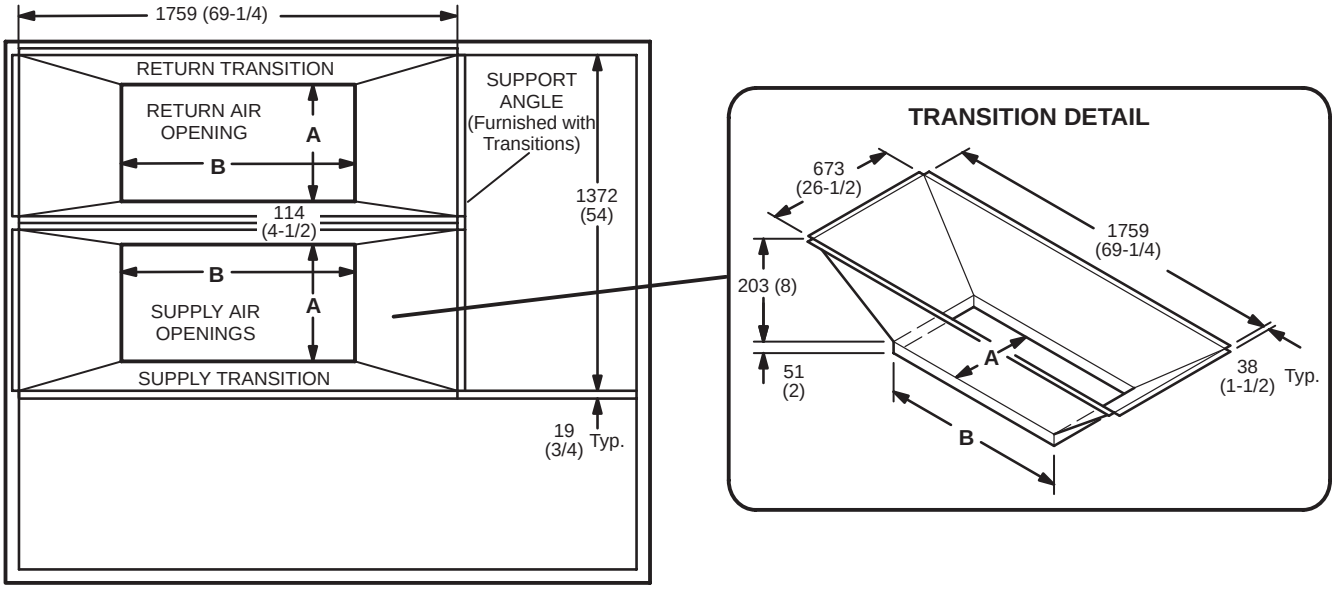

TOP VIEW

TRANSITION OPENING SIZES

Model Number	A		B	
	mm	inch	mm	inch
C1DIFF33C-1	457	18	914	36
C1DIFF34C-1	610	24	1219	48

HORIZONTAL ROOF CURBS − Requires Optional Horizontal Return Air Panel Kit

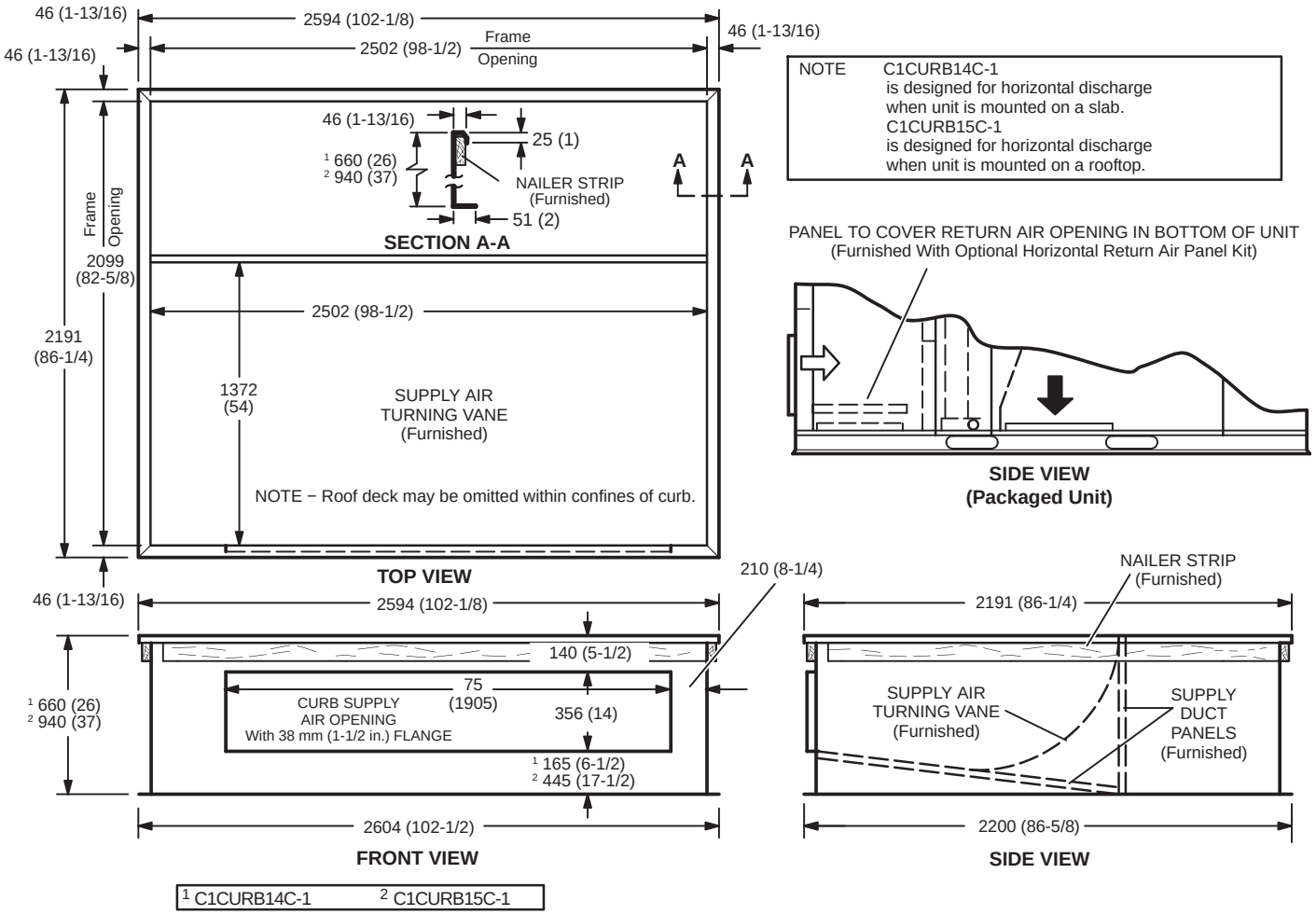

HORIZONTAL SUPPLY AND RETURN AIR OPENINGS WITH HORIZONTAL ROOF CURB

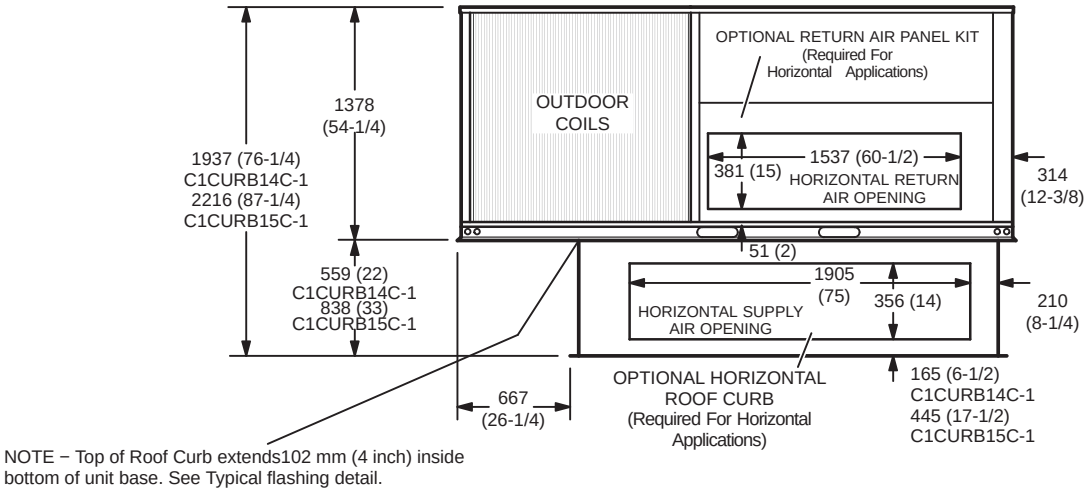

COMBINATION CEILING SUPPLY AND RETURN DIFFUSERS

STEP-DOWN CEILING DIFFUSER

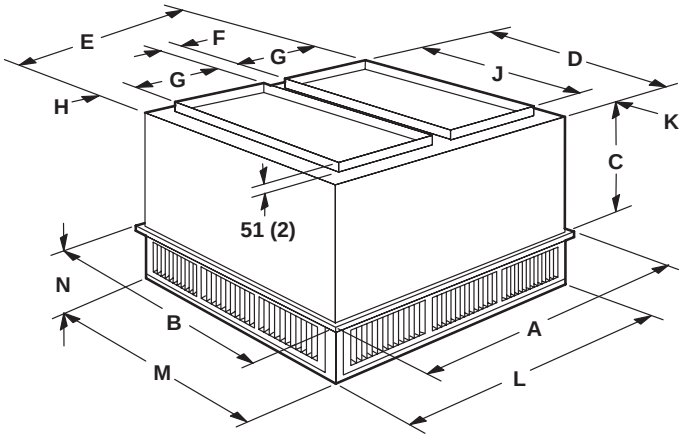

Model Number		RTD11-185S	RTD11-275S
A	mm	1210	1514
	in.	47-5/8	59-5/8
B	mm	1210	1514
	in.	47-5/8	59-5/8
C	mm	625	778
	in.	24-5/8	30-5/8
D	mm	1156	1461
	in.	45-1/2	57-1/2
E	mm	1156	1461
	in.	45-1/2	57-1/2
F	mm	114	114
	in.	4-1/2	4-1/2
G	mm	457	610
	in.	18	24
H	mm	64	64
	in.	2-1/2	2-1/2
J	mm	914	1219
	in.	36	48
K	mm	121	121
	in.	4-3/4	4-3/4
L	mm	1156	1461
	in.	45-1/2	57-1/2
M	mm	1156	1461
	in.	45-1/2	57-1/2
N	mm	257	283
	in.	10-1/8	11-1/8
Duct Size	mm	457 x 914	610 x 1219
	in.	18 x 36	24 x 48

FLUSH CEILING DIFFUSER

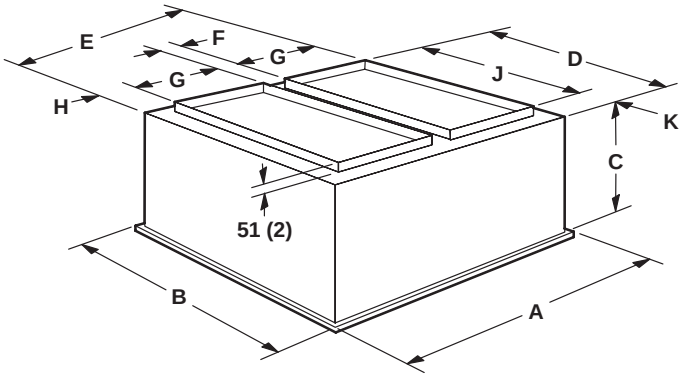

Model Number		FD11-185S	FD11-275S
A	mm	1210	1514
	in.	47-5/8	59-5/8
B	mm	1210	1514
	in.	47-5/8	59-5/8
C	mm	743	895
	in.	29-1/4	35-1/4
D	mm	1143	1148
	in.	45	57
E	mm	1143	1448
	in.	45	57
F	mm	114	114
	in.	4-1/2	4-1/2
G	mm	457	610
	in.	18	24
H	mm	57	57
	in.	2-1/4	2-1/4
J	mm	914	1219
	in.	36	48
K	mm	114	114
	in.	4-1/2	4-1/2
Duct Size	mm	457 x 914	610 x 1219
	in.	18 x 36	24 x 48

REVISIONS

Section	Description
Options/Accessories	Removed Novar 2051 option.
Optional Conventional Temperature Control Systems	Added BACnet Thermostat, Controls and optional accessories.

Visit us at www.allied-commercial.com

For the latest technical information, visit us at www.allied-commercial.com

Contact us at 1-800-448-5872

NOTE - Due to Allied Commercial ongoing commitment to quality, Specifications, Ratings and Dimensions subject to change without notice and without incurring liability.
Improper installation, adjustment, alteration, service or maintenance can cause property damage or personal injury.
Installation and service must be performed by a qualified installer and servicing agency.

©2019 Allied Air Enterprises LLC, a Lennox International Inc. Company