25HNB6
Infinity® 16 2–Stage Heat Pump with Puron® Refrigerant 2 to 5 Nominal Tons

Carrier
turn to the experts

Wiring Diagram

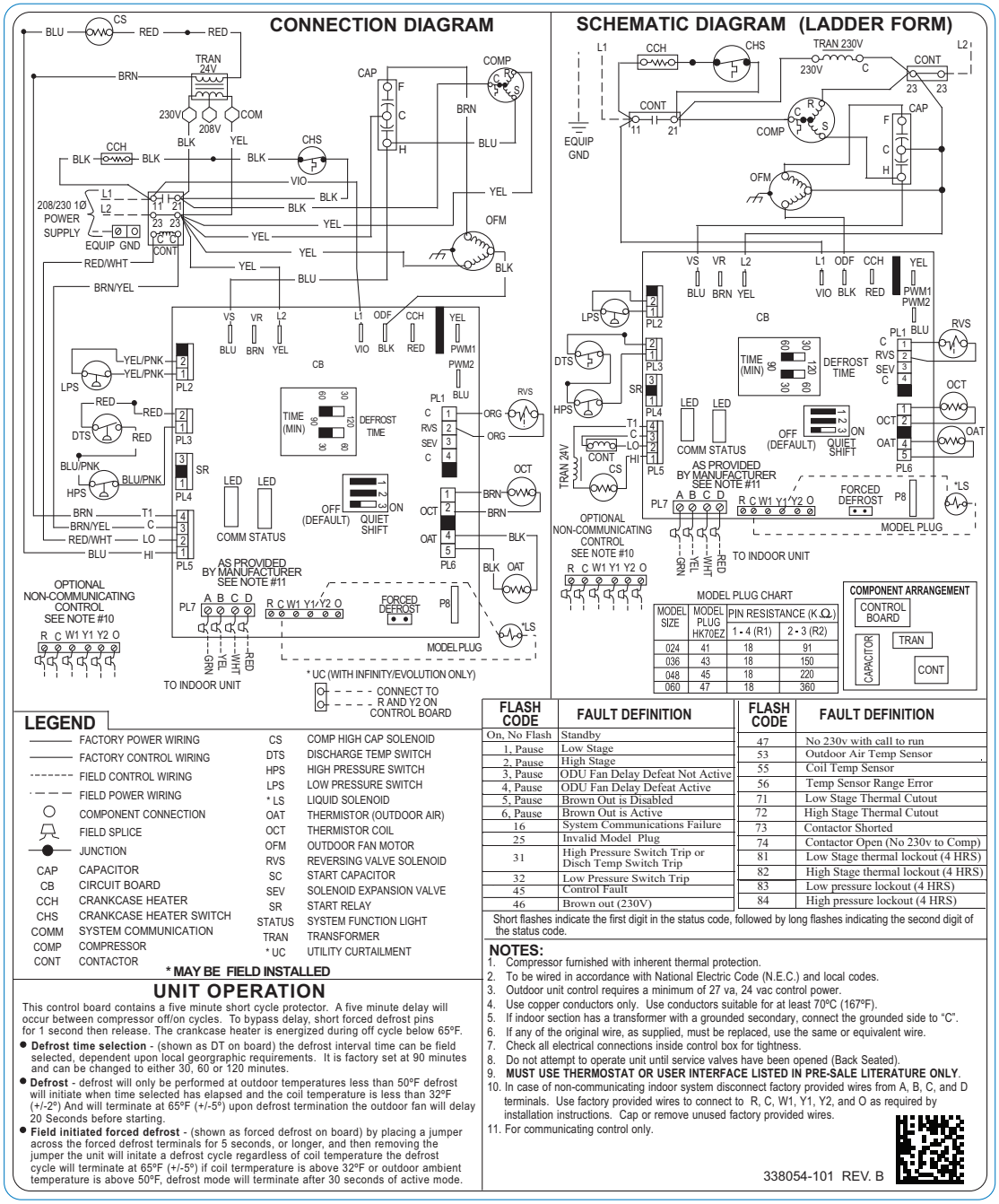

Fig. 1 – Wiring Diagram — Model sizes 2 - 5 tons, 208/230-1

Copyright 2012 Carrier Corp. • 7310 W. Morris St. • Indianapolis, IN 46231
Printed in U.S.A. Edition Date: 03/12 **Catalog No: 25HNB6−1W**

Manufacturer reserves the right to change, at any time, specifications and designs without notice and without obligations.

Replaces: New