289B (2 - 5 Ton)
EVOLUTION™ HEAT PUMP
WITH PURON® REFRIGERANT

bryant®

Wiring Diagram

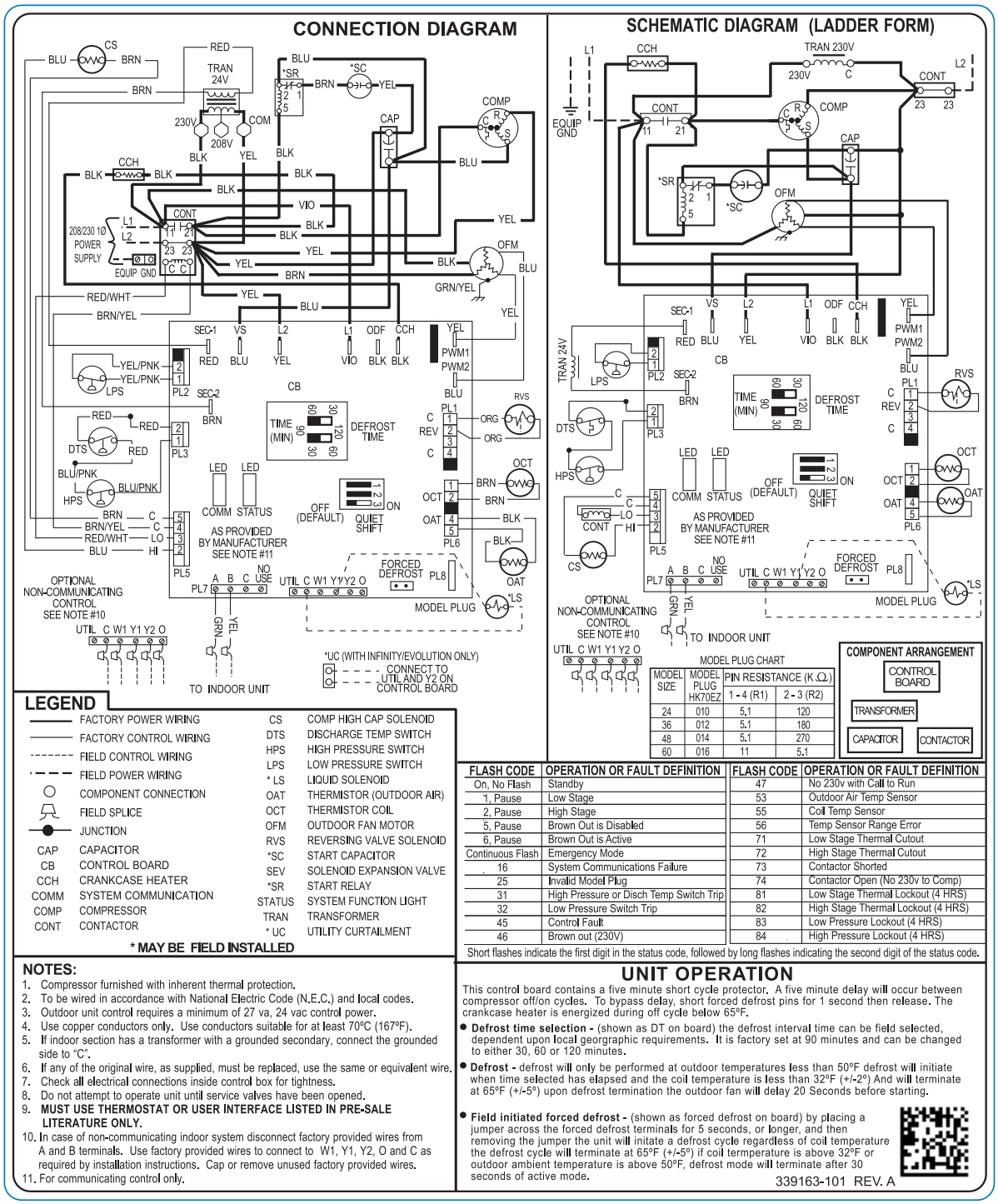

LEGEND

	FACTORY POWER WIRING	CS	COMP HIGH CAP SOLENOID
	FACTORY CONTROL WIRING	DTS	DISCHARGE TEMP SWITCH
	FIELD CONTROL WIRING	HPS	HIGH PRESSURE SWITCH
	FIELD POWER WIRING	LPS	LOW PRESSURE SWITCH
	COMPONENT CONNECTION	* LS	LIQUID SOLENOID
	FIELD SPLICE	OAT	THERMISTOR (OUTDOOR AIR)
	JUNCTION	OCT	THERMISTOR COIL
CAP	CAPACITOR	OFM	OUTDOOR FAN MOTOR
CB	CONTROL BOARD	RVS	REVERSING VALVE SOLENOID
CCH	CRANKCASE HEATER	*SC	START CAPACITOR
COMM	SYSTEM COMMUNICATION	SEV	SOLENOID EXPANSION VALVE
COMP	COMPRESSOR	*SR	START RELAY
CONT	CONTACTOR	STATUS	SYSTEM FUNCTION LIGHT
		TRAN	TRANSFORMER
		* UC	UTILITY CURTAILMENT

*** MAY BE FIELD INSTALLED**

FLASH CODE	OPERATION OR FAULT DEFINITION	FLASH CODE	OPERATION OR FAULT DEFINITION
On, No Flash	Standby	47	No 230v with Call to Run
1, Pause	Low Stage	53	Outdoor Air Temp Sensor
2, Pause	High Stage	55	Coil Temp Sensor
5, Pause	Brown Out is Disabled	56	Temp Sensor Range Error
6, Pause	Brown Out is Active	71	Low Stage Thermal Cutout
Continuous Flash	Emergency Mode	72	High Stage Thermal Cutout
16	System Communications Failure	73	Contactor Shorted
25	Invalid Model Plug	74	Contactor Open (No 230v to Comp)
31	High Pressure or Disch Temp Switch Trip	81	Low Stage Thermal Lockout (4 HRS)
32	Low Pressure Switch Trip	82	High Stage Thermal Lockout (4 HRS)
45	Control Fault	83	Low Pressure Lockout (4 HRS)
46	Brown out (230V)	84	High Pressure Lockout (4 HRS)

Short flashes indicate the first digit in the status code, followed by long flashes indicating the second digit of the status code.

NOTES:

1. Compressor furnished with inherent thermal protection.
2. To be wired in accordance with National Electric Code (N.E.C.) and local codes.
3. Outdoor unit control requires a minimum of 27 va, 24 vac control power.
4. Use copper conductors only. Use conductors suitable for at least 70°C (167°F).
5. If indoor section has a transformer with a grounded secondary, connect the grounded side to "C".
6. If any of the original wire, as supplied, must be replaced, use the same or equivalent wire.
7. Check all electrical connections inside control box for tightness.
8. Do not attempt to operate unit until service valves have been opened.
9. **MUST USE THERMOSTAT OR USER INTERFACE LISTED IN PRE-SALE LITERATURE ONLY.**
10. In case of non-communicating indoor system disconnect factory provided wires from A and B terminals. Use factory provided wires to connect to W1, Y1, Y2, O and C as required by installation instructions. Cap or remove unused factory provided wires.
11. For communicating control only.

UNIT OPERATION

This control board contains a five minute short cycle protector. A five minute delay will occur between compressor off/on cycles. To bypass delay, short forced defrost pins for 1 second then release. The crankcase heater is energized during off cycle below 65°F.

- **Defrost time selection -** (shown as DT on board) the defrost interval time can be field selected, dependent upon local georgraphic requirements. It is factory set at 90 minutes and can be changed to either 30, 60 or 120 minutes.
- **Defrost -** defrost will only be performed at outdoor temperatures less than 50°F defrost will initiate when time selected has elapsed and the coil temperature is less than 32°F (+/-2°) And will terminate at 65°F (+/-5°) upon defrost termination the outdoor fan will delay 20 Seconds before starting.
- **Field initiated forced defrost -** (shown as forced defrost on board) by placing a jumper across the forced defrost terminals for 5 seconds, or longer, and then removing the jumper the unit will initate a defrost cycle regardless of coil temperature the defrost cycle will terminate at 65°F (+/-5°) if coil termperature is above 32°F or outdoor ambient temperature is above 50°F, defrost mode will terminate after 30 seconds of active mode.

Fig. 1 – Wiring Diagram — Model sizes 2 - 5 tons, 208/230-1

©Bryant Heating & Cooling Systems 7310 W. Morris St. Indianapolis, IN 46231
Edition Date: 03/13

Catalog No. WD289B−04

Manufacturer reserves the right to discontinue, or change at any time, specifications or designs without notice and without incurring obligations.

Replaces: WD289B−03