C32 ACERT® MARINE PROPULSION

1470-1925 mhp
(1450-1900 bhp)
1081-1417 bkW

Engines for Pleasure Craft Applications

C32 ACERT® Heat Exchanger Cooled

Image shown may not reflect actual engine

MPD Display

SPECIFICATIONS

V-12, 4-Stroke-Cycle-Diesel

Emissions . . . . . EPA Tier 2, IMO, and EU Stage IIIA compliant
Displacement . . . . . 32.2 L (1958.8 in^3)
Rated Engine Speed 1600-2300
Bore. . . . . 145 mm (5.7 in.)
Stroke . . . . . 162 mm (6.4 in.)
Aspiration. . . . . Twin Turbocharged-Aftercooled
Governor . . . . . Electronic
Cooling System . . . . . Heat Exchanger
Weight, Net Dry (approx.)
  without gear. . . . . 2994-3152 kg (6602-6949 lb)
Refill Capacity (HEX package)
  Cooling System
    (engine & heat exchanger) . . . . . 79 L (20.9 gal)
  Lube Oil System (refill) . . . . . 85.2 L (22.5 gal)
Oil Change Interval. . . . . 250 hr
  Caterpillar Diesel Engine Oil 10W30 or 15W40
Rotation (from flywheel end). . . . . Counterclockwise
Flywheel and flywheel housing
  1800 bhp, 1900 bhp. . . . . SAE No. 0
  1450 bhp, 1600 bhp, 1700 bhp . . . . . SAE No. 1
Flywheel Teeth
  1800 bhp, 1900 bhp. . . . . 136 teeth
  1450 bhp, 1600 bhp, 1700 bhp . . . . . 113 teeth

C-Ratings
1470 mhp (1450 bhp) 1081 bkW @ 2300 rpm (WOSR)

D-Rating
1622 mhp (1600 bhp) 1193 bkW @ 2300 rpm (WOSR)

E-Ratings
1723 mhp (1700 bhp) 1267 bkW @ 2300 rpm (WOSR)
1825 mhp (1800 bhp) 1342 bkW @ 2300 rpm
1925 mhp (1900 bhp) 1417 bkW @ 2300 rpm

STANDARD ENGINE EQUIPMENT

Air Inlet System
Aftercooler — sea water/separate circuit, corrosion resistant (air side); air cleaner/fumes disposal (closed system) with service indicator (shipped loose); turbocharger inlet, 152 mm (6 in.) OD straight connection

Control System
Electronic governor, A4 Electronic Control Unit (ECU); cold mode start strategy; programmable low idle; electronic diagnostics and fault logging; engine and transmission monitoring (speed, temperature, pressure); fuel/air ratio control; momentary start/stop logic, ECU controlled engine pre-lube and cranking, ECU controlled engine cool-down; high temperature braided engine harness with 70-pin customer connector and service tool connector

Cooling System
Oil cooler; jacket water pump, gear-driven, centrifugal; sea water/auxiliary pump, gear-driven, rubber impeller; sea water/auxiliary pump, gear-driven, bronze impeller; heat exchanger — titanium plate with integral expansion tank and thermostat housing (fully open temperature 92° C), integral fuel cooler; coolant recovery system

Exhaust System
Manifold, watercooled, 1800 and 1900 hp engine — twin turbocharger with watercooled bearings and heat shield, 123 mm (4.8 in.) full marmon connection outlet; 1450, 1600, and 1700 engine — twin turbocharger, watercooled housing, 130 mm (5.12 in.) ID round flanged outlet

Flywheels and Flywheel Housings
1800 and 1900 hp engine — flywheel, SAE No. 0, 136 teeth, flywheel housing, SAE No. 0; 1450, 1600, and 1700 engine — flywheel, SAE No. 1, 113 teeth, flywheel housing, SAE No. 1, SAE standard rotation

Fuel System
Fuel filter, RH service on port, LH service on starboard (fuel connections size: ORFS -10 inlet, ORFS -8 outlet); fuel transfer pump; fuel priming pump

Instrumentation
Graphical unit (Marine Power Display or Marine Analog Power Display) for analog or digital display of engine oil pressure/temperature, engine jacket water temperature, fuel pressure/temperature, transmission pressure/temperature, engine speed, engine hours, system DC voltage, resistible trip parameters, instantaneus fuel consumption, total fuel consumed, alarm horn, percent load, boost pressure; internal override and control switches — local/remote throttle, torque limit override, protection override, pre-lube override, crank override; 24-pin customer connector (for use with remote panel); local keyswitch for power on/off; start/stop buttons; local stop button; backup ECU ready light; backup ECU active light; overspeed shutdown notification light; remote stop notification light

Lube System
Crankcase breather; oil filter — spin-on RH service on port, LH service on starboard; oil pan, center sump; shallow sump pan (250-hour oil change interval); oil filler and dipstick, RH service on port, LH service on starboard; oil pump, gear-driven

Mounting System
Front support — adjustable

Protection System
A4 ECU electronic monitoring system provides customer programmable engine derate strategies to protect against adverse operating conditions; remote stop pusbutton (located on electronic instrument panel)

General
Crankshaft vibration damper; lifting eyes; RH or LH service options; literature; side access block; single groove V-belt crankshaft pulley (1800 and 1900 ratings); dual groove V-belt crankshaft pulley (1450, 1600, and 1700 ratings)

ISO Certification
Factory-designed systems built at Caterpillar ISO 9001:2000 certified facilities.

C32 DITA ACERT Performance Data

1470 mhp (1450 bhp) 1081 bkW @ 2300 rpm

IMO/EPA Tier 2 Compliant

C Rating — EM0048-00

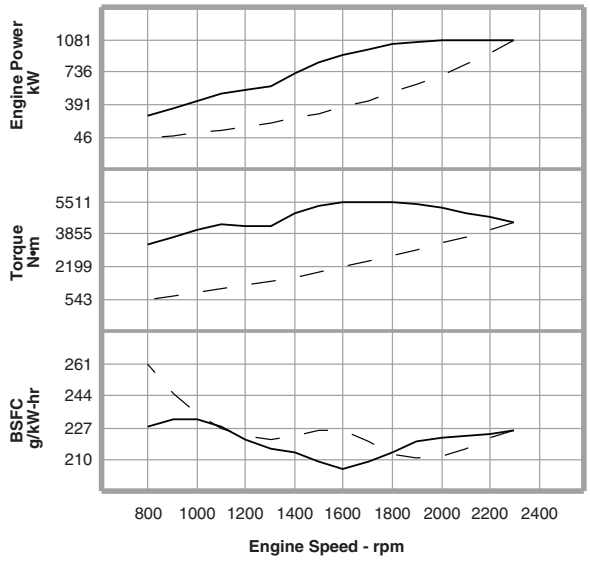

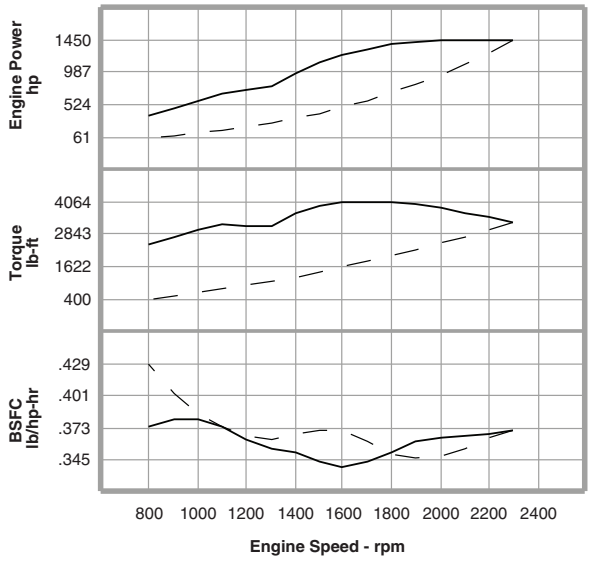

Metric | Maximum Power — | Prop Demand - - | **1081 kW**

Performance Data

	Engine Speed rpm	Engine Power kW	Engine Torque N•m	BSFC g/kW-hr	Fuel Rate L/hr
Maximum Power Data	2300	1081.0	4488	225.6	290.7
	2200	1081.0	4692	224.2	288.9
	2100	1081.0	4916	222.9	287.2
	1900	1066.0	5358	219.0	278.3
	1800	1028.0	5454	213.4	261.5
	1600	922.0	5503	205.2	225.5
	1500	839.0	5341	208.9	208.9
	1300	581.0	4268	215.5	149.2
	1100	501.0	4349	227.6	135.9
	900	349.0	3703	231.6	96.4
	800	276.0	3295	228.0	75.0
Prop Demand Data	2300	1081.0	4488	225.6	290.7
	2200	946.0	4106	221.5	249.8
	2100	822.8	3742	215.3	211.2
	1900	609.4	3063	210.4	152.8
	1800	518.2	2749	212.1	131.0
	1600	363.9	2172	225.9	98.0
	1500	299.9	1909	226.0	80.8
	1300	195.2	1434	220.4	51.3
	1100	118.3	1027	227.4	32.1
	900	64.8	687	245.4	18.9
	800	45.5	543	261.2	14.2

Cubic prop demand curve with 3.0 exponent for displacement hulls only.

English | Maximum Power — | Prop Demand - - | **1450 hp**

Performance Data

	Engine Speed rpm	Engine Power hp	Engine Torque lb-ft	BSFC lb/hp-hr	Fuel Rate gph
Maximum Power Data	2300	1449.6	3310	.371	76.8
	2200	1449.6	3460	.369	76.3
	2100	1449.6	3626	.366	75.9
	1900	1429.5	3952	.360	73.5
	1800	1378.6	4022	.351	69.1
	1600	1236.4	4059	.337	59.6
	1500	1125.1	3939	.343	55.2
	1300	779.1	3148	.354	39.4
	1100	671.9	3207	.374	35.9
	900	468.0	2731	.381	25.5
	800	370.1	2430	.375	19.8
Prop Demand Data	2300	1449.6	3310	.371	76.8
	2200	1268.6	3028	.364	66.0
	2100	1103.4	2760	.354	55.8
	1900	817.2	2259	.346	40.4
	1800	694.9	2027	.349	34.6
	1600	488.0	1602	.371	25.9
	1500	402.2	1408	.372	21.3
	1300	261.8	1058	.362	13.6
	1100	158.6	757	.374	8.5
	900	86.9	507	.403	5.0
	800	61.0	400	.429	3.8

Power produced at the flywheel will be within standard tolerances up to 50°C (122°F) combustion air temperature measured at the air cleaner inlet, and fuel temperature up to 52°C (125°F) measured at the fuel filter base. Power rated in accordance with NMMA procedure as crankshaft power. Reduce crankshaft power by 3% for propeller shaft power.

© 2009 Caterpillar All Rights Reserved

C32 DITA ACERT Performance Data

1622 mhp (1600 bhp) 1193 bkW @ 2300 rpm

IMO/EPA Tier 2 Compliant

D Rating — EM0047-00

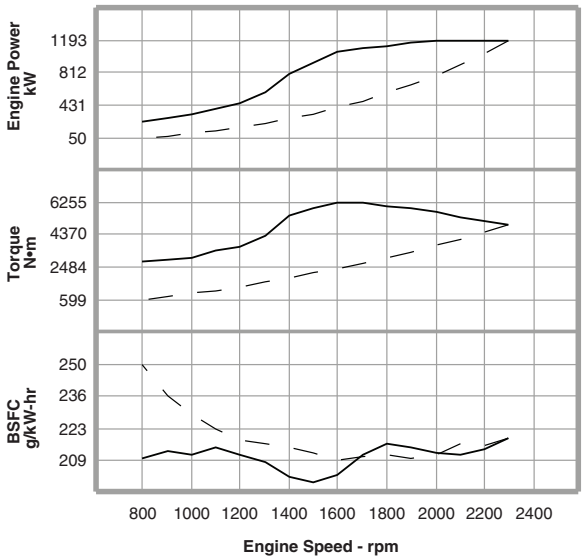

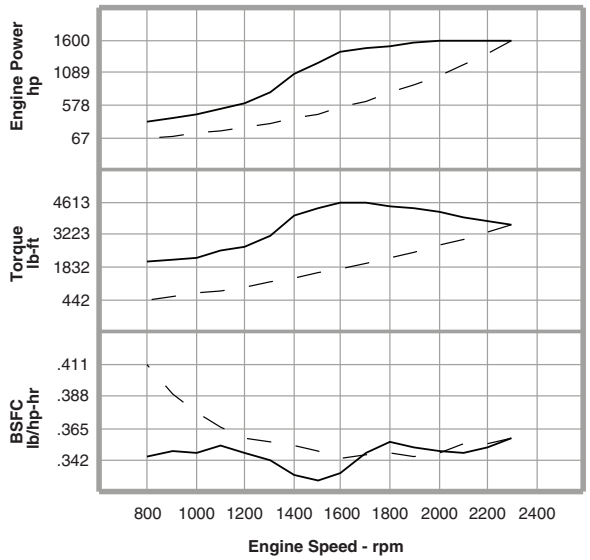

Metric | Maximum Power — | Prop Demand — — | **1193 kW**

Performance Data

	Engine Speed rpm	Engine Power kW	Engine Torque N•m	BSFC g/kW-hr	Fuel Rate L/hr
Maximum Power Data	2300	1193.0	4953	218.3	310.5
	2200	1193.0	5178	213.5	303.6
	2100	1193.0	5425	211.2	300.3
	1900	1165.0	5855	213.6	296.7
	1800	1132.0	6005	215.6	290.9
	1600	1048.0	6255	201.9	252.2
	1500	924.0	5882	199.2	219.4
	1300	581.0	4268	207.3	143.6
	1100	397.0	3446	213.9	101.2
	900	279.0	2960	212.0	70.5
	800	237.0	2829	209.3	59.1
Prop Demand Data	2300	1193.0	4953	218.3	310.5
	2200	1044.1	4532	214.7	267.2
	2100	908.1	4129	215.2	232.9
	1900	672.5	3380	209.2	167.8
	1800	571.8	3034	210.8	143.7
	1600	401.6	2397	208.8	100.0
	1500	330.9	2107	211.3	83.4
	1300	215.4	1582	215.9	55.4
	1100	130.5	1133	222.5	34.6
	900	71.5	758	237.0	20.2
	800	50.2	599	250.0	15.0

Cubic prop demand curve with 3.0 exponent for displacement hulls only.

English | Maximum Power — | Prop Demand — — | **1600 hp**

Performance Data

	Engine Speed rpm	Engine Power hp	Engine Torque lb-ft	BSFC lb/hp-hr	Fuel Rate gph
Maximum Power Data	2300	1599.8	3653	.359	82.0
	2200	1599.8	3819	.351	80.2
	2100	1599.8	4001	.347	79.3
	1900	1562.3	4318	.351	78.4
	1800	1518.0	4429	.354	76.8
	1600	1405.4	4613	.332	66.6
	1500	1239.1	4338	.327	58.0
	1300	779.1	3148	.341	37.9
	1100	532.4	2541	.352	26.7
	900	374.1	2183	.349	18.6
	800	317.8	2086	.344	15.6
Prop Demand Data	2300	1599.8	3653	.359	82.0
	2200	1400.2	3342	.353	70.6
	2100	1217.8	3045	.354	61.5
	1900	901.8	2493	.344	44.3
	1800	766.8	2238	.347	38.0
	1600	538.6	1768	.343	26.4
	1500	443.7	1554	.347	22.0
	1300	288.9	1167	.355	14.6
	1100	175.0	836	.366	9.1
	900	95.9	559	.390	5.3
	800	67.3	442	.411	4.0

Power produced at the flywheel will be within standard tolerances up to 50°C (122°F) combustion air temperature measured at the air cleaner inlet, and fuel temperature up to 52°C (125°F) measured at the fuel filter base. Power rated in accordance with NMMA procedure as crankshaft power. Reduce crankshaft power by 3% for propeller shaft power.

© 2009 Caterpillar All Rights Reserved

C32 DITA ACERT Performance Data

1723 mhp (1700 bhp) 1267 bkW @ 2300 rpm

IMO/EPA Tier 2 Compliant

E Rating — EM0029-00

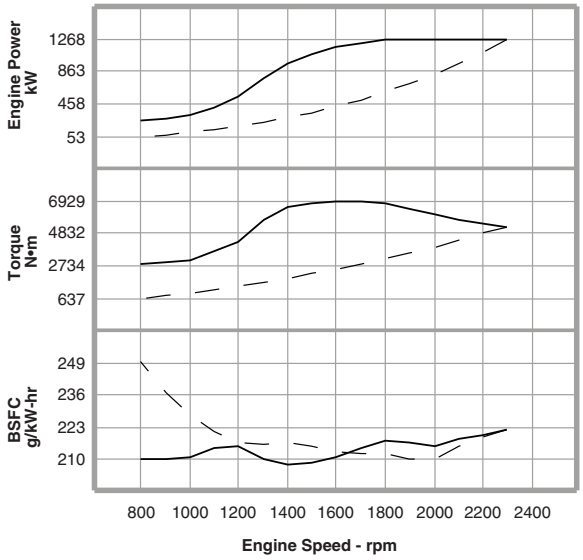

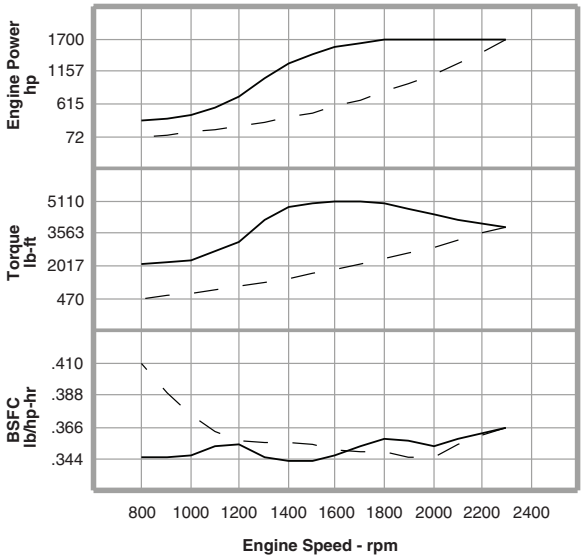

Metric | Maximum Power — | Prop Demand — — | **1268 kW**

Performance Data

	Engine Speed rpm	Engine Power kW	Engine Torque N•m	BSFC g/kW-hr	Fuel Rate L/hr
Maximum Power Data	2300	1268.0	5265	222.5	336.3
	2200	1268.0	5504	220.3	333.0
	2100	1268.0	5766	217.5	328.7
	1900	1268.0	6373	216.3	326.9
	1800	1268.0	6727	217.1	328.1
	1600	1161.0	6929	210.3	291.0
	1500	1068.0	6799	208.3	265.2
	1300	770.0	5656	209.4	192.2
	1100	419.0	3637	214.4	107.1
	900	283.0	3003	209.9	70.8
	800	241.0	2877	210.0	60.3
Prop Demand Data	2300	1268.0	5265	222.5	336.3
	2200	1109.7	4817	219.2	290.0
	2100	965.1	4389	215.2	247.6
	1900	714.8	3593	210.0	178.9
	1800	607.8	3224	212.0	153.6
	1600	426.9	2548	212.8	108.3
	1500	351.7	2239	214.9	90.1
	1300	229.0	1682	215.7	58.9
	1100	138.7	1204	221.3	36.6
	900	76.0	806	237.3	21.5
	800	53.4	637	249.2	15.9

Cubic prop demand curve with 3.0 exponent for displacement hulls only.

English | Maximum Power — | Prop Demand — — | **1700 hp**

Performance Data

	Engine Speed rpm	Engine Power hp	Engine Torque lb-ft	BSFC lb/hp-hr	Fuel Rate gph
Maximum Power Data	2300	1700.4	3883	.366	88.8
	2200	1700.4	4059	.362	88.0
	2100	1700.4	4253	.358	86.8
	1900	1700.4	4700	.356	86.4
	1800	1700.4	4961	.357	86.7
	1600	1556.9	5110	.346	76.9
	1500	1432.2	5014	.342	70.1
	1300	1032.6	4171	.344	50.8
	1100	561.9	2682	.352	28.3
	900	379.5	2215	.345	18.7
	800	323.2	2122	.345	15.9
Prop Demand Data	2300	1700.4	3883	.366	88.8
	2200	1488.1	3553	.360	76.6
	2100	1294.2	3237	.354	65.4
	1900	958.6	2650	.345	47.3
	1800	815.1	2378	.349	40.6
	1600	572.5	1879	.350	28.6
	1500	471.6	1651	.353	23.8
	1300	307.1	1241	.355	15.6
	1100	186.0	888	.364	9.7
	900	101.9	594	.390	5.7
	800	71.6	470	.410	4.2

Power produced at the flywheel will be within standard tolerances up to 50°C (122°F) combustion air temperature measured at the air cleaner inlet, and fuel temperature up to 52°C (125°F) measured at the fuel filter base. Power rated in accordance with NMMA procedure as crankshaft power. Reduce crankshaft power by 3% for propeller shaft power.

© 2009 Caterpillar All Rights Reserved

C32 DITA ACERT Performance Data

1825 mhp (1800 bhp) 1342 bkW @ 2300 rpm

IMO/EPA Tier 2 Compliant

E Rating — EM0030-00

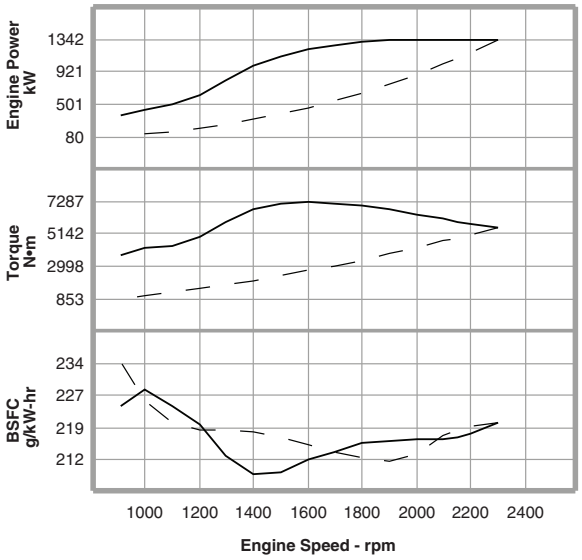

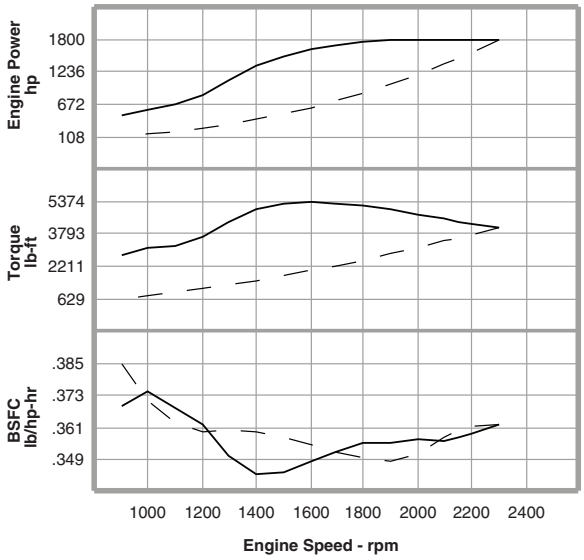

Metric | Maximum Power ——— | Prop Demand — — | **1342 kW**

Performance Data

	Engine Speed rpm	Engine Power kW	Engine Torque N•m	BSFC g/kW-hr	Fuel Rate L/hr
Maximum Power Data	2300	1342.0	5572	220.6	352.9
	2200	1342.0	5825	218.2	349.0
	2150	1342.0	5961	217.0	347.2
	2000	1342.0	6408	216.6	346.6
	1900	1342.0	6745	216.0	345.5
	1700	1269.0	7128	213.8	323.4
	1600	1221.0	7287	211.9	308.3
	1400	999.0	6814	208.7	248.5
	1200	624.0	4966	220.4	163.9
	1000	437.0	4173	228.0	118.7
	900	346.0	3671	224.5	92.6
Prop Demand Data	2300	1342.0	5572	220.6	352.9
	2200	1174.5	5098	219.9	307.9
	2150	1096.2	4869	219.1	286.3
	2000	882.4	4213	213.4	224.4
	1900	756.5	3802	211.5	190.8
	1700	541.9	3044	213.7	138.0
	1600	451.8	2696	215.5	116.0
	1400	302.7	2064	218.7	78.9
	1200	190.6	1517	218.8	49.7
	1000	110.3	1053	225.7	29.7
	900	80.4	853	234.2	22.4

Cubic prop demand curve with 3.0 exponent for displacement hulls only.

English | Maximum Power ——— | Prop Demand — — | **1800 hp**

Performance Data

	Engine Speed rpm	Engine Power hp	Engine Torque lb-ft	BSFC lb/hp-hr	Fuel Rate gph
Maximum Power Data	2300	1799.7	4109	.363	93.2
	2200	1799.7	4296	.359	92.2
	2150	1799.7	4396	.357	91.7
	2000	1799.7	4726	.356	91.6
	1900	1799.7	4975	.355	91.3
	1700	1701.8	5257	.351	85.4
	1600	1637.4	5374	.348	81.4
	1400	1339.7	5025	.343	65.6
	1200	836.8	3663	.362	43.3
	1000	586.0	3078	.375	31.4
	900	464.0	2707	.369	24.5
Prop Demand Data	2300	1799.7	4109	.363	93.2
	2200	1575.0	3760	.362	81.3
	2150	1470.0	3591	.360	75.6
	2000	1183.3	3107	.351	59.3
	1900	1014.5	2804	.348	50.4
	1700	726.7	2245	.351	36.5
	1600	605.9	1988	.354	30.6
	1400	405.9	1522	.360	20.8
	1200	255.6	1119	.360	13.1
	1000	147.9	777	.371	7.8
	900	107.8	629	.385	5.9

Power produced at the flywheel will be within standard tolerances up to 50°C (122°F) combustion air temperature measured at the air cleaner inlet, and fuel temperature up to 52°C (125°F) measured at the fuel filter base. Power rated in accordance with NMMA procedure as crankshaft power. Reduce crankshaft power by 3% for propeller shaft power.

© 2009 Caterpillar All Rights Reserved

C32 DITA ACERT Performance Data

1925 mhp (1900 bhp) 1417 bkW @ 2300 rpm

IMO/EPA Tier 2 Compliant

E Rating — DM8520-00

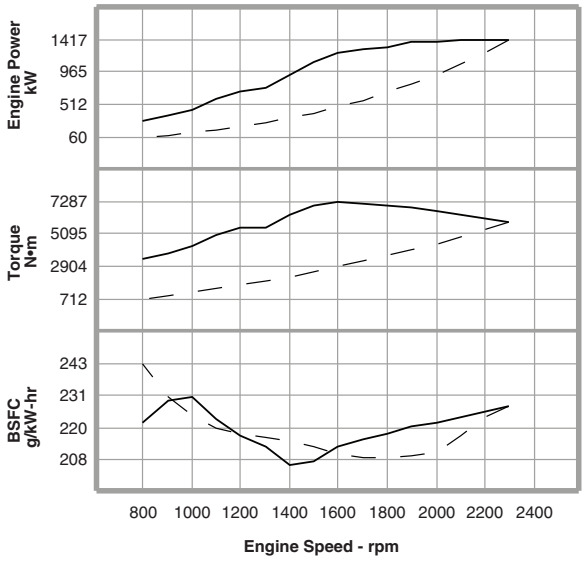

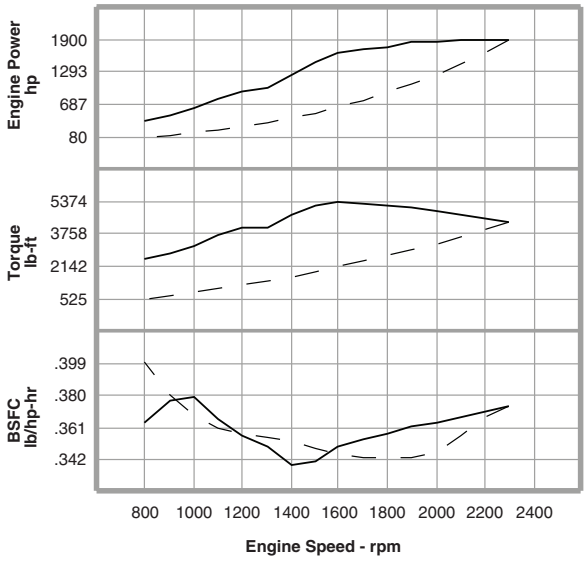

Metric | Maximum Power — | Prop Demand — — | **1417 kW**

Performance Data

	Engine Speed rpm	Engine Power kW	Engine Torque N•m	BSFC g/kW-hr	Fuel Rate L/hr
Maximum Power Data	2300	1417.0	5883	227.3	383.9
	2200	1409.0	6116	225.4	378.5
	2100	1410.0	6412	223.3	375.3
	1900	1377.0	6921	220.3	361.6
	1800	1320.0	7003	217.4	342.0
	1600	1221.0	7287	212.3	308.9
	1500	1098.0	6990	206.9	270.8
	1300	746.0	5480	212.5	188.9
	1100	578.0	5018	222.6	153.3
	900	360.0	3820	229.3	98.4
	800	287.0	3426	221.6	75.8
Prop Demand Data	2300	1417.0	5883	227.3	383.9
	2200	1240.1	5383	223.6	330.5
	2100	1078.6	4905	217.0	278.9
	1900	798.8	4015	208.7	198.8
	1800	679.2	3603	208.2	168.5
	1600	477.0	2847	209.8	119.3
	1500	393.1	2502	212.0	99.4
	1300	255.9	1880	215.7	65.8
	1100	155.0	1346	219.6	40.6
	900	84.9	901	231.3	23.4
	800	59.6	712	243.0	17.3

Cubic prop demand curve with 3.0 exponent for displacement hulls only.

English | Maximum Power — | Prop Demand — — | **1900 hp**

Performance Data

	Engine Speed rpm	Engine Power hp	Engine Torque lb-ft	BSFC lb/hp-hr	Fuel Rate gph
Maximum Power Data	2300	1900.2	4339	.374	101.4
	2200	1889.5	4511	.371	100.0
	2100	1890.8	4729	.367	99.1
	1900	1846.6	5104	.362	95.5
	1800	1770.1	5165	.357	90.3
	1600	1637.4	5374	.349	81.6
	1500	1472.4	5155	.340	71.5
	1300	1000.4	4042	.349	49.9
	1100	775.1	3701	.366	40.5
	900	482.8	2817	.377	26.0
	800	384.9	2527	.364	20.0
Prop Demand Data	2300	1900.2	4339	.374	101.4
	2200	1663.0	3970	.368	87.3
	2100	1446.4	3618	.357	73.7
	1900	1071.2	2961	.343	52.5
	1800	910.8	2657	.342	44.5
	1600	639.7	2100	.345	31.5
	1500	527.2	1845	.349	26.3
	1300	343.2	1387	.355	17.4
	1100	207.9	993	.361	10.7
	900	113.9	665	.380	6.2
	800	79.9	525	.399	4.6

Power produced at the flywheel will be within standard tolerances up to 50°C (122°F) combustion air temperature measured at the air cleaner inlet, and fuel temperature up to 52°C (125°F) measured at the fuel filter base. Power rated in accordance with NMMA procedure as crankshaft power. Reduce crankshaft power by 3% for propeller shaft power.

© 2009 Caterpillar All Rights Reserved

C32 ACERT™ MARINE PROPULSION

1470-1925 mhp (1450-1900 bhp)
1081-1417 bkW

DIMENSIONS

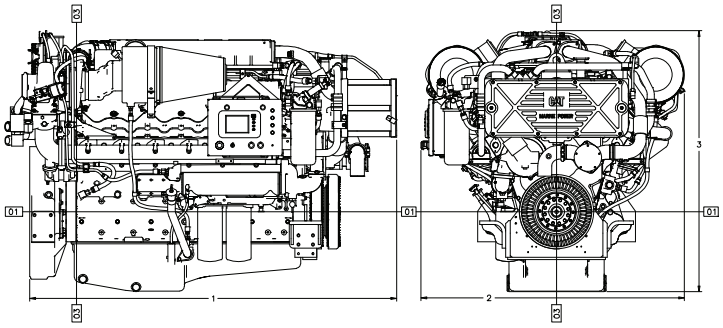

Engine Dimensions (approximate) 1825, 1925 mhp (1800, 1900 bhp)		
(1) Length (flywheel housing)	2008 mm	79.05 in
(2) Width (RH)	1443.5 mm	56.83 in
(LH)	1495.2 mm	58.87 in
(3) Height	1429.7 mm	56.29 in
Weight, Net Dry (approx)	3152 kg	6949 lb

Note: Do not use for installation design. See general dimension drawings for detail (#335-8003).

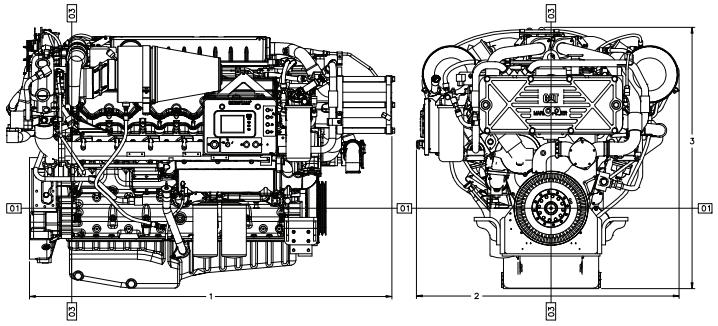

Engine Dimensions (approximate) 1470, 1622, 1723 mhp (1450, 1600, 1700 bhp)		
(1) Length (flywheel housing)	1999 mm	78.7 in
(2) Width (RH)	1486 mm	58.5 in
(3) Height	1430 mm	56.3 in
Weight, Net Dry (approx)	2994 kg	6600 lb

Note: Do not use for installation design. See general dimension drawings for detail (#335-8006).

RATING DEFINITIONS AND CONDITIONS

C Rating (Maximum Continuous)
Typical applications: For vessels operating at rated load and rated speed up to 50% of the time, or 6 hours out of 8, with cyclical load and speed (20% to 80% load factor). Typical applications could include but are not limited to vessels such as ferries, harbor tugs, fishing boats, offshore service boats, displacement hull yachts, or short trip coastal freighters. Typical operation ranges from 2000 to 4000 hours per year.

D Rating (Intermittent Duty)
Typical applications: For vessels operating at rated load and rated speed up to 16% of the time, or 2 hours out of 8, (up to 50% load factor). Typical applications could include but are not limited to vessels such as offshore patrol boats, customs boats, police boats, some fishing boats, fireboats, or harbor tugs. Typical operation ranges from 1000 to 3000 hours per year.

E Rating (High Performance)
Typical applications: For vessels operating at rated load and rated speed up to 8% of the time, or 1/2 hour out of 6, (up to 30% load factor). Typical applications could include but are not limited to vessels such as pleasure craft, harbor patrol boats, harbor master boats, some fishing or patrol boats. Typical operation ranges from 250 to 1000 hours per year.

Power at declared engine speed is in accordance with ISO3046-1:2002E. Caterpillar maintains ISO9001:1994/QS-9000 approved engine test facilities to assure accurate calibration of test equipment. Electronically controlled engines are set at the factory at the advertised power corrected to standard ambient conditions. The published fuel consumption rates are in accordance with ISO3046-1:2002E.

Fuel rates are based on fuel oil of 85° API [16°C (60°F)] gravity having an LHV of 42 780 kJ/kg (18,390 Btu/lb) when used at 29°C (85°F) and weighing 838.9 g/L (7.001 lb/U.S. gal). Additional ratings may be available for specific customer requirements. Consult your Caterpillar representative for additional information.

Performance data is calculated in accordance with tolerances and conditions stated in this specification sheet and is only intended for purposes of comparison with other manufacturers' engines. Actual engine performance may vary according to the particular application of the engine and operating conditions beyond Caterpillar's control.

Power produced at the flywheel will be within standard tolerances up to 49°C (120°F) combustion air temperature measured at the air cleaner inlet, and fuel temperature up to 52°C (125°F) measured at the fuel filter base. Power rated in accordance with NMMA procedure as crankshaft power. Reduce crankshaft power by 3% for propeller shaft power.

CAT, CATERPILLAR, their respective logos, ACERT, "Caterpillar Yellow" and the POWER EDGE trade dress, as well as corporate and product identity used herein, are trademarks of Caterpillar and may not be used without permission.

TMI Reference No.: EM0048-00, EM0047-00, EM0029-00, EM0030-00, DM8520-00
LEHM8960-02 (2-09)

©2009 Caterpillar
All rights reserved.
Materials and specifications are subject to change without notice.
The International System of Units (SI) is used in this publication.