Crankcase Cover

RP6500E / RP7500E

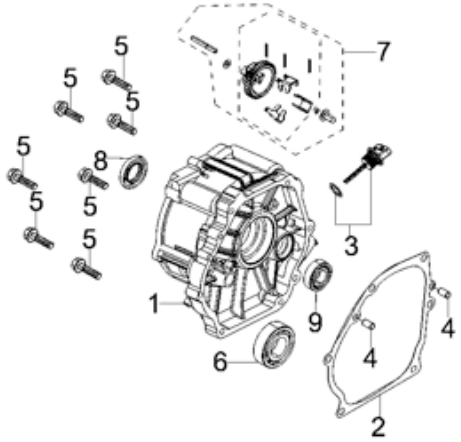

						Part Dim (mm)										Group Dim (mm)			
REF. NO.	DESCRIPTION	Part QTY	Part UPC	CAT Individual Part No.	MSRP Part Price	Length	Width	Height	Weight(g)	Group QTY	Group UPC	CAT Group Part No.	Group Name	MSRP Group Price	MODEL	Length	Width	Height	Weight(g)
1	COVER, CRANKCASE	1								1	815683021835	512-8290	COVER GP-REAR	$79.88	RP6500E/7500E	300	250	150	1606
2	GASKET, CRANKCASE	1	815683021361	511-7243	$3.87	270	215	1	4.5										
4	PIN	2																	
5	BOLT	7																	
6	BEARING, DEEP GROOVE BALL	1								1	815683021842	512-8291	BEARING GP -B	$64.05	RP6500E/7500E	80	80	50	335
8	SEAL, OIL	1																	
9	BEARING, DEEP GROOVE BALL	1																	
3	DIPSTICK SUBASSEMBLY, OIL	1	815683021378	501-5087	$2.82	86	37	31	20						RP5500/ RP6500E/7500E				
7	GEAR ASSY, GOVERNOR	1	815683021385	511-8847	$22.60	65	60	60	62.8										

© 2016 Caterpillar. All Rights Reserved.
CAT, CATERPILLAR, their respective logos, “Caterpillar Yellow,” the “Power Edge” trade dress, as well as corporate and product identity used herein, are trademarks of Caterpillar and may not be used without permission.