Frame Assembly

RP3600

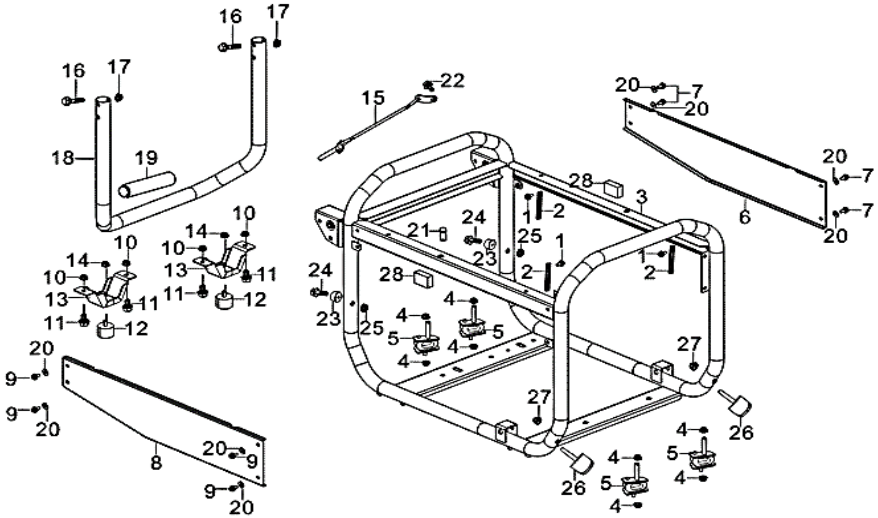

REF. NO.	DESCRIPTION	Part QTY	Part UPC	CAT Individual Part No.	MSRP Part Price	Group QTY	Group UPC	CAT Group Part No.	Group Name	MSRP Group Price	MODEL	Group Dim(mm) Length	Group Dim(mm) Width	Group Dim(mm) Height	Group Dim(mm) Weight(g)	Part Dim (mm) Length	Part Dim (mm) Width	Part Dim (mm) Height	Part Dim (mm) Weight(g)
1	BOLT	2																	
2	CLIP	2																	
3	FRAME ASSY	1																	
21	PROTECT RUBBER	1																	
22	BOLT	2																	
23	ISOLATOR	2				1	815683020661	512-8248	FRAME GP	$82.96	RP3600	665	445	520	6000				
24	HEX BOLT	2																	
25	NYLON NUT	2																	
26	RUBBER CUSHION	2																	
27	CAP NUT	2																	
28	SOUND ABSORBING COTTON	2																	
4	NUT	8				1	815683020678	512-8249	ISOLATOR GP	$4.35	RP3600	77	37	45	326.6				
5	ISOLATER, FRAME	4																	
6	RIGHT SIDE PANEL	1																	
7	BOLT	4				1	815683020685	512-8250	COVER GP-RH	$20.52	RP3600	542	113	19	901.8				
20	WASHER	8																	

Frame Assembly

RP3600

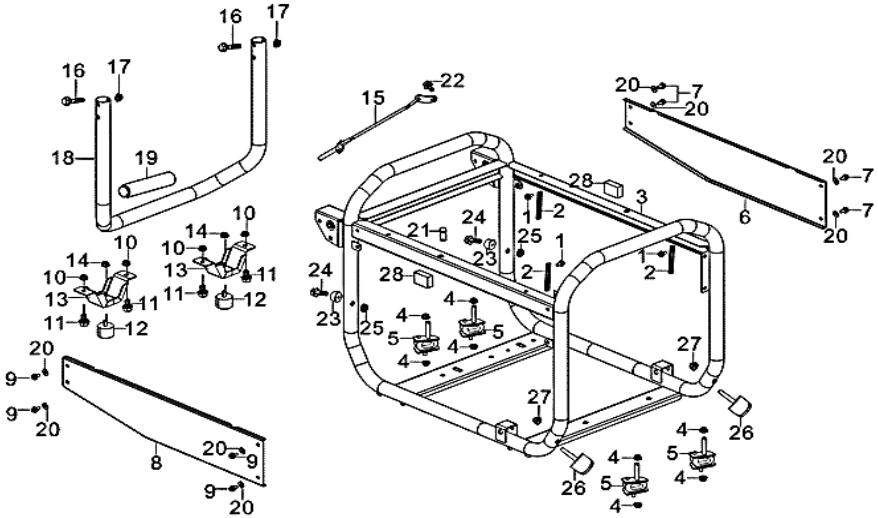

REF. NO.	DESCRIPTION	Part QTY	Part UPC	CAT Individual Part No.	MSRP Part Price	Group QTY	Group UPC	CAT Group Part No.	Group Name	MSRP Group Price	MODEL	Group Dim(mm) Length	Group Dim(mm) Width	Group Dim(mm) Height	Group Dim(mm) Weight(g)	Part Dim (mm) Length	Part Dim (mm) Width	Part Dim (mm) Height	Part Dim (mm) Weight(g)
8	LEFT SIDE PANEL	1				1	815683020692	512-8251	COVER GP-LH	$20.52	RP3600	542	113	19	901.8				
9	BOLT	4																	
20	WASHER	8																	
10	NUT	4				1	815683020708	512-8252	SUPPORT GP-FRAME	$5.70	RP3600	155	92	53	802.4				
11	BOLT	4																	
12	FOOT, FRAME SUPPORT BRACKET	2																	
13	SUPPORT BRACKET, FRAME	2																	
14	NUT	2																	
15	LOCK PIN	1				1	815683020715	512-8253	BRACKET GP-D	$20.06	RP3600	455	455	375	1108.1				
16	BOLT	2																	
17	NUT	2																	
18	HANDLE	1																	
19	FOAM,HANDLE	1																	

© 2016 Caterpillar. All Rights Reserved.
CAT, CATERPILLAR, their respective logos, “Caterpillar Yellow,” the “Power Edge” trade dress, as well as corporate and product identity used herein, are trademarks of Caterpillar and may not be used without permission.