Perkins Sabre M215C and M225Ti Marine Diesel Engine
shown with Hurth HSW 630A gearbox with reduction ratios
up to and including 2:1 (550mm transverse mounting centres)

CATERPILLAR MARINE POWER UK LTD
Wimborne, Dorset, England.
Tel. +44(0)1202 893720
Fax. +44(0)1202 851700
E-mail. Wimborne_MPC_post@cat.com
www.Perkins-Sabre.com

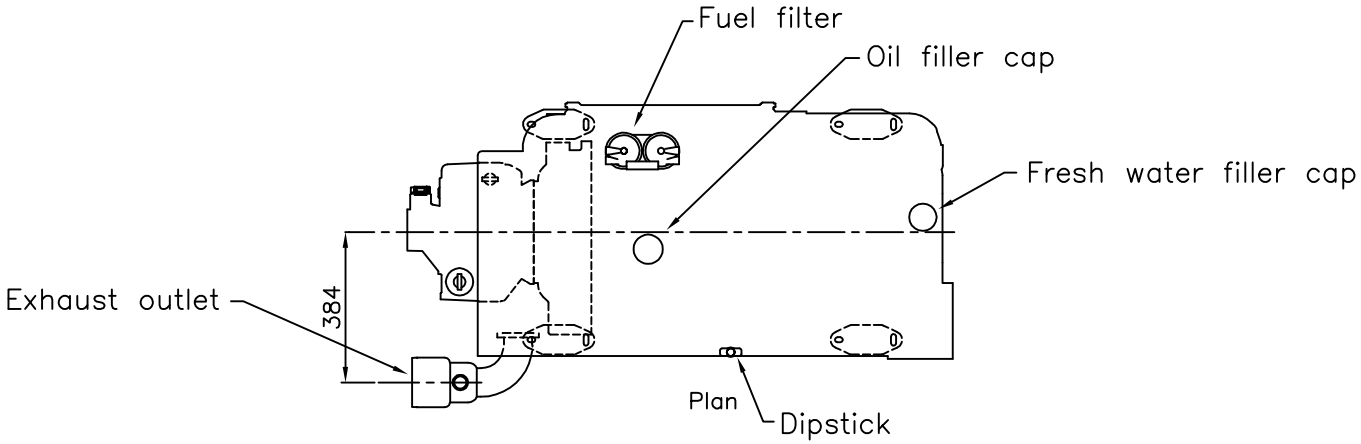

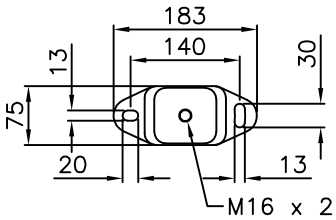

FLEXIBLE ENGINE MOUNT

Weights on each mount:
Front – 165kg per mount
Back – 174kg per mount
Total Wet Weight – 678kg

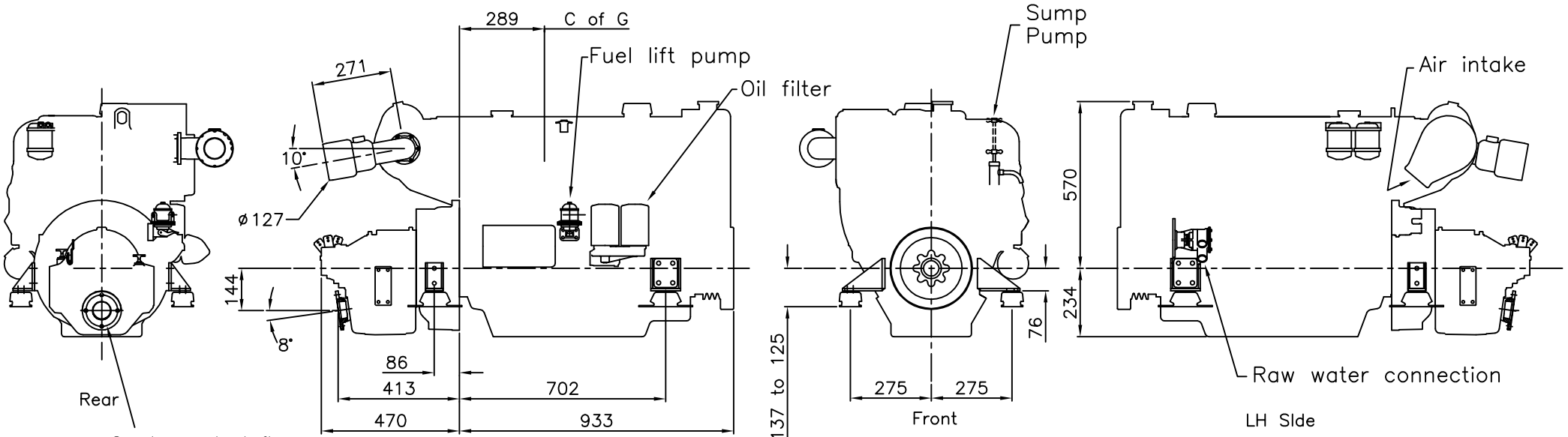

Doc No. 7052-7-00