815F Series 2

Soil Compactor

Joint Services

Cat® C9 ACERT™ Engine		
Gross Power	189 kW	253 hp
Net Power	173 kW	232 hp

Weight		
Operating Weight	20 775 kg	45,765 lb

Shipping Specifications		
Weight	29 345 kg	44,853 lb

MISSION CAPABLE

The Cat® 815F Series 2 Soil Compactor – Tested, Proven, and Reliable – Mission Capable

The Cat 815F Series 2 Soil Compactor is equipped with the Cat C9 engine with ACERT™ Technology combined with a planetary powershift transmission, offering superior performance and reliability in heavy duty compaction applications. The machine also provides reliable operational readiness for the construction of airfields, roads, landing zones, defensive berms, anti-tank ditches, and other key military construction missions.

The 815F Series 2 is designed with transportability in mind, incorporating MIL-STD-209K lift and tiedown modifications as well as C5/C17 air transport capability in a drive-on, drive-off configuration.

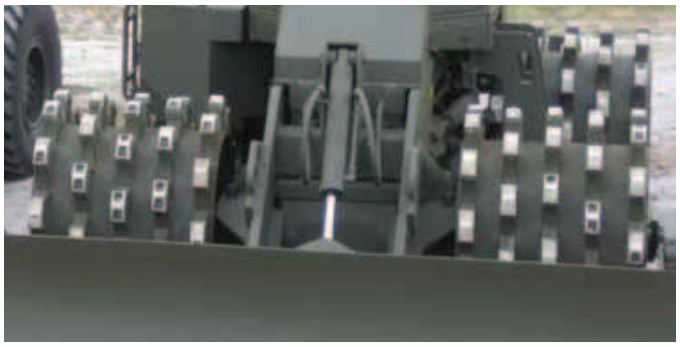

Wheel Design. The four wheel compaction design gives the machine full width coverage in just two passes with front and rear wheel tracking that eliminates gaps and overlaps. The tamping wheels, with a modified chevron pattern for the tips, offer greater traction, penetration and compaction for high production. The new cast bases also make cleaning the wheels easier when moving the 815F Series 2 to a new work site.

Compaction is achieved from the bottom of the lift to the top. The tapered pads walk out of the lift. The top of the lift is compacted and the surface is relatively smooth and sealed so hauling units are able to maintain high speed when traveling over the fill. The 815F Series 2 travel speed allows for four forces of compaction: pressure, manipulation, impact and vibration. Since it can also spread fill, the number of spreader tractors may be able to be reduced.

Cleaner Bars help keep the drums free of carry-over debris regardless of rolling direction. A pass-through design allows for easier serviceability. The adjustable cleaner bar tips are constructed from cutting edge steel that is heat treated and direct hardened, which increases the wear life and translates into lower operating costs.

Blade. Designed for general dozing, road grading, spreading and clean-up work, the 815F Series 2 pilot-operated blade controls are conveniently located and allow for precise blade movement.

Machine Dimensions

1	Height to Top of Cab	3347 mm	10 ft 12 in
2	Height to Top of Exhaust Pipe	3325 mm	10 ft 7 in
3	Height to Top of Hood	2395 mm	7 ft 11 in
4	Height to Rear Bumper	770 mm	2 ft 7 in
5	Center Line of Rear Axle to Edge of Rear Bumper	1871 mm	6 ft 2 in
6	Center Line of Rear Axle to Hitch	1675 mm	5 ft 6 in
7	Wheelbase	3350 mm	10 ft 12 in
8	Length with Blade on Ground	6845 mm	22 ft 6 in
9	Ground Clearance	390 mm	1 ft 4 in

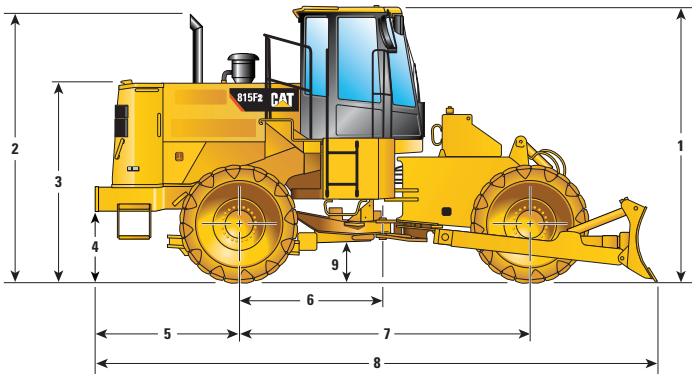

Worldwide Locations. The Caterpillar global network of authorized dealers supports the U.S. Military in every corner of the globe. With heavy construction equipment dealers located in over 200 countries, Caterpillar's support organization provides global coverage.

Service Capabilities. Cat field service technicians have the experience and tools necessary to service your equipment on-site. Field service trucks are fully loaded with state-of-the-art tools and diagnostic equipment as well as specifications and schematics for every Cat machine. Technical experts at the Dealership and at Caterpillar are available to provide assistance to field service technicians when needed. When on-site repair isn't enough, Cat Dealerships are fully-equipped to service your equipment quickly.

Dealer Support. The Caterpillar global network of authorized dealers is the best in the world at providing support to keep your equipment up and running. With 99.7% of parts shipped within 24 hrs, Cat Dealers are supporting the 815F Series 2 Soil Compactor.

Engine

Engine Model	Cat® C9 ACERT™	
Gross Power	189 kW	253 hp
Net Power	173 kW	232 hp
ISO 3046-2	173 kW	232 hp
ISO 9249	175 kW	235 hp
SAE J1349	173 kW	232 hp
EEC 80/1269	175 kW	235 hp
Torque Rise	30%	
Bore	112 mm	4.4 in
Stroke	149 mm	5.9 in
Displacement	8.8 L	537 in^3
Cylinders	6	

Transmission

Forward 1	6.2 km/h	3.9 mph
Forward 2	10.7 km/h	6.7 mph
Forward 3	17.6 km/h	11 mph
Reverse 1	7 km/h	4.4 mph
Reverse 2	12.1 km/h	7.6 mph
Reverse 3	19.5 km/h	12.2 mph

Service Refill Capacities

Fuel Tank	446 L	117.8 gal
Cooling System	55 L	14.5 gal
Crankcase	34 L	9 gal
Transmission	50 L	13.2 gal
Differentials and Final Drives-Front	65 L	17.1 gal
Differentials and Final Drives-Rear	65 L	17.1 gal
Hydraulic Tank	88 L	23.2 gal

Steering

Steering Angle	±42°

Weights

Drum Width	991 mm	3 ft 3 in
Drum Diameter	1029 mm	3 ft 5 in
Outside Diameter	1425 mm	4 ft 9 in
Tips per Wheel	60	
Tips per Row	12	

Remanufactured Parts. Cat engines and major components are designed to be remanufactured and provide multiple life cycles. Components are remanufactured in the factory to original specifications with necessary product updates.

MILITARY MODIFICATIONS

- **MIL-STD-209K Lift and Tiedown Provisions**
- **NATO Start Receptacle**
- **Rifle Bracket**
- **Military Data Plates**
- **External Military Paint**
- **C17 and C5 RO/RO Air Transportable**
- **Keyless Engine Start Switch**

STANDARD EQUIPMENT

Standard equipment may vary. Consult Caterpillar Defense & Federal Products for details.

Operator Environment

Blade control system locks

Cab, pressurized and sound suppressed (ROPS/FOPS), includes antenna, speakers and converter (12-volt, 10-15 amp)

Coat hook

Cigar lighter and ashtray

Cat Monitoring System: Instrumentation, Gauges
- Engine coolant temperature
- Fuel level
- Hydraulic oil temperature
- Speedometer/Tachometer
- Transmission oil temperature

Instrumentation, Warning Indicators
- Air inlet temperature
- Brake oil pressure
- Electrical system, low voltage
- Engine oil pressure
- Engine over-speed
- Fuel filter status
- Parking brake status
- Steering oil pressure
- Transmission filter status

Dome light (cab)

Fuses, blade style (in-cab)

Heater and defroster

Horn, electric (steering wheel mounted)

Hydraulic steering

Lunchbox and beverage holders

Mirrors, rearview (interior mounted)

Seat, mechanical suspension

Seat belt, retractable, 76 mm (3 in) wide

Steering column, adjustable

Wet-arm wipers/washers (front and rear)

Electrical

Alarm, backup

Alternator, (80 amp)

Batteries, maintenance-free, (2)

Diagnostic connectors

Lighting system, halogen (front, rear and cab-mounted)

Starting and charging system (24-volt)

Starting receptacle for emergency starts

Powertrain

Brakes, fully hydraulic, enclosed, wet-disc

Engine, Cat® C9 ACERT™

Fuel priming pump

Muffler

Radiator, Next Generation Modular (NGMR)

Starting aid (ether)

Torque converter

Transmission, planetary (3 forward/ 3 reverse speeds)
- Electronic Clutch Pressure Control

Other Standard Equipment

Cat O-ring face seals/couplings

XT™ hoses

Guards
- Crankcase
- Powertrain
- Parking brake
- Radiator
- Drive shaft

Hood, metallic with lockable service doors

Hitch, drawbar with pin

Hydraulic oil cooler

Oil sampling valves

Trunnion

Tamper wheels

Vandalism protection caplocks

Bulldozers

Bulldozer blade, hydraulics and linkage are not included in standard equipment

Antifreeze

Premixed 50 percent concentration of Extended Life Coolant with freeze protection to –34 C (-29 F)

All dimensions are approximate. Dimensions may vary with configuration. Specific military service configurations are available upon request.

For more information visit: **www.catdfp.com**

© 2010 Caterpillar | All Rights Reserved | Printed in the USA

Materials and specifications are subject to change without notice. Featured machines may include additional equipment. See your account manager for available options.

CAT, CATERPILLAR, their respective logos, "Caterpillar Yellow" and the Power Edge trade dress, as well as corporate and product identity used herein, are trademarks of Caterpillar and may not be used without permission.